brother

Brother Laser MFC

SERVICE MANUAL

MODEL:

DCP-8110D / 8110DN
DCP-8112DN / 8150DN / 8152DN
DCP-8155DN / 8157DN / 8250DN
MFC-8510DN / 8512DN / 8515DN
MFC-8520DN / 8710DW / 8712DW
MFC-8810DW / 8910DW / 8912DW / 8950DW
MFC-8950DWT / 8952DW / 8952DWT

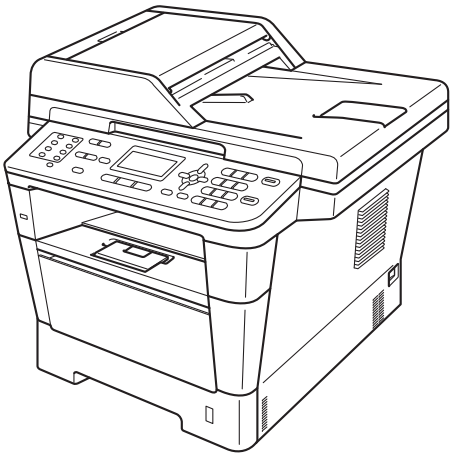

Read this manual thoroughly before maintenance work.
Keep this manual in a convenient place for quick and easy reference at all times.

March 2012
SM-FAX135
8C5F01
(5)

Confidential

The function comparative table for models as described in this Service Manual are shown below.

Model	DCP-8110D	DCP-8110DN	DCP-8112DN	DCP-8150DN
LCD	5-line	5-line	5-line	5-line
Touch panel	N/A	N/A	N/A	N/A
Wired/Wireless LAN	N/A	Wired	Wired	Wired
Scan	One-sided	One-sided	One-sided	One-sided
Scanning size	A4	A4	A4	Legal
Paper capacity (Paper tray 1)	250 sheets	250 sheets	250 sheets	250 sheets
NCU	N/A	N/A	N/A	N/A

Model	DCP-8152DN	DCP-8155DN	DCP-8157DN	DCP-8250DN
LCD	5-line	5-line	5-line	5-inch Color
Touch panel	N/A	N/A	N/A	✓
Wired/Wireless LAN	Wired	Wired	Wired	Wired
Scan	One-sided	Two-sided	Two-sided	Two-sided
Scanning size	Legal	Legal	Legal	Legal
Paper capacity (Paper tray 1)	250 sheets	250 sheets	250 sheets	500 sheets
NCU	N/A	N/A	N/A	N/A

Model	MFC-8510DN	MFC-8512DN	MFC-8515DN	MFC-8520DN
LCD	5-line	5-line	5-line	5-line
Touch panel	N/A	N/A	N/A	N/A
Wired/Wireless LAN	Wired	Wired	Wired	Wired
Scan	One-sided	One-sided	One-sided	Two-sided
Scanning size	A4	A4	A4	A4
Paper capacity (Paper tray 1)	250 sheets	250 sheets	250 sheets	250 sheets
NCU	✓	✓	✓	✓

Model	MFC-8710DW	MFC-8712DW
LCD	5-line	5-line
Touch panel	N/A	N/A
Wired/Wireless LAN	Wired/Wireless	Wired/Wireless
Scan	One-sided	One-sided
Scanning size	Legal	Legal
Paper capacity (Paper tray 1)	250 sheets	250 sheets
NCU	✓	✓

Model	MFC-8810DW	MFC-8910DW	MFC-8912DW
LCD	5-line	5-line	5-line
Touch panel	N/A	N/A	N/A
Wired/Wireless LAN	Wired/Wireless	Wired/Wireless	Wired/Wireless
Scan	Two-sided	Two-sided	Two-sided
Scanning size	Legal	Legal	Legal
Paper capacity (Paper tray 1)	250 sheets	250 sheets	250 sheets
NCU	✓	✓	✓

Model	MFC-8950DW	MFC-8950DWT	MFC-8952DW	MFC-8952DWT
LCD	5-inch Color	5-inch Color	5-inch Color	5-inch Color
Touch panel	✓	✓	✓	✓
Wired/Wireless LAN	Wired/Wireless	Wired/Wireless	Wired/Wireless	Wired/Wireless
Scan	Two-sided	Two-sided	Two-sided	Two-sided
Scanning size	Legal	Legal	Legal	Legal
Paper capacity (Paper tray 1)	500 sheets	500 sheets	500 sheets	500 sheets
Speaker	✓	✓	✓	✓
NCU	✓	✓	✓	✓

© Copyright Brother 2012

All rights reserved.

No part of this publication may be reproduced in any form or by any means without permission in writing from the publisher.

All other product and company names mentioned in this manual are trademarks or registered trademarks of their respective holders.

Specifications are subject to change without notice.

TRADEMARKS

The Brother logo is a registered trademark of Brother Industries, Ltd.

Brother is a registered trademark of Brother Industries, Ltd.

Multi-Function Link is a registered trademark of Brother International Corporation.

Windows Vista is either a registered trademark or trademark of Microsoft Corporation in the United States and/or other countries.

Microsoft, Windows, Windows Server, Outlook and Internet Explorer are registered trademarks of Microsoft Corporation in the United States and/or other countries.

Apple and Macintosh are trademarks of Apple Inc., registered in the United States and other countries. AirPrint is a trademark of Apple Inc.

Adobe, Flash, Illustrator, PageMaker and Photoshop are either registered trademarks or trademarks of Adobe Systems Incorporated in the United States and/or other countries.

Nuance, the Nuance logo, PaperPort and ScanSoft are trademarks or registered trademarks of Nuance Communications, Inc. or its affiliates in the United States and/or other countries.

PowerPC is a trademark of International Business Machines Corporation.

Memory Stick, Memory Stick PRO, Memory Stick PRO Duo, Memory Stick Duo, MagicGate Memory Stick, Memory Stick Micro and M2 are trademarks of Sony Corporation.

AOSS is a trademark of Buffalo Inc.

Wi-Fi, WPA, WPA2, Wi-Fi Protected Access and Wi-Fi Protected Setup are either trademarks or registered trademarks of Wi-Fi Alliance in the United States and/or other countries.

Intel and Pentium are trademarks of Intel Corporation in the U.S. and other countries.

AMD is a trademark of Advanced Micro Devices, Inc.

FaceFilter Studio is a trademark of Reallusion, Inc.

BRAdmin Professional is a trademark of Brother Industries, Ltd.

UNIX is a registered trademark of The Open Group in the United States and other countries.

Linux is the registered trademark of Linus Torvalds in the U.S. and other countries.

Corel and CorelDRAW are trademarks or registered trademarks of Corel Corporation and/or its subsidiaries in Canada, the United States and/or other countries.

Each company whose software title is mentioned in this manual has a Software License Agreement specific to its proprietary programs.

Any trade names and product names of companies appearing on Brother products, related documents and any other materials are all trademarks or registered trademarks of those respective companies.

Google Docs, Android and Gmail are trademarks of Google Inc.

CONTENTS

SAFETY INFORMATION viii

CHAPTER 1 SPECIFICATIONS

1. SPECIFICATIONS LIST 1-1

1.1 General 1-1
1.2 Network Connectivity 1-6
1.3 Service Information 1-7
1.4 Supplies 1-8
1.5 Paper 1-10
1.5.1 Paper handling 1-10
1.5.2 Media specifications 1-11
1.5.3 Type and size of paper 1-11
1.6 Printable & Scannable Area 1-12
1.7 Telephone 1-12
1.8 FAX (Only for the models with FAX function) 1-13
1.9 Copy 1-13
1.10 Scanner 1-14
1.11 USB Direct Interface 1-14

CHAPTER 2 TROUBLESHOOTING

1. INTRODUCTION 2-1

1.1 Precautions 2-1
1.2 Checks before Commencing Troubleshooting 2-2

2. OVERVIEW 2-4

2.1 Cross-section Drawing 2-4
2.1.1 Printer part 2-4
2.1.2 ADF unit/Document scanner unit 2-5
2.2 Paper Feeding 2-7
2.2.1 Printer part 2-7
2.2.2 Scanning 2-8
2.3 Operation of Each Part 2-9
2.4 Block Diagram 2-11
2.5 Main Components 2-12
2.6 Life of Toner Cartridge and Drum Unit 2-13

3. ERROR INDICATIONS 2-18

3.1 Error Codes 2-18

3.2 Error Messages 2-24
3.3 Communication Errors 2-28

4. TROUBLESHOOTING 2-31

4.1 Error Cause and Remedy 2-31
4.2 Troubleshooting for Paper Feeding Problems 2-69
4.2.1 No paper is fed from each paper tray 2-69
4.2.2 Multiple sheets of paper are fed 2-70
4.2.3 Paper becomes wrinkled 2-70
4.2.4 Paper is fed at an angle 2-70
4.2.5 Paper is curled 2-71
4.2.6 Only single surface is printed in duplex printing mode 2-71
4.3 Troubleshooting for Image Defects 2-72
4.3.1 Image defect examples 2-72
4.3.2 Troubleshooting according to image defect 2-73
4.4 Troubleshooting for Software Problems 2-86
4.4.1 Cannot print data 2-86
4.5 Troubleshooting for Network Problems 2-87
4.5.1 Cannot print via network connection 2-87
4.6 Troubleshooting for Control Panel Problems 2-88
4.6.1 Nothing is displayed on the LCD 2-88
4.6.2 Control panel is inoperable 2-88
4.7 Troubleshooting for Toner and Drum Problems 2-89
4.7.1 New toner is not detected 2-89
4.7.2 Cartridge error (toner cartridge cannot be detected) 2-89
4.7.3 Drum error 2-89
4.8 Troubleshooting for Fuser Unit Problems 2-90
4.8.1 Fuser unit failure 2-90
4.9 Troubleshooting for Laser Unit Problems 2-91
4.9.1 Laser unit failure 2-91
4.10 Troubleshooting for PCB Problems 2-92
4.10.1 Main PCB failure 2-92
4.10.2 High-voltage power supply PCB failure 2-92
4.10.3 Low-voltage power supply PCB failure 2-92
4.10.4 Out of memory 2-92
4.11 Troubleshooting for Document Feeding Problems 2-93
4.11.1 Multiple sheets of document are fed 2-93
4.11.2 Document becomes wrinkled 2-93
4.11.3 Document size is not detected correctly 2-93
4.12 Troubleshooting for Image Defects 2-94
4.12.1 Defect examples 2-94
4.12.2 Troubleshooting according to image defect 2-94
4.13 Troubleshooting for Fax Problems 2-97
4.13.1 Fax cannot be sent 2-97
4.13.2 Fax cannot be received 2-97
4.13.3 Bell does not sound 2-97
4.13.4 Communication error occurs 2-97
4.14 Troubleshooting for Other Problems 2-98

4.14.1 Machine is not turned ON 2-98
4.14.2 Main fan does not rotate 2-98
4.14.3 Main motor failure 2-98
4.14.4 Unusual noise is generated from the machine 2-98
4.14.5 Malfunction of the memory 2-98

CHAPTER 3 DISASSEMBLY/REASSEMBLY

1. SAFETY PRECAUTIONS 3-1

2. PACKING 3-2

3. SCREW CATALOGUE 3-3

4. SCREW TORQUE LIST 3-4

5. LUBRICATION 3-7

6. OVERVIEW OF GEARS 3-10

7. HARNESS ROUTING 3-12

8. DISASSEMBLY FLOW CHART 3-20

9. DISASSEMBLY PROCEDURE 3-22

9.1 Preparation 3-22
9.2 Paper tray 1 3-23
9.3 Back cover / Outer chute 3-25
9.4 Fuser cover 3-26
9.5 MP cover ASSY 3-27
9.6 Front cover ASSY 3-28
9.7 Side cover L / Access cover 3-29
9.8 Side cover R ASSY 3-30
9.9 ADF unit 3-31
9.9.1 Hinge ASSY L 3-33
9.9.2 Hinge R 3-33
9.9.3 ADF document output support flap 3-34
9.9.4 Document sub tray 3-34
9.9.5 ADF cover ASSY 3-34
9.9.6 Gear cover 3-36
9.9.7 Document separate roller ASSY 3-37
9.9.8 ADF separation pad spring / ADF separation pad 3-38
9.9.9 Second side CIS unit / Second side CIS flat cable (duplex scanning models only) 3-41
9.9.10 Upper ADF chute 3-43
9.9.11 ADF cover/document detection sensor PCB ASSY / First side document scanning position sensor PCB ASSY / Second side document scanning position sensor PCB ASSY (duplex scanning models only) 3-45
9.9.12 Drive frame ASSY / Document feed roller ASSY 1 3-47
9.9.13 ADF motor ASSY 3-52
9.9.14 First side document hold 3-52

9.10 Panel cover / Printed panel cover 3-53
9.11 Document scanner unit 3-60
9.11.1 First side CIS unit 3-62
9.12 Joint cover 3-67
9.13 Wireless LAN PCB ASSY 3-68
9.14 USB host PCB ASSY 3-68
9.15 Speaker unit 3-69
9.16 NCU PCB ASSY 3-70
9.17 Main PCB ASSY 3-71
9.18 Fuser unit 3-73
9.19 Laser unit 3-76
9.20 Low-voltage power supply PCB ASSY 3-78
9.21 Toner LED PCB ASSY 3-81
9.22 Main fan 3-83
9.23 Air duct / Filter 3-85
9.24 Relay front PCB ASSY 3-86
9.25 Registration clutch / T1 clutch 3-87
9.26 Main frame L ASSY 3-88
9.27 Main motor ASSY 3-90
9.28 Develop joint gear 37 / Develop joint 3-92
9.29 LT drive gear 29 3-93
9.30 Toner sensor PCB ASSY 3-94
9.31 MP solenoid 3-95
9.32 Develop clutch 51R / Develop one way clutch 53 3-96
9.33 New toner actuator 3-97
9.34 Internal temperature thermistor 3-98
9.35 Fuser drive gear 39 3-99
9.36 Duplex solenoid 3-101
9.37 Back cover sensor 3-102
9.38 LT connector (T1) 3-103
9.39 T1 roller holder ASSY 3-104
9.40 High-voltage power supply PCB ASSY 3-105
9.41 Eject sensor PCB ASSY 3-108
9.42 MP roller holder ASSY / MP separation pad ASSY / MP separation pad spring 3-109
9.43 T1 paper feed sensor PCB ASSY / T1 paper feed actuator / T1 paper feed actuator spring 3-110
9.44 MP paper empty sensor PCB ASSY / MP paper empty actuator 1 / MP paper empty actuator 2 3-112
9.45 Registration front/rear sensor PCB ASSY / Registration front actuator / Registration rear actuator / Registration actuator spring 3-115

10. DISASSEMBLY PROCEDURE (LT UNIT) 3-118

10.1 Paper tray 2 3-118
10.2 T2 roller holder ASSY 3-120

10.3 T2 side cover L 3-121
10.4 T2 side cover R 3-122
10.5 T2 front cover ASSY 3-123
10.6 T2 relay PCB ASSY 3-124
10.7 T2 clutch 3-125
10.8 T2 paper feed sensor PCB ASSY 3-126
10.9 T2 back cover 3-130
10.10 LT connector ASSY (T2) 3-131

CHAPTER 4 ADJUSTING AND UPDATING SETTINGS AS REQUIRED AFTER PARTS REPLACEMENT

1. IF YOU REPLACE THE MAIN PCB ASSY 4-1
1.1 Installing Firmware 4-2
1.1.1 Checking firmware version 4-2
1.1.2 Installing firmware using USB flash memory 4-2
1.1.3 Installing firmware using PC 4-3
1.2 Setting by Country 4-3
1.3 Initializing the EEPROM of the Main PCB ASSY 4-3
1.4 Setting Serial Number and Entering Adjusted Value of Laser Unit 4-4
1.5 Acquiring White Level Data 4-5
1.6 Adjusting Touch Panel (Touch Panel Models Only) 4-5

2. IF YOU REPLACE THE LASER UNIT 4-6
2.1 Entering Adjusted Value of Laser Unit 4-7

3. IF YOU REPLACE THE LOW-VOLTAGE POWER SUPPLY PCB ASSY 4-9
3.1 Resetting Irregular Power Supply Detection Counter 4-9

4. IF YOU REPLACE THE HIGH-VOLTAGE POWER SUPPLY PCB ASSY 4-10
4.1 Initializing Pre-discharge Detection Parameters 4-10

5. IF YOU REPLACE ANY PERIODIC REPLACEMENT PARTS 4-11

6. IF YOU REPLACE THE CONTROL PANEL ASSY OR TOUCH PANEL ASSY 4-12
6.1 Installing Firmware (Touch Panel Models Only) 4-12
6.1.1 Checking firmware version 4-12
6.1.2 Installing firmware using USB flash memory 4-13
6.1.3 Installing firmware using PC 4-13
6.2 Adjusting Touch Panel (Touch Panel Models Only) 4-14
6.3 Checking LCD Operation 4-14
6.4 Checking Control Panel Operation 4-14

7. IF YOU REPLACE THE DOCUMENT SCANNER UNIT, ADF UNIT (DUPLEX SCANNING MODEL), OR CIS UNIT 4-15
7.1 Acquiring White Level Data (function code: 55) 4-15

Confidential

CHAPTER 5 SERVICE FUNCTIONS

1. MAINTENANCE MODE 5-1
1.1 How to Enter Maintenance Mode 5-1
1.1.1 Method of entering end-user accessible maintenance mode 5-1
1.1.2 Method of entering maintenance mode for service personnel 5-1
1.2 List of Maintenance Mode Functions 5-2
1.3 Details of Maintenance Mode Functions 5-3
1.3.1 Initialize EEPROM parameters (function code: 01, 91) 5-3
1.3.2 Print white level/black level data for document scanning compensation (function code: 05) 5-4
1.3.3 Move CIS unit to transportation position (function code: 06) 5-6
1.3.4 ADF performance test (function code: 08) 5-6
1.3.5 Print test pattern (function code: 09) 5-7
1.3.6 Set worker switches (WSW) and print worker switch setting data (function code: 10, 11) 5-8
1.3.7 Check LCD operation (function code: 12) 5-12
1.3.8 Check control panel button operation (function code: 13) 5-13
1.3.9 Display software version (function code: 25) 5-15
1.3.10 Check sensor operation (function code: 32) 5-16
1.3.11 Display LAN connection status (function code: 33) 5-18
1.3.12 Set PC print functions (function code: 43) 5-19
1.3.13 Change USB No. return value / Adjust left-end print start position on second side when duplex printing / Change ON/OFF setting for Deep Sleep function (function code: 45) 5-22
1.3.14 Set country/language (function code: 52) 5-24
1.3.15 Transfer received fax data/log information (function code: 53) 5-25
1.3.16 Fine-tune scanning position (function code: 54) 5-27
1.3.17 Acquire white level data and set CIS scan area (function code: 55) 5-27
1.3.18 Adjust touch panel (function code: 61) 5-28
1.3.19 Continuous print test (function code: 67) 5-29
1.3.20 Print frame pattern (single-side printing) (function code: 69) 5-31
1.3.21 Print frame pattern (duplex printing) (function code: 70) 5-33
1.3.22 Print solid pattern (function code: 71) 5-34
1.3.23 Setting by country (function code: 74) 5-35
1.3.24 Print maintenance information (function code: 77) 5-38
1.3.25 Check fan operation (function code: 78) 5-40
1.3.26 Display machine log information (function code: 80) 5-41
1.3.27 Display machine error code (function code: 82) 5-44
1.3.28 Send communication log information to telephone line (function code: 87) 5-44
1.3.29 Reset counters for periodic replacement parts (function code: 88) 5-44
1.3.30 Quit maintenance mode (function code: 99) 5-45
2. OTHER SERVICE FUNCTIONS 5-46
2.1 Change ON/OFF Setting for Deep Sleep Mode 5-46
2.2 Reset Periodic Replacement Parts 5-47

2.3 Reset Developer Roller Counter 5-48
2.4 Display ROM Version 5-49
2.5 Perform Demo Printing 5-49

CHAPTER 6 WIRING DIAGRAM

1. WIRING DIAGRAM 6-1

CHAPTER 7 PERIODICAL MAINTENANCE

1. SAFETY PRECAUTIONS 7-1

2. PERIODICAL REPLACEMENT PARTS 7-2

2.1 Preparation 7-2
2.2 Fuser unit 7-3
2.3 Laser unit 7-7
2.4 MP paper feeding kit 7-14
2.5 Paper feeding kit 1 7-15
2.6 Paper feeding kit 2 7-17

APPENDIX 1 SERIAL NUMBERING SYSTEM

APPENDIX 2 DELETING USER SETTING INFORMATION

APPENDIX 3 INSTALLING MAINTENANCE DRIVER

SAFETY INFORMATION

WARNING

WARNING indicates a potentially hazardous situation which, if not avoided, could result in death or serious injuries.

CAUTION

CAUTION indicates a potentially hazardous situation which, if not avoided, may result in minor or moderate injuries.

Important

Important indicates a potentially hazardous situation which, if not avoided, may result in damage to property or loss of product functionality.

Prohibition icons indicate actions that must not be performed.

Electrical Hazard icons alert you to possible electrical shock.

Fire Hazard icons alert you to the possibility of fire.

Hot Surface icons warn you not to touch product parts that are hot.

Note Notes tell you how you should respond to a situation that may arise or give tips about how the operation works with other features.

Confidential

■ To use the Machine Safely

Please keep these instructions for later reference and read them before attempting any maintenance. If you do not follow these safety instructions, there is a possibility of a fire, electrical shock, burn or suffocation.

WARNING

ELECTRICAL HAZARDS

Failure to follow the warnings in this section may create the risk of an electrical shock. In addition, you could create an electrical short, which may create the risk of a fire.

There are high voltage electrodes inside the product. Before you access the inside of the product, including for routine maintenance such as cleaning, make sure you have unplugged the telephone line cord first (MFC only) and then the power cord from the AC power outlet, as well as Ethernet (RJ-45) cables (Network models only) from the product. Never push objects of any kind into this product through cabinet slots, since they may touch dangerous voltage points or short out parts.

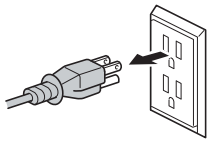

DO NOT handle the plug with wet hands.

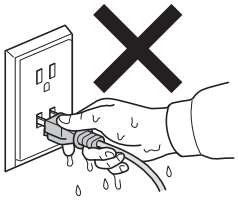

DO NOT use this product during an electrical storm.

Always make sure the plug is fully inserted. DO NOT use the product or handle the cord if the cord has become worn or frayed.

DO NOT allow this product to come into contact with water.

This product should be connected to an AC power source within the range indicated on the rating label. DO NOT connect it to a DC power source or inverter.

Power Cord Safety:

- This product is equipped with a 3-wire grounded plug. This plug will only fit into a grounded power outlet. This is a safety feature. DO NOT defeat the purpose of the grounded plug.
- Use only the power cord supplied with this product.
- DO NOT allow anything to rest on the power cord. DO NOT place this product where people can walk on the cord. DO NOT place this product in a position where the cord is stretched or strain is otherwise put on the cord. Doing so may cause the cord to become worn or frayed.
- We do not advise using an extension cord.
- If an extension cord is used with this product, make sure that the total ampere ratings on the products plugged into the extension cord do not exceed the extension cord ampere rating.
  Also, make sure that the total of all products plugged into the AC power outlet does not exceed 15 amperes. DO NOT plug one extension cord into another.

- DO NOT put a toner cartridge or a toner cartridge and drum unit assembly into a fire. It could explode, resulting in injuries.
- DO NOT use flammable substances, any type of spray, or an organic solvent/liquid containing alcohol or ammonia to clean the inside or outside of the product. Doing so could cause a fire or electrical shock. Instead, use only a dry, lint-free cloth.

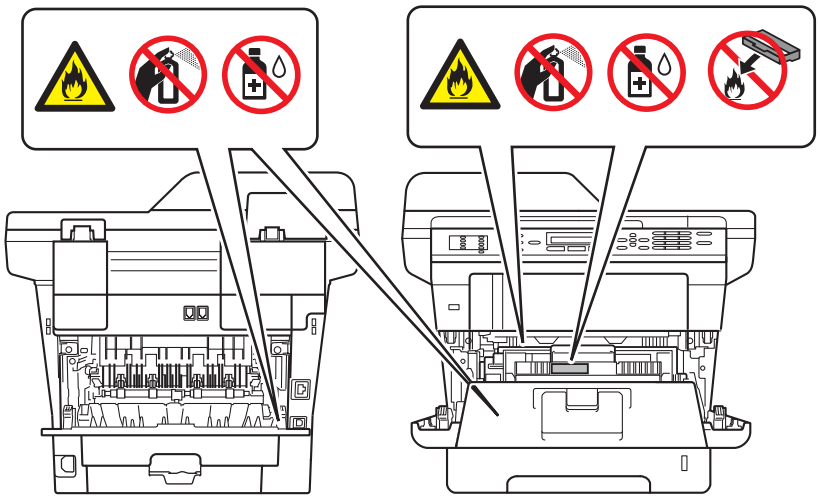

DO NOT attempt to operate this product with a paper jam or with stray pieces of paper inside the product. Prolonged contact of the paper with the fuser unit could cause a fire.

DO NOT use a vacuum cleaner to clean up scattered toner. Doing this might cause the toner dust to ignite inside the vacuum cleaner, potentially starting a fire. Please carefully clean the toner dust with a dry, lint-free soft cloth and dispose of it according to local regulations.

Confidential

HOT SURFACE

After you have just used the product, some internal parts of the product will be extremely hot. Wait at least 10 minutes for the product to cool down before you touch the internal parts of the product.

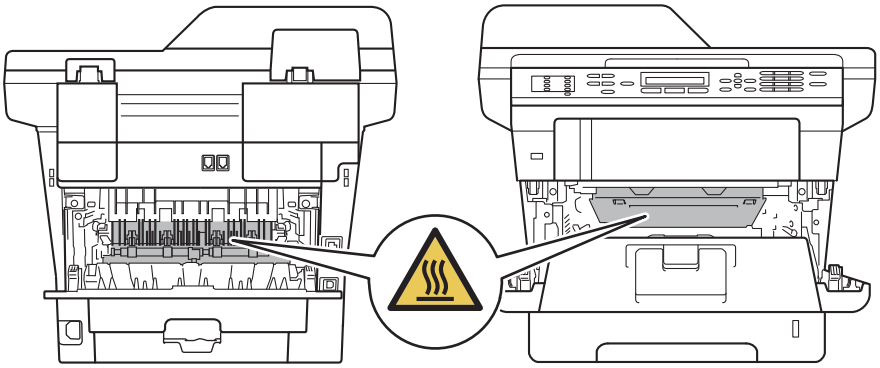

When moving the product, grasp the side handholds firmly from the front of the product. The side handholds are located under the scanner. DO NOT carry the product by holding it at the bottom.

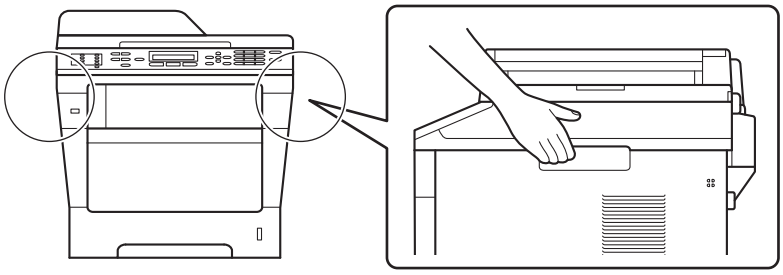

To prevent injuries, be careful not to put your fingers in the areas shown in the illustrations.

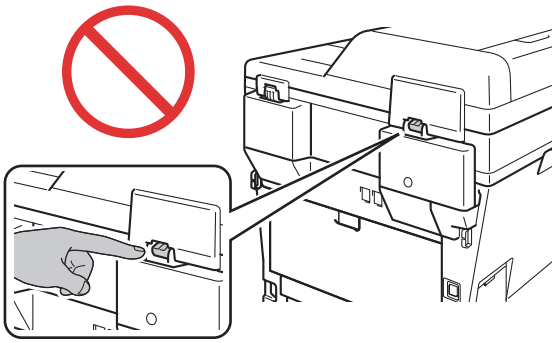

(DCP-8150DN/8155DN/MFC-8710DW/8810DW/8910DW/8950DW(T) ONLY)
This product is heavy and weighs more than 39.7 lb. (18.0 kg) including paper. To prevent possible injuries, at least two people should lift the product by holding it from the front and back.

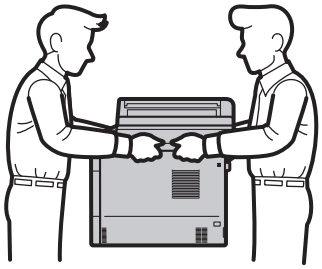

When using your telephone equipment, basic safety precautions should always be followed to reduce the risk of fire, electrical shock and injury to people, including the following:

1. DO NOT use this product near water, for example, near a bath tub, wash bowl, kitchen sink or washing machine, in a wet basement or near a swimming pool.
2. Avoid using this product during an electrical storm. There may be a remote risk of electric shock from lightning.
3. DO NOT use this product to report a gas leak in the vicinity of the leak.
4. Use only the power cord provided with the product.

SAVE THESE INSTRUCTIONS

To reduce the risk of shock or fire, use only a No. 26 AWG or larger telecommunication line cord.

Confidential

■ Caution for Laser Product (WARNHINWEIS für Laserdrucker)

CAUTION: In case of any trouble with the laser unit, replace the laser unit itself. To prevent direct exposure to the laser beam, do not try to open the enclosure of the laser unit.

ACHTUNG: Im Falle von Störungen der Lasereinheit muß diese ersetzt werden. Das Gehäuse der Lasereinheit darf nicht geöffnet werden, da sonst Laserstrahlen austreten können.

<Location of the laser beam window>

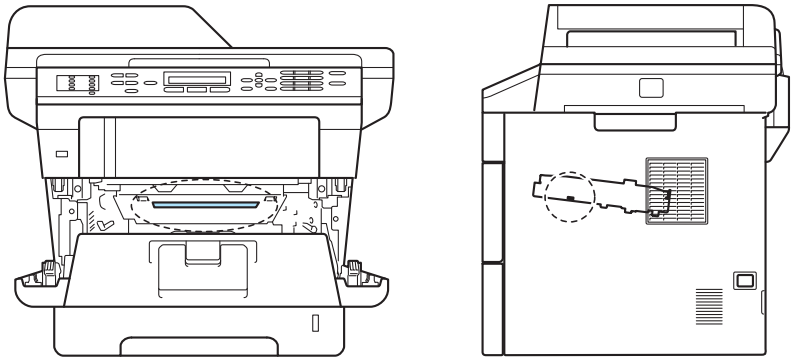

■ Additional Information

When servicing the optical system of the machine, be careful not to place a screwdriver or other reflective object in the path of the laser beam. Be sure to take off any personal accessories such as watches and rings before working on the machine. A reflected beam, though invisible, can permanently damage the eyes.

Since the beam is invisible, the following caution indication is attached on the laser unit.

Label

In print

Unlawful use of Copying Equipment

It is an offence to make reproductions of certain items or documents with the intent to commit fraud. The following is a non-exhaustive list of documents which it may be unlawful to produce copies of. We suggest you check with your legal adviser and/or the relevant legal authorities if in doubt about a particular item or document:

* Currency
* Bonds or other certificates of indebtedness
* Certificates of Deposit
* Armed forces service or draft papers
* Passports
* Postage stamps (cancelled or uncancelled)
* Immigration papers
* Welfare documents
* Cheques or drafts drawn by governmental agencies
* Identifying badges or insignias

In addition, driving licenses and/or Certificates of Title to motor vehicles may not be copied under certain national laws.

Copyrighted works cannot be copied lawfully, subject to the “fair dealing” exception relating to sections of a copyrighted work. Multiple copies would indicate improper use. Works of art should be considered the equivalent of copyrighted works.

Standard Telephone and FCC Notices (MFC only)

These notices are in effect on models sold and used in the United States only.

When programming emergency numbers or making test calls to emergency numbers:

* Remain on the line and briefly explain to the dispatcher the reason for the call before hanging up.
* Perform these activities in the off-peak hours, such as early morning or late evening.

This equipment complies with Part 68 of the FCC rules and the requirements adopted by the ACTA. On the backside of this equipment is a label that contains, among other information, a product identifier in the format US: AAAEQ##TXXXX. If requested, this number must be provided to the telephone company.

You may safely connect this equipment to the telephone line by means of a standard modular jack, USOC RJ11C.

A plug and jack used to connect this equipment to the premises wiring and telephone network must comply with the applicable FCC Part 68 rules and requirements adopted by the ACTA. A compliant telephone cord and modular plug is provided with this product. It is designed to be connected to a compatible modular jack that is also compliant. (See installation instructions for details.)

The REN is used to determine the number of devices that may be connected to a telephone line. Excessive RENs on a telephone line may result in the devices not ringing in response to an incoming call. In most but not all areas, the sum of RENs should not exceed five (5.0). To be certain of the number of devices that may be connected to a line, as determined by the total RENs, contact the local telephone company. For products approved after July 23, 2001, the REN for this product is part of the product identifier that has the format US:AAAEQ##TXXXX. The digits represented by ## are the REN without a decimal point (e.g., 06 is a REN of 0.6). For earlier products, the REN is separately shown on the label.

Confidential

If this equipment causes harm to the telephone network, the telephone company will notify you in advance that temporary discontinuance of service may be required. But if advance notice is not practical, the telephone company will notify the customer as soon as possible. Also, you will be advised of your right to file a complaint with the FCC if you believe it is necessary.

The telephone company may make changes in its facilities, equipment, operations or procedures that could affect the operation of the equipment. If this happens the telephone company will provide advance notice in order for you to make necessary modifications to maintain uninterrupted service.

If trouble is experienced with this equipment, for repair or warranty information, please contact Brother Customer Service. (uu Basic User's Guide: Brother numbers) If the equipment is causing harm to the telephone network, the telephone company may request that you disconnect the equipment until the problem is resolved.

Connection to party line service is subject to state tariffs. Contact the state public utility commission, public service commission or corporation commission for information.

If your home has specially wired alarm equipment connected to the telephone line, ensure the installation of this equipment does not disable your alarm equipment. If you have questions about what will disable alarm equipment, call your telephone company or a qualified installer.

WARNING

For protection against the risk of electrical shock, always disconnect all cables from the wall outlet before servicing, modifying or installing the equipment.

Important

- This equipment may not be used on coin service lines provided by the telephone company or connected to party lines.
- Brother cannot accept any financial or other responsibilities that may be the result of your use of this information, including direct, special or consequential damages. There are no warranties extended or granted by this document.
- This product has been certified to comply with FCC standards, which are applied to the USA only. A grounded plug should be plugged into a grounded AC power outlet after checking the rating of the local power supply for the product to operate properly and safely.

Confidential

■ DCP-8110DN EQUIPMENT ATTACHMENT LIMITATIONS (Canada only) (MFC only)

NOTICE: This product meets the applicable Industry Canada technical specifications.

Le present materiel est conforme aux specifications techniques applicables d'Industrie Canada.

NOTICE: The Ringer Equivalence Number is an indication of the maximum number of devices allowed to be connected to a telephone interface. The termination on an interface may consist of any combination of devices subject only to the requirement that the sum of the RENs of all the devices does not exceed five.

L’indice d’équivalence de la sonnerie (IES) sert à indiquer le nombre maximal de terminaux qui peuvent être raccordés à une interface téléphonique. La terminaison d’une interface peut consister en une combinaison quelconque de dispositifs, à la seule condition que la somme d’indices d’équivalence de la sonnerie de tous les dispositifs n’excède pas 5.

CHAPTER 1
SPECIFICATIONS

CHAPTER 1 SPECIFICATIONS

This chapter lists the specifications of each model.

CONTENTS

1. SPECIFICATIONS LIST 1-1

1.1 General 1-1
1.2 Network Connectivity 1-6
1.3 Service Information 1-7
1.4 Supplies 1-8
1.5 Paper 1-10
1.5.1 Paper handling 1-10
1.5.2 Media specifications 1-11
1.5.3 Type and size of paper 1-11
1.6 Printable & Scannable Area 1-12
1.7 Telephone 1-12
1.8 FAX (Only for the models with FAX function) 1-13
1.9 Copy 1-13
1.10 Scanner 1-14
1.11 USB Direct Interface 1-14

1. SPECIFICATIONS LIST

1.1 General

Model		DCP-8110D DCP-8110DN DCP-8112DN	DCP-8150DN DCP-8152DN	DCP-8155DN DCP-8157DN	DCP-8250DN	MFC-8510DN MFC-8512DN MFC-8515DN
Print method		Electrophotographic Laser Printer				
Resolution		1200 x 1200 dpi, HQ1200 (2400 x 600 dpi), 600 x 600 dpi				
Print speed	One-sided	Up to 36/38 ppm (A4/ Letter size)	Up to 40/40 ppm (A4/Letter size) DCP-8155DN For Asia and Oceania / DCP-8250DN:Up to 40/42 ppm (A4/ Letter size)			Up to 36/38 ppm (A4/ Letter size)
	Two-sided	18/18 sides per minute (9/9 sheets per minute) (A4/Letter size)				
Warm-up time	From Sleep mode	Less than 3 seconds at 73.4F / 50% (23°C / 50%)				
	From Power OFF → ON	Less than 27 seconds at 73.4F / 50% (23°C / 50%)				
First print time	From Ready mode	Less than 8.5 seconds				
	From Sleep mode	Less than 10 seconds				
CPU		StarSapphire 400 MHz				
Memory	Standard	64 MB		128 MB		64 MB
	Option	Up to 256 MB (DDR2 16 bit, 144 pin)				
Backup clock		Up to 60 hours				
Interface		Hi-Speed USB 2.0 10Base-T/100Base-TX (DCP-8110D: N/A)			Hi-Speed USB 2.0 10Base-T/100BaseTX/ 1000Base-T (DCP-8250DN only)	
Power consumption	Peak	Average: Approximately 1200 W				
	Copying	Average: Approximately 669 W (for U.S.A.) Average: Approximately 651 W (for Europe, Asia)	Average: Approximately 702 W (for U.S.A.) Average: Approximately 694 W (for Europe, Asia, Oceania)			Average: Approximately 669 W (for U.S.A.) Average: Approximately 651 W (for Europe, Asia, Oceania, China)
	Quiet Mode/ Copying	Average: Approximately 336 W	Average: Approximately 350 W			Average: Approximately 336 W
	Ready	Average: Approximately 8.1 W				
	Sleep, Wireless LAN: ON	N/A				
	Deep Sleep	Average: Approximately 1.2 W	Average: Approximately 1.4 W		Average: Approximately 1.6 W	Average: Approximately 1.2 W
	Auto Power Down Mode	Approximately 0.26 W (only for Europe and GULF)			Approximately 0.45W (only for Europe and GULF)	N/A

Specifications are subject to change without notice.

Model			DCP-8110D DCP-8110DN DCP-8112DN	DCP-8150DN DCP-8152DN	DCP-8155DN DCP-8157DN	DCP-8250DN	MFC-8510DN MFC-8512DN MFC-8515DN
Noise level	Sound pressure	Printing	LpAm = 59 dB(A)				
		Ready	LpAm = 37 dB(A)				
	Sound power	Printing	LWAd = 6.64 B(A)	LWAd = 6.58 B(A)		LWAd = 6.63 B(A)	LWAd = 6.64 B(A)
		Ready	LWAd = 4.62 B(A)	LWAd = 4.6 B(A)		LWAd = 4.7 B(A)	LWAd = 4.62 B(A)
		Printing (Quiet Mode)	LWAd = 6.4 B(A)				
Environment	Temperature		Operating: 10 to 32.5°C Storage: 0 to 40°C				
	Humidity		Operating: 20 to 80% Storage: 10 to 90% (without condensation)				
Dimensions (W x D x H)	Carton Size		533 x 515 x 601 mm (21.0 x 20.3 x 23.7 inch)	594 x 533 x 605 mm (23.4 x 21.0 x 23.8 inch)		594 x 533 x 636 mm (23.4 x 21.0 x 25.0 inch)	533 x 515 x 601 mm (21.0 x 20.3 x 23.7 inch)
	Machine Size		405 x 415 x 423 mm (15.9 x 16.3 x 16.7 inch)	491 x 415 x 447 mm (19.3 x 16.3 x 17.6 inch)		491 x 415 x 477 mm (19.3 x 16.3 x 18.8 inch)	405 x 415 x 423 mm (15.9 x 16.3 x 16.7 inch)
Weights	Without Carton, With toner/drum		15.6 kg / 34.4 lb	16.1 kg / 35.5 lb	16.5 kg / 36.4 lb DCP-8157DN: 15.9 kg / 35.1 lb	17.5 kg / 38.6 lb	15.8 kg / 34.8 lb
LCD Size			2.76 x 1.06 inch (22 characters x 5 lines)			4.64 x 1.74 inch Wide 5" TFT ColorLCD (Wide12.6 cm/ 126.0 mm TFT ColorLCD)	2.76 x 1.06 inch (22 characters x 5 lines) For China: 2.64 x 1.06 inch (15 characters x 5 lines)

Specifications are subject to change without notice.

Model		MFC-8520DN	MFC-8710DW MFC-8712DW	MFC-8910DW MFC-8912DW	MFC-8950DW MFC-8952DW	MFC-8950DWT MFC-8952DWT	MFC-8810DW
Print method		Electrophotographic Laser Printer					
Resolution		1200 x 1200 dpi, HQ1200 (2400 x 600 dpi) quality, 600 x 600 dpi					
Print speed	One-sided	Up to 36/38 ppm (A4/ Letter size)	Up to 40/40 ppm (A4/ Letter size)	Up to 40/42 ppm (A4/ Letter size)	Up to 40/42 ppm (A4/ Letter size)		Up to 38/40 ppm (A4/ Letter size)
	Two-sided	18/18 sides per minute (9/9 sheets per minute) (A4/Letter size)					
Warm-up time	From Sleep mode	Less than 3 seconds at 73.4F / 50% (23°C / 50%)					
	From Power OFF → ON	Less than 27 seconds at 73.4F / 50% (23°C / 50%)					
First print time	From Ready mode	Less than 8.5 seconds					
	From Sleep mode	Less than 10 seconds					
CPU		StarSapphire 400 MHz					
Memory	Standard	128 MB	64 MB	128 MB			
	Option	Up to 256 MB (DDR2 16 bit, 144 pin)					
Backup clock		Up to 60 hours					
Interface		Hi-Speed USB 2.0 10Base-T/100Base-TX			Hi-Speed USB 2.0 10Base-T/1000Base-TX IEEE 802.11b/g/n (Infrastructure Mode) IEEE 802.11b (Ad-hoc Mode)		Hi-Speed USB 2.0 10Base-T/ 100Base-TX
Power consumption	Peak	Average: Approximately 1200 W					
	Copying	Average: Approximately 651 W	Average: Approximately 702 W (for U.S.A.) Average: Approximately 694 W (for Europe, Asia, Oceania)				Average: Approximately 687 W
	Quiet Mode/ Copying	Average: Approximately 336 W	Average: Approximately 350 W				Average: Approximately 325 W
	Ready	Average: Approximately 8.1 W			Average: Approximately 9.8 W		Average: Approximately 8.1 W
	Sleep, Wireless LAN: ON	N/A	Average: Approximately 6.3 W		Average: Approximately 6.8 W		Average: Approximately 6.3 W
	Deep Sleep	Average: Approximately 1.2 W	Average: Approximately 1.4 W		Average: Approximately 1.6 W		Average: Approximately 1.4 W
	Auto Power Down Mode	N/A					

Specifications are subject to change without notice.

Model			MFC-8520DN	MFC-8710DW MFC-8712DW	MFC-8910DW MFC-8912DW	MFC-8950DW MFC-8952DW	MFC-8950DWT MFC-8952DWT	MFC-8810DW
Noise level	Sound pressure	Printing	LpAm = 59 dB(A)					
		Ready	LpAm = 37 dB(A)					
	Sound power	Printing	LWAd = 6.58 B(A)			LWAd = 6.63 B(A)	LWAd = 6.78 B(A)	LWAd = 6.58 B(A)
		Ready	LWAd = 4.62 B(A)	LWAd = 4.6 B(A)		LWAd = 4.7 B(A)	LWAd = 4.58 B(A)	LWAd = 4.6 B(A)
		Printing (Quiet Mode)	LWAd = 6.4 B(A)					
Environment	Temperature		Operating: 10 to 32.5°C Storage: 0 to 40°C					
	Humidity		Operating: 20 to 80% Storage: 10 to 90% (without condensation)					
Dimensions (W x D x H)	Carton Size		533 x 515 x 601 mm (21.0 x 20.3 x 23.7 inch)	594 x 533 x 605 mm (23.4 x 21.0 x 23.8 inch)		594 x 533 x 636 mm (23.4 x 21.0 x 25 inch)	764 x 563 x 924 mm (30.1 x 22.2 x 36.4 inch)	594 x 533 x 605 mm (23.4 x 21.0 x 23.8 inch)
	Machine Size		405 x 415 x 423 mm (15.9 x 16.3 x 16.7 inch)	491 x 415 x 447 mm (19.3 x 16.3 x 17.6 inch)		491 x 415 x 477 mm (19.3 x 16.3 x 18.8 inch)	491 x 415 x 607 mm (19.3 x 16.3 x 23.9 inch)	491 x 415 x447 mm (19.3 x 16.3 x 17.6 inch)
Weights	Without Carton, With toner/ drum		16.0 kg / 35.3 lb	16.3 kg / 35.9 lb MFC-8712DW: 15.7 kg / 34.6 lb	16.7 kg / 36.8 lb MFC-8912DW: 16.1 kg / 35.5 lb	17.7 kg / 39.0 lb	20.8 kg / 45.9 lb MFC-8952DWT: 20.1 kg / 44.3 lb	16.7 kg / 36.8 lb
LCD Size			2.76 x 1.06 inch (22 characters x 5 lines) MFC-8520DN for China: 2.64 x 1.06 inch (15 characters x 5 lines)			4.64 x 1.74 inch Wide 5" TFT ColorLCD (Wide 12.6 cm/126.0 mm TFT ColorLCD)		2.76 x 1.06 inch (22 characters x 5 lines)

Specifications are subject to change without notice.

<Computer requirements>

Computer Platform & Operating System Version		Processor Minimum Speed	Minimum RAM	Recom-mended RAM	Hard Disk Space to install		Supported PC Interface *2
					For Drivers	For Applications	
Windows® Operating System	Windows® XP Home *1 *3 Windows® XP Professional *1 *3	Intel® Pentium® II or equivalent	128 MB	256 MB	150 MB	500 MB	USB, 10Base-T/ 100Base-TX (Ethernet), 1000Base-T (Gigabit Ethernet) *3, Wireless *4 802.11b/g/n
	Windows® XP Professional x64 Edition *1 *3	64-bit (Intel® 64 or AMD 64) supported CPU	256 MB	512 MB			
	Windows Vista® *1 *3	Intel® Pentium® 4 or equivalent 64-bit (Intel® 64 or AMD 64) supported CPU	512 MB	1 GB	500 MB	1.2 GB	
	Windows® 7 *1 *3	Intel® Pentium® 4 or equivalent 64-bit (Intel® 64 or AMD 64) supported CPU	1 GB (32-bit) 2 GB (64-bit)	1 GB (32-bit) 2 GB (64-bit)	650 MB		
	Windows Server® 2003	Intel® Pentium® III or equivalent	256 MB	512 MB	50 MB	N/A	10Base-T/ 100Base-TX (Ethernet), 1000Base-T (Gigabit Ethernet) *3, Wireless *4 802.11b/g/n
	Windows Server® 2003 x64 Edition	64-bit (Intel® 64 or AMD 64) supported CPU					
	Windows Server® 2008	Intel® Pentium® 4 or equivalent 64-bit (Intel® 64 or AMD 64) supported CPU	512 MB	2 GB			
	Windows Server® 2008 R2	64-bit (Intel® 64 or AMD 64) supported CPU					
Macintosh Operating System	OS X 10.5.8	PowerPC® G4/G5 Intel® Processor	512 MB	1 GB	80 MB	400 MB	USB, 10Base-T/ 100Base-TX (Ethernet), 1000Base-T (Gigabit Ethernet) *3, Wireless *4 802.11b/g/n
	OS X 10.6.x	Intel® Processor	1 GB	2 GB			
	OS X 10.7.x	Intel® Processor	2 GB	2 GB			

*1 For WIA, 1200 x 1200 resolution. Brother Scanner Utility enables to enhance up to 19200 x 19200 dpi.

*2 Third-party USB ports are not supported.

*3 Nuance™ Paper port™ 12SE supports Microsoft® SP3 or higher for Windows® XP and SP2 or higher for Windows Vista® and Windows® 7.

*4 For wireless LAN models.

Specifications are subject to change without notice.

1.2 Network Connectivity

Model		DCP-8110D DCP-8110DN DCP-8112DN	DCP-8150DN DCP-8152DN	DCP-8155DN DCP-8157DN	DCP-8250DN	MFC-8510DN MFC-8512DN MFC-8515DN
Wired network	Network node type	NC-8300h * DCP-8110D: N/A				
	Network type	10Base-T/100Base-TX (Ethernet) * DCP-8110D: N/A			10Base-T/ 100Base-TX/ 1000Base-T (Ethernet)	10Base-T/ 100Base-TX (Ethernet)
	Network security	APOP, POP before SMTP, SMTP-AUTH, SSL/TLS (IPPS, HTTPS, SMTP, POP), SNMP v3 802.1x (EAP-MD5, EAP-FAST, PEAP, EAP-TLS, EAP-TTLS), Kerberos				
Wireless network	Network node type	N/A				
	Network type	N/A				
	Communication mode	N/A				
	Network security	N/A				

Specifications are subject to change without notice.

Model		MFC-8520DN	MFC-8710DW MFC-8712DW	MFC-8910DW MFC-8912DW	MFC-8950DW MFC-8952DW	MFC-8950DWT MFC-8952DWT	MFC-8810DW
Wired network	Network node type	NC-8300h					
	Network type	10Base-T/100Base-TX (Ethernet)			10Base-T/100Base-TX/ 1000Base-T (Ethernet)		10Base-T/ 100Base-TX (Ethernet)
	Network security	APOP, POP before SMTP, SMTP-AUTH, SSL/TLS (IPPS, HTTPS, SMTP, POP), SNMP v3 802.1x (EAP-MD5, EAP-FAST, PEAP, EAP-TLS, EAP-TTLS), Kerberos					
Wireless network	Network node type	NC-7900w					
	Network type	N/A	IEEE 802.11b/g/n				
	Communication mode	Infrastructure, Adhoc					
	Network security	APOP, POP before SMTP, SMTP-AUTH, SSL/TLS (IPPS, HTTPS, SMTP, POP), SNMP v3 802.1x (LEAP, EAP-FAST, PEAP, EAP-TLS, EAP-TTLS), Kerberos					

Specifications are subject to change without notice.

1.3 Service Information

Part		Approximate Life (pages)
Machine life		300,000 pages (A4/Letter size) or 5 years
Part life (ADF)		Up to 50,000 pages
Part life (Document Scanner Unit)		Up to 50,000 pages
MTBF		4,000 hours
MTTR		0.5 hours
Maximum monthly volume		Up to 50,000 pages
Periodical maintenance parts	Fuser Unit	Up to 100,000 pages
	Laser Unit	Up to 100,000 pages
	Paper Feeding Kit 1	Up to 100,000 pages
	Paper Feeding Kit 2	Up to 100,000 pages
	MP Paper Feeding Kit	Up to 50,000 pages

Specifications are subject to change without notice.

1.4 Supplies

<table>
<tr><th colspan="2">Model</th><th>DCP-8110D
DCP-8110DN
DCP-8112DN</th><th>DCP-8150DN
DCP-8152DN</th><th>DCP-8155DN
DCP-8157DN</th><th>DCP-8250DN</th><th>MFC-8510DN
MFC-8512DN
MFC-8515DN</th></tr>
<tr><td rowspan="4">Toner cartridge</td><td>Starter Toner *1</td><td colspan="2">Approximately 3,000 pages
* DCP-8110DN/8112DN for U.S.A. and Europe: Approximately 2,000 pages</td><td>Approximately 3,000 pages
* DCP-8157DN: N/A</td><td>Approximately 8,000 pages</td><td>Approximately 2,000 pages
* MFC-8510DN for Asia& China/MFC-8515DN for China: Approximately 3,000 pages</td></tr>
<tr><td>Standard Toner</td><td colspan="5">Approximately 3,000 pages</td></tr>
<tr><td>High Yield Toner</td><td colspan="5">Approximately 8,000 pages</td></tr>
<tr><td>Super High Yield Toner</td><td colspan="2">N/A</td><td colspan="2">Approximately 12,000 pages
* DCP-8155DN for U.S.A.&Oceania: N/A</td><td>N/A
* For China: Approximately 12,000 pages</td></tr>
<tr><td colspan="6">When printing A4/Letter size one sided pages in accordance with ISO/IEC 19752
Shelf life: 2 years without opening (6 months after opening)</td></tr>
<tr><td colspan="2">Drum unit</td><td colspan="4">Life expectancy: Approximately 30,000 pages/drum unit
The life expectancy varies according to the use condition.
Shelf life: 2 years</td></tr>
<tr><td colspan="6">The shelf life of toner cartridge and drum unit is guaranteed under the normal condition as below;
(Temperature) Normal condition: 0 to 40°C
* Storage condition at the temperature of 40 to 50°C: Up to 5 days
* Storage condition at the temperature of -20 to 0°C: Up to 5 days
(Humidity) Normal condition: 35 to 85% (without condensation)
* Storage condition at the humidity of 85 to 95%: Up to 5 days (without condensation)
* Storage condition at the humidity of 10 to 35%: Up to 5 days (without condensation)</td></tr>
</table>

*1 Toner supplied with the machine.

Specifications are subject to change without notice.

<table>
<tr><th colspan="2">Model</th><th>MFC-8520DN</th><th>MFC-8710DW
MFC-8712DW</th><th>MFC-8910DW
MFC-8912DW</th><th>MFC-8950DW
MFC-8952DW</th><th>MFC-8950DWT
MFC-8952DWT</th><th>MFC-8810DW</th></tr>
<tr><td rowspan="4">Toner cartridge</td><td>Starter Toner *1</td><td colspan="2">Approximately 3,000 pages
* MFC-8520DN for Europe: Approximately 2,000 pages
MFC-8520DN for CONSIP ITALY/ MFC-8712DW: N/A</td><td>Approximately 3,000 pages
* MFC-8912DW: N/A</td><td colspan="2">Approximately 3,000 pages
* For Europe: Approximately 8,000 pages
MFC-8952DW/8952DWT: N/A</td><td>Approximately 3,000 pages</td></tr>
<tr><td>Standard Toner</td><td colspan="6">Approximately 3,000 pages
* MFC-8520DN for CONSIP ITALY: N/A</td></tr>
<tr><td>High Yield Toner</td><td colspan="6">Approximately 8,000 pages
* MFC-8520DN for CONSIP ITALY: N/A</td></tr>
<tr><td>Super High Yield Toner</td><td colspan="3">N/A
* For China/MFC-8712DW/8912DW for U.S.A./MFC-8910DW for Asia/ MFC-8520DN for CONSIP ITALY: Approximately 12,000 pages</td><td colspan="2">Approximately 12,000 pages</td><td>N/A</td></tr>
<tr><td colspan="8">When printing A4/Letter size one sided pages in accordance with ISO/IEC 19752
Shelf life: 2 years without opening (6 months after opening)</td></tr>
<tr><td colspan="2">Drum unit</td><td colspan="6">Life expectancy: Approximately 30,000 pages/drum unit
The life expectancy varies according to the use condition.
Shelf life: 2 years</td></tr>
<tr><td colspan="8">The shelf life of toner cartridge and drum unit is guaranteed under the normal condition as below;
(Temperature) Normal condition: 0 to 40°C
* Storage condition at the temperature of 40 to 50°C: Up to 5 days
* Storage condition at the temperature of -20 to 0°C: Up to 5 days
(Humidity) Normal condition: 35 to 85% (without condensation)
* Storage condition at the humidity of 85 to 95%: Up to 5 days (without condensation)
* Storage condition at the humidity of 10 to 35%: Up to 5 days (without condensation)</td></tr>
</table>

*1 Toner supplied with the machine.

Specifications are subject to change without notice.

1.5 Paper

1.5.1 Paper handling

Model		DCP-8110D DCP-8110DN DCP-8112DN	DCP-8150DN DCP-8152DN	DCP-8155DN DCP-8157DN	DCP-8250DN	MFC-8510DN MFC-8512DN MFC-8515DN
Paper Input	Paper tray 1	250 sheets			500 sheets	250 sheets
	Paper tray 2	500 sheets (Option) * DCP-8110DN/8112DN/MFC-8510DN/8512DN for U.S.A. : N/A				
	MP tray	50 sheets				
	ADF	35 sheets	50 sheets			35 sheets
Paper Output	Face-down	150 sheets (80 g/m^2)				
	Face-up	1 sheet (straight paper path)				
Duplex		Yes				

Specifications are subject to change without notice.

Model		MFC-8520DN	MFC-8710DW MFC-8712DW	MFC-8910DW MFC-8912DW	MFC-8950DW MFC-8952DW	MFC-8950DWT MFC-8952DWT	MFC-8810DW
Paper Input	Paper tray 1	250 sheets			500 sheets		250 sheets
	Paper tray 2	500 sheets (Option)				500 sheets (Standard equipment)	500 sheets (Option)
	MP tray	50 sheets					
	ADF	35 sheets	50 sheets				
Paper Output	Face-down	150 sheets (80 g/m^2)					
	Face-up	1 sheet (straight paper path)					
Duplex		Yes					

Specifications are subject to change without notice.

1.5.2 Media specifications

Model		All models
Paper Input	Paper tray 1	Plain Paper, Thin Paper, Recycled Paper
	Paper tray 2	Plain Paper, Thin Paper, Recycled Paper
	MP tray	Plain Paper, Thin Paper, Thick Paper, Thicker Paper, Recycled Paper, Bond paper, Labels, Envelopes, Env. Thin, Env. Thick
	Duplex	Plain Paper, Thin Paper, Recycled Paper
	ADF	Plain Paper, Recycled Paper
Media weight	Paper tray 1	60 to 105 g/m^2 (16 to 28 lb)
	Paper tray 2	60 to 105 g/m^2 (16 to 28 lb)
	MP tray	60 to 163 g/m^2 (16 to 43 lb)
	Duplex	60 to 105 g/m^2 (16 to 28 lb)
	ADF	64 to 90 g/m^2 (16 to 28 lb)
Media size	Paper tray 1	A4, Letter, B5 (ISO/JIS), A5, A5 (Long Edge), B6 (ISO), A6, Executive, Legal *1, Folio
	Paper tray 2	A4, Letter, B5 (ISO/JIS), A5, B6 (ISO), Executive, Legal *1, Folio
	MP tray	Width: 76.2 to 215.9 mm (3 to 8.5 inch), Length: 127 to 355.6 mm (5 to 14 inch)
	Duplex	Letter, Legal, Folio (for U.S.A.) A4 (for Europe, Asia, Oceania, China)

*1 Legal size paper and Folio size paper are not available in some regions outside the U.S.A. and Canada.

Specifications are subject to change without notice.

1.5.3 Type and size of paper

The machine loads paper from the installed paper tray or the manual feed slot.

The names of the paper trays in the printer driver as follows:

The name for the paper trays	The name for the paper trays in the printer driver
Paper tray 1 (T1)	Tray 1
Paper tray 2 (T2)	Tray 2
MP tray	MP Tray
Duplex	DX

Specifications are subject to change without notice.

1.6 Printable & Scannable Area

The figure below shows maximum unprintable and unscannable areas.

The unprintable and unscannable areas may vary depending on the paper size or settings in the application you are using.

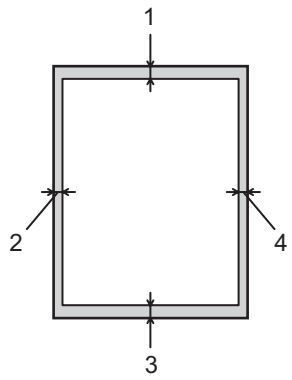

Usage	Document Size	Top (1) Bottom (3)	Left (2) Right (4)
FAX	Letter	3 mm (0.12 inch)	4 mm (0.16 inch)
	A4	3 mm (0.12 inch)	3 mm (0.12 inch)
	Legal	3 mm (0.12 inch)	4 mm (0.16 inch)
Copy	Letter	4 mm (0.16 inch)	3 mm (0.12 inch)
	A4	4 mm (0.16 inch)	3 mm (0.12 inch)
	Legal	4 mm (0.16 inch)	4 mm (0.16 inch)
Scan	Letter	3 mm (0.12 inch)	3 mm (0.12 inch)
	A4	3 mm (0.12 inch)	3 mm (0.12 inch)
	Legal	3 mm (0.12 inch)	3 mm (0.12 inch)
Print	Letter	4.23 mm (0.16 inch)	6.35 mm (0.25 inch)
	A4	4.23 mm (0.16 inch)	6.01 mm (0.24 inch)
	Legal	4.23 mm (0.16 inch)	6.35 mm (0.25 inch)

Specifications are subject to change without notice.

1.7 Telephone

Model	All models
Handset	N/A

Specifications are subject to change without notice.

1.8 FAX (Only for the models with FAX function)

Model		MFC-8520DN	MFC-8710DW MFC-8712DW	MFC-8910DW MFC-8912DW	MFC-8950DW MFC-8952DW	MFC-8950DWT MFC-8952DWT	MFC-8810DW
Modem Speed		33,600 bps (FAX)					
Transmission speed		Approx. 2.5 seconds (ITU-T Test Chart #1, Std resolution, JBIG)					
ITU-T group		Super G3					
Color FAX	Sending	N/A					
	Receiving	N/A					
Internet FAX (ITU T.37 simple mode)		Yes (Download only)		Yes			

Specifications are subject to change without notice.

1.9 Copy

Model		DCP-8110D DCP-8110DN DCP-8112DN	DCP-8150DN DCP-8152DN	DCP-8155DN DCP-8157DN	DCP-8250DN	MFC-8510DN MFC-8512DN MFC-8515DN
Copy Speed (A4/Letter)		Up to 36/38 cpm	Up to 40/40 cpm DCP-8155DN for Asia/ Oceania: Up to 40/42 cpm		Up to 40/42 cpm	Up to 36/38 cpm
First copy out time	From Ready mode and Paper tray	Less than 10.5 seconds				
	From Sleep mode and Paper tray	Less than 13.5 seconds				
Resolution (dpi)		1,200 x 600 dpi				
Auto duplex scanning copy		N/A		Yes		N/A

Specifications are subject to change without notice.

Model		MFC-8520DN	MFC-8710DW MFC-8712DW	MFC-8910DW MFC-8912DW	MFC-8950DW MFC-8952DW	MFC-8950DWT MFC-8952DWT	MFC-8810DW
Copy Speed (A4/ Letter)		Up to 36/38 cpm	Up to 40/40 cpm	Up to 40/42 cpm			Up to 38/40 cpm
First copy out time	From Ready mode and Paper tray	Less than 10.5 seconds					
	From Sleep mode and Paper tray	Less than 13.5 seconds					
Resolution (dpi)		1,200 x 600 dpi					
Auto duplex scanning copy		Yes	N/A	Yes			

Specifications are subject to change without notice.

1.10 Scanner

Model		DCP-8110D DCP-8110DN DCP-8112DN	DCP-8150DN DCP-8152DN	DCP-8155DN DCP-8157DN	DCP-8250DN	MFC-8510DN MFC-8512DN MFC-8515DN
Resolution (Optical)	FB	Maximum scanning 1,200 (main scanning) x 1,200 dpi (sub scanning)				
	ADF	Maximum scanning 1,200 (main scanning) x 600 dpi (sub scanning)				
Resolution (Interpolated)		Maximum scanning 19,200 (main scanning) x 19,200 dpi (sub scanning)				
Scanning speed	Monochrome	A4: 2.12 seconds Letter: 1.99 seconds	A4: 1.79 seconds Letter: 1.68 seconds			A4: 2.12 seconds Letter: 1.99 seconds
	Color	A4: 3.10 seconds Letter: 2.92 seconds	A4: 2.68 seconds Letter: 2.52 seconds			A4: 3.10 seconds Letter: 2.92 seconds

Specifications are subject to change without notice.

Model		MFC-8520DN	MFC-8710DW MFC-8712DW	MFC-8910DW MFC-8912DW	MFC-8950DW MFC-8952DW	MFC-8950DWT MFC-8952DWT	MFC-8810DW
Resolution (Optical)	FB	Maximum scanning 1,200 (main scanning) x 1,200 dpi (sub scanning)					
	ADF	Maximum scanning 1,200 (main scanning) x 600 dpi (sub scanning)					
Resolution (Interpolated)		Maximum scanning 19,200 (main scanning) x 19,200 dpi (sub scanning)					
Scanning speed	Monochrome	A4: 2.12 seconds Letter: 1.99 seconds	A4: 1.79 seconds Letter: 1.68 seconds				
	Color	A4: 3.10 seconds Letter: 2.92 seconds	A4: 2.68 seconds Letter: 2.52 seconds				

Specifications are subject to change without notice.

1.11 USB Direct Interface

Model	All models
PictBridge	N/A
Direct print	PDF version1.7, JPEG, Exif+JPEG, PRN (created by own printer driver) TIFF (scanned by Brother model), XPS version 1.0, PostScript 3

Specifications are subject to change without notice.

CHAPTER 2
TROUBLESHOOTING

CHAPTER 2 TROUBLESHOOTING

This chapter details error messages and codes which the incorporated self-diagnostic function of the machine will display if any error or malfunction occurs. If any error message appears, refer to this chapter to find which parts should be checked or replaced.

The latter half of this chapter provides sample problems which could occur in the main sections of the machine and related troubleshooting procedures. These will help service personnel identify and repair other similar defective sections.

CONTENTS

1. INTRODUCTION 2-1

1.1 Precautions 2-1

1.2 Checks before Commencing Troubleshooting 2-2

2. OVERVIEW 2-4

2.1 Cross-section Drawing 2-4

2.1.1 Printer part 2-4

2.1.2 ADF unit/Document scanner unit 2-5

2.2 Paper Feeding 2-7

2.2.1 Printer part 2-7

2.2.2 Scanning 2-8

2.3 Operation of Each Part 2-9

2.4 Block Diagram 2-11

2.5 Main Components 2-12

2.6 Life of Toner Cartridge and Drum Unit 2-13

3. ERROR INDICATIONS 2-18

3.1 Error Codes 2-18

3.2 Error Messages 2-24

3.3 Communication Errors 2-28

4. TROUBLESHOOTING 2-31

4.1 Error Cause and Remedy 2-31

4.2 Troubleshooting for Paper Feeding Problems 2-69

4.2.1 No paper is fed from each paper tray 2-69

4.2.2 Multiple sheets of paper are fed 2-70

4.2.3 Paper becomes wrinkled 2-70

4.2.4 Paper is fed at an angle 2-70

4.2.5 Paper is curled 2-71

4.2.6 Only single surface is printed in duplex printing mode 2-71

4.3 Troubleshooting for Image Defects 2-72

4.3.1 Image defect examples 2-72

4.3.2 Troubleshooting according to image defect 2-73

4.4 Troubleshooting for Software Problems 2-86

4.4.1 Cannot print data 2-86

4.5 Troubleshooting for Network Problems 2-87
4.5.1 Cannot print via network connection 2-87
4.6 Troubleshooting for Control Panel Problems 2-88
4.6.1 Nothing is displayed on the LCD 2-88
4.6.2 Control panel is inoperable 2-88
4.7 Troubleshooting for Toner and Drum Problems 2-89
4.7.1 New toner is not detected 2-89
4.7.2 Cartridge error (toner cartridge cannot be detected) 2-89
4.7.3 Drum error 2-89
4.8 Troubleshooting for Fuser Unit Problems 2-90
4.8.1 Fuser unit failure 2-90
4.9 Troubleshooting for Laser Unit Problems 2-91
4.9.1 Laser unit failure 2-91
4.10 Troubleshooting for PCB Problems 2-92
4.10.1 Main PCB failure 2-92
4.10.2 High-voltage power supply PCB failure 2-92
4.10.3 Low-voltage power supply PCB failure 2-92
4.10.4 Out of memory 2-92
4.11 Troubleshooting for Document Feeding Problems 2-93
4.11.1 Multiple sheets of document are fed 2-93
4.11.2 Document becomes wrinkled 2-93
4.11.3 Document size is not detected correctly 2-93
4.12 Troubleshooting for Image Defects 2-94
4.12.1 Defect examples 2-94
4.12.2 Troubleshooting according to image defect 2-94
4.13 Troubleshooting for Fax Problems 2-97
4.13.1 Fax cannot be sent 2-97
4.13.2 Fax cannot be received 2-97
4.13.3 Bell does not sound 2-97
4.13.4 Communication error occurs 2-97
4.14 Troubleshooting for Other Problems 2-98
4.14.1 Machine is not turned ON 2-98
4.14.2 Main fan does not rotate 2-98
4.14.3 Main motor failure 2-98
4.14.4 Unusual noise is generated from the machine 2-98
4.14.5 Malfunction of the memory 2-98

1. INTRODUCTION

Troubleshooting is a collection of solution procedures that service personnel should follow if an error or malfunction occurs in the machine. It is difficult to determine troubleshooting procedures for all possible problems that may occur in the future. Therefore, this chapter describes typical problem cases and recovery procedures for these. These will help service personnel identify and repair other similar defective sections.

1.1 Precautions

Be sure to observe the following precautions to prevent any secondary problems occurring during troubleshooting:

(1) Be sure to unplug the AC cord before removing any covers or PCBs, adjusting the machine, or conducting continuity tests using a tester.

(2) Do not hold the cable when connecting or disconnecting the cable. Be sure to hold the connector.

(3) Static electricity generated and stored on your body may damage electronic parts. Before handling the PCBs, touch a metal section of the machine to discharge static electricity.
When transporting PCBs, be sure to wrap them in conductive sheets.
When replacing the PCBs, wear a grounding wrist band and perform replacement on a conductive mat. Also take care not to touch the conductor sections on the flat cables.

(4) Be sure to always observe all warnings.

WARNING

Hazard labels as shown below are attached to the machine. Fully understand the descriptions on the hazard labels and observe them during troubleshooting. Take extreme care not to remove or damage the hazard labels.

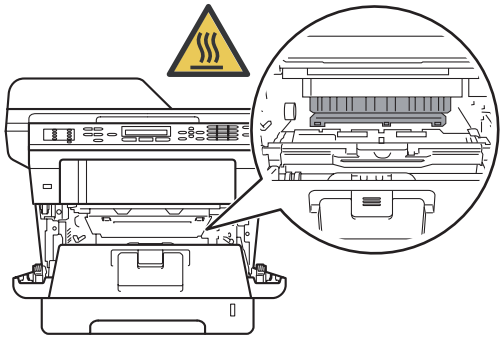

WARNING

DO NOT use any flammable spray or flammable solvent such as alcohol, benzine, or thinner in or around the machine. Otherwise a fire or electric shock may result.

(5) After repair is completed, check that the repaired sections, including those removed once and then remounted, operate normally.

1.2 Checks before Commencing Troubleshooting

Check the following items before commencing repairs on the machine.

■ Operating environment

(1) The machine is placed on a flat, stable surface.

(2) The machine is used in a clean environment where the temperature is between 10°C (50°F) and 32.5°C (90.5°F) and the relative humidity is maintained between 20% and 80%.

(3) The machine is not exposed to direct sunlight, excessive heat, moisture, or dust.

(4) Hold the machine level while moving it.

■ Power supply

(1) Power described on the rating label attached on the machine is supplied. Power fluctuation should be within ±10% of the rated voltage.

(2) The AC input power supply is within the regulated value.

(3) The cables and harnesses are connected correctly.

(4) The fuses are not blown.

■ Paper

(1) The recommended type of paper is being used. (Refer to "1.5.2 Media specifications" in Chapter 1.)

(2) The paper is not damp.

(3) Short-grained paper or acid paper is not used.

■ Consumable parts

(1) The drum unit (including the toner cartridge) is set correctly.

■ Others

(1) Condensation

When the machine is moved to a warm room from a cold location, condensation may occur inside the machine, causing various problems as listed below.

- Condensation on the surface of optical devices such as the laser scanner window, lens, reflecting mirror and protection glass may cause light print image.
- If the exposure drum is cold, the electrical resistance of the photosensitive layer is increased, making it impossible to obtain the correct print density.
- Condensation on the charge unit may cause corona charge leakage.
- Condensation on the plate or separation pad may cause paper feed problems.

If condensation has formed in the machine, leave the machine for at least two hours until it reaches room temperature.
If the drum unit is unpacked soon after it is moved to a warm room from a cold location, condensation may occur inside the unit which may cause printing failure. Leave the drum unit for one or two hours until it reaches room temperature, and then unpack it.

(2) Low temperature

The motor may not operate normally under a low temperature environment because too much load is applied to each drive. In this case, increase the room temperature.

■ Cleaning

Use a soft lint-free cloth.

WARNING

DO NOT use any flammable spray or flammable solvent such as alcohol, benzine, or thinner to clean the machine. **DO NOT** use these articles near the machine.

2. OVERVIEW

2.1 Cross-section Drawing

2.1.1 Printer part

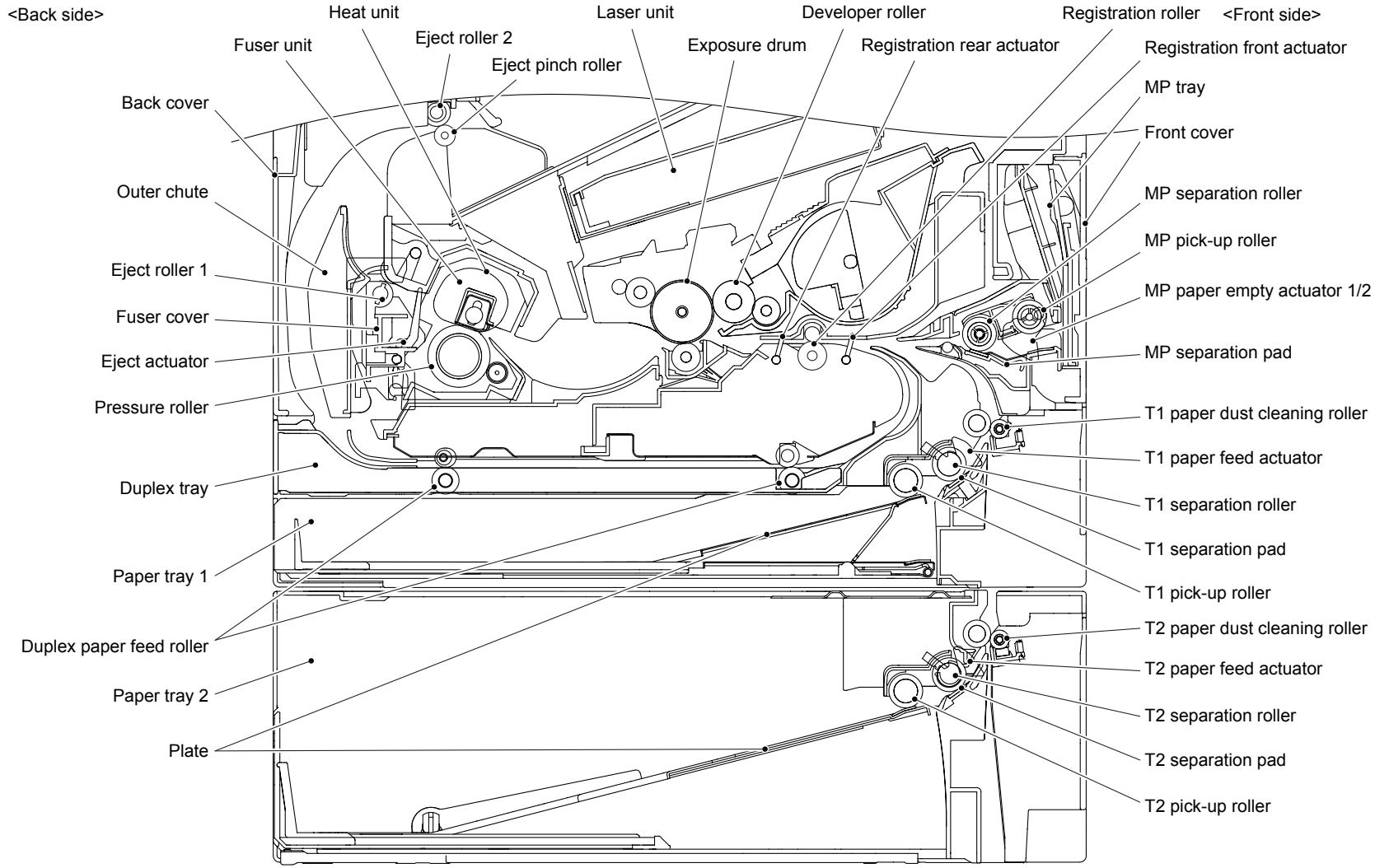

Fig. 2-1

Confidential

2.1.2 ADF unit/Document scanner unit

■ Legal model

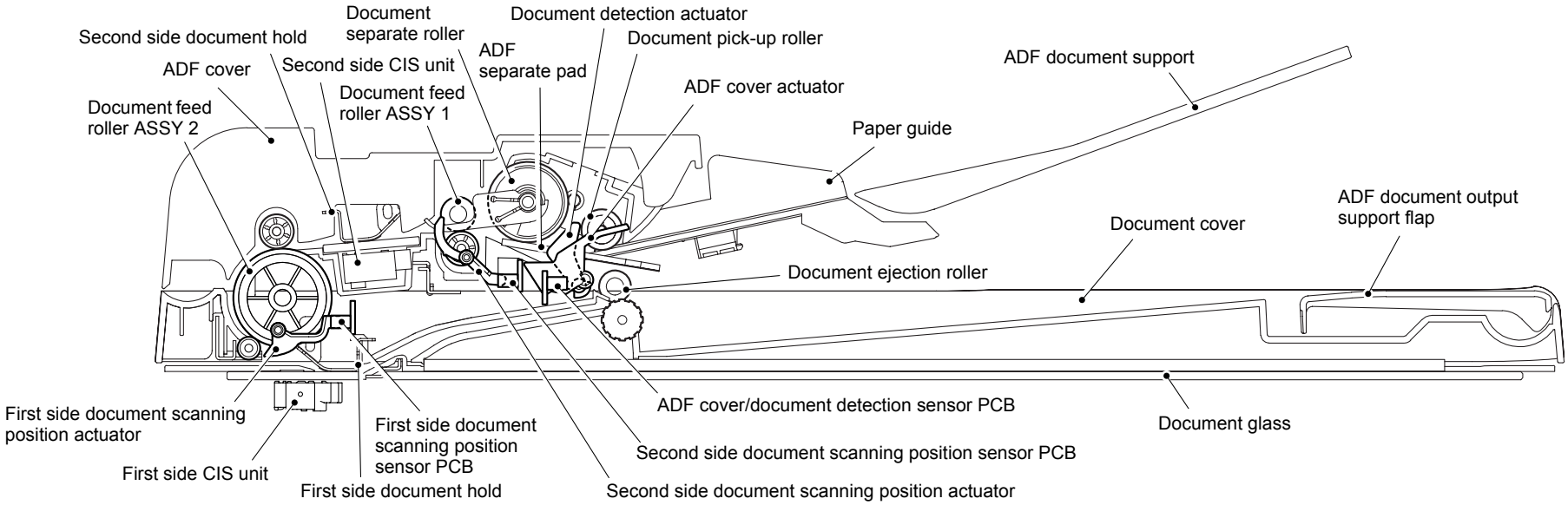

Fig. 2-2

Confidential

■ A4 model

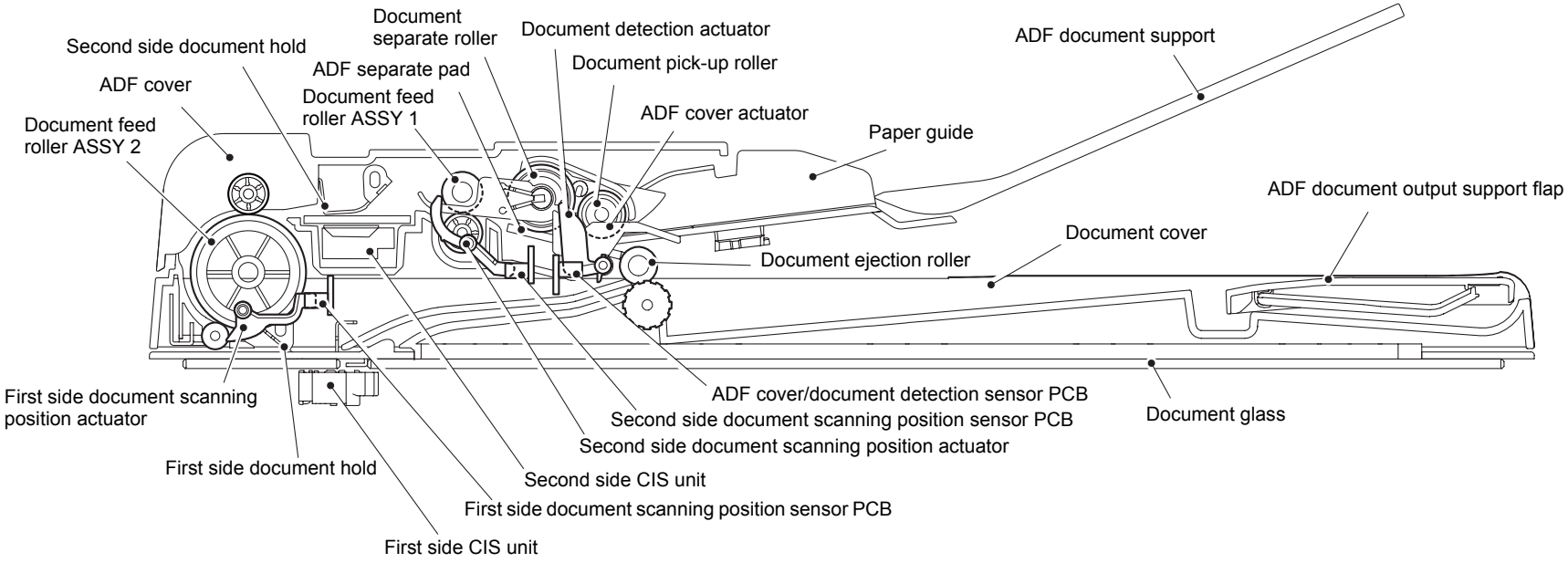

Fig. 2-3

2.2 Paper Feeding

2.2.1 Printer part

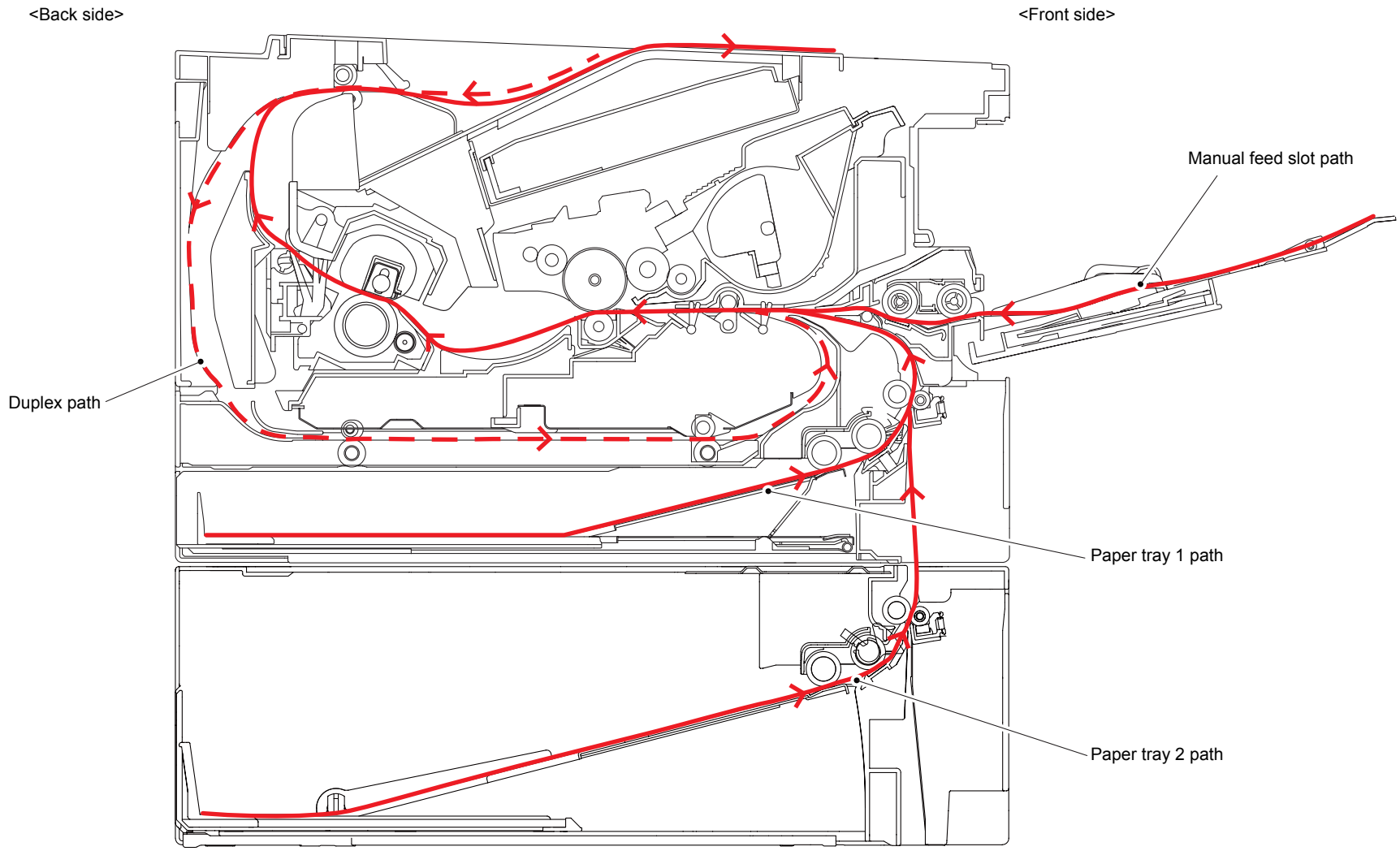

Fig. 2-4

Confidential

2.2.2 Scanning

■ **Legal model**

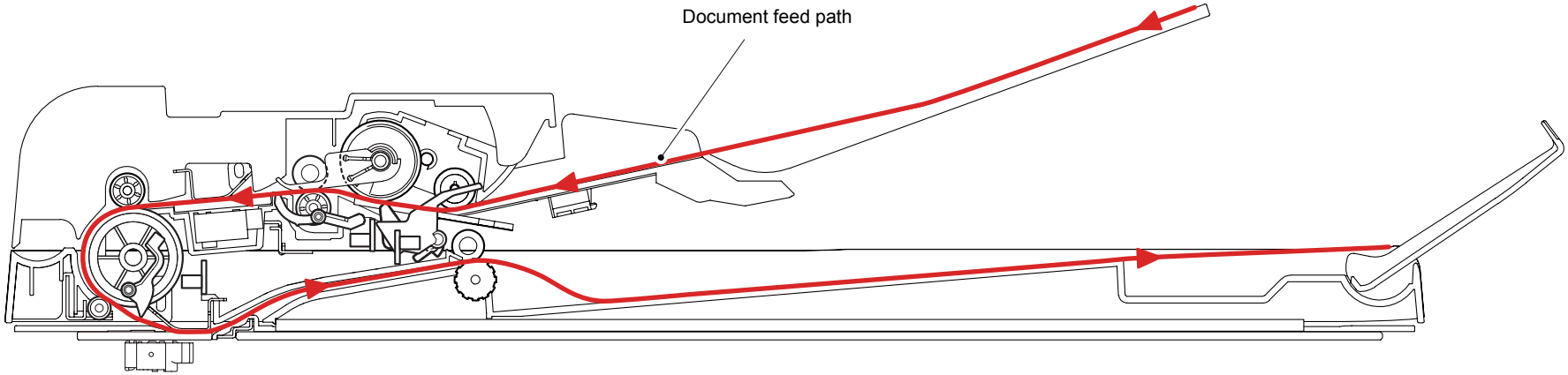

Fig. 2-5

■ **A4 model**

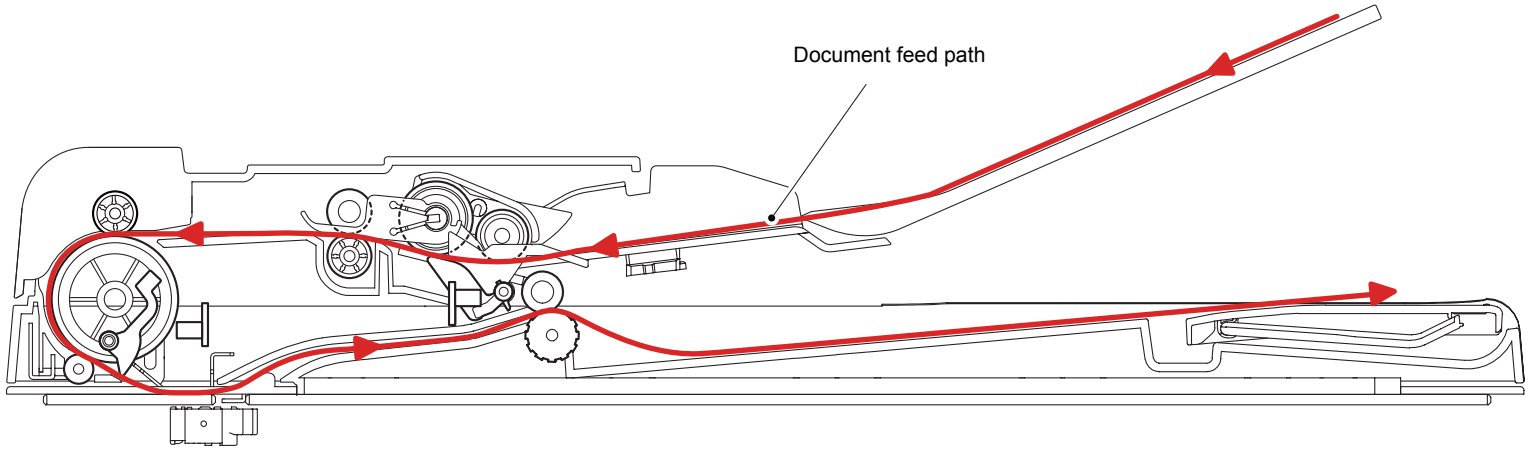

Fig. 2-6

2.3 Operation of Each Part

Part name	Operation
T1 pick-up roller	Picks up the paper from paper tray 1.
T1 separation roller / T1 separation pad	Separates the paper fed from paper tray 1 into single sheets.
T1 paper feed actuator (T1 paper feed sensor)	Detects paper tray 1. Detects a paper jam at the front section of the machine. Detects the rear edge of the paper to determine the feed timing of the next sheet of paper.
Registration front actuator (Registration front sensor)	Detects the front edge of the paper to control the registration roller drive. Detects a paper jam at the front section of the machine.
Registration roller	Corrects the paper alignment when the paper makes contact with the stopped registration roller. Feeds the paper after correction.
Registration rear actuator (Registration rear sensor)	Detects the front edge of the paper to adjust the writing start position. Detects a paper jam at the center section of the machine. Detects the front and rear edges of the paper to determine the paper size.
Heat unit Pressure roller	Fuses the toner transferred to the paper by heat and pressure, and feeds the paper to the eject roller.
Eject actuator (Eject sensor)	Determines whether the paper is ejected from the fuser unit. Detects the rear edge of the paper in duplex printing mode to adjust the eject roller change timing. Detects a paper jam at the rear section of the machine. Determines whether the fuser cover is open when the back cover is open.
Eject roller 1	Feeds the paper ejected from the fuser unit to eject roller 2.
Eject roller 2	Feeds the paper ejected from eject roller 1 to the output tray. In duplex printing mode, rotates conversely after the paper is fed a short distance to feed the paper to the duplex tray.
Duplex paper feed roller	Feeds the paper passing through the duplex tray to the registration roller.
MP pick-up roller	Picks up the paper from the MP tray.
MP separation roller / MP separation pad	Separates the paper fed from the MP tray into single sheets.
MP paper empty actuator 1/2 (MP paper empty sensor)	Detects the paper in the MP tray.
T2 pick-up roller	Picks up the paper from paper tray 2.
T2 separation roller / T2 separation pad	Separates the paper fed from paper tray 2 into single sheets.
T2 paper feed actuator (T2 paper feed sensor)	Detects paper tray 2. Detects a paper jam at the front section of paper tray 2. Determines whether the paper was fed.
Back cover sensor	Detects open back cover or incorrect setting of the duplex tray. (Cannot determine which case applies.)
Front cover sensor	Detects open front cover.
T2 connect sensor	Detects connection of paper tray 2.

Part name	Operation
Toner sensor	Detects the toner remaining in the cartridge. When the toner is below the specified level, the user is notified that the toner cartridge needs replacing soon.
New toner sensor	Detects the toner volume when a new toner cartridge is set. (Does not react to the starter toner cartridge even if it is new.) When a new toner cartridge is detected, the developer roller counter and the developing bias voltage value are reset, and the toner cartridge replacement counter increases by one.
Document detection sensor	Detects whether a document is set in the ADF.
Document scanning position sensor	Detects the scanning start position (Second side / First side).
ADF cover sensor	Detects whether the ADF cover is open or closed.
Internal temperature thermistor	Detects the temperature in the machine.

2.4 Block Diagram

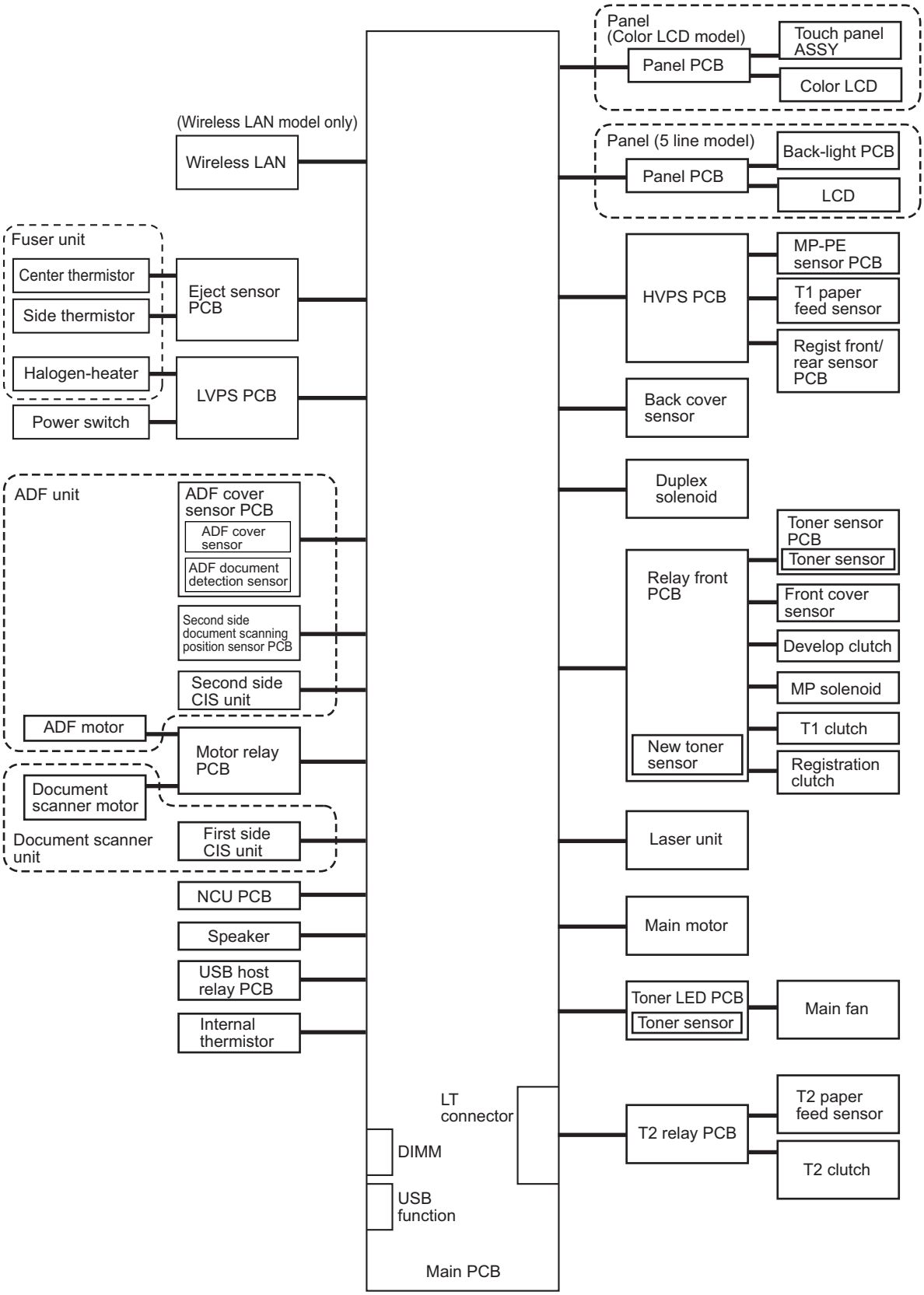

Fig. 2-7

Confidential

2.5 Main Components

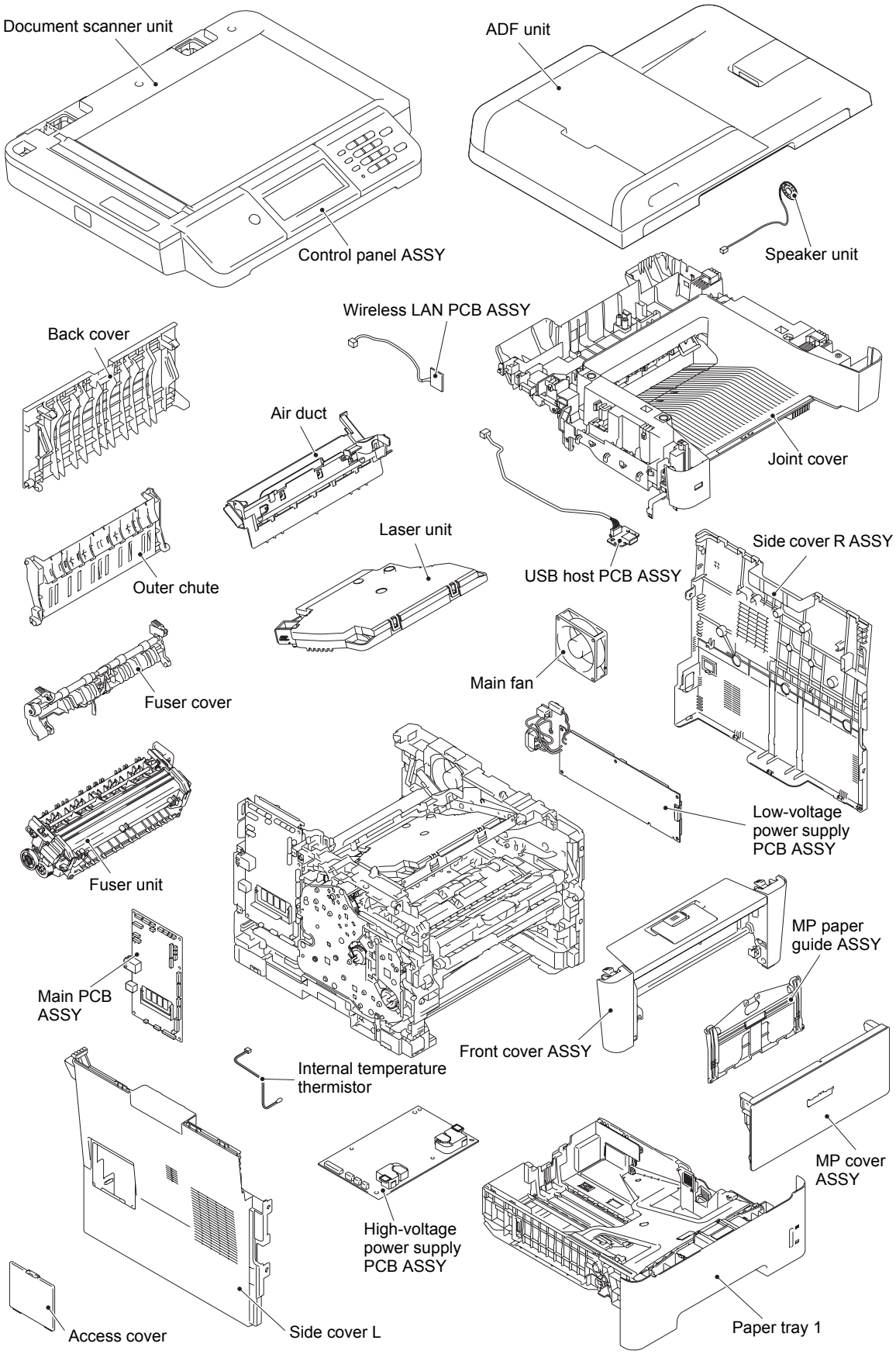

Fig. 2-8

2.6 Life of Toner Cartridge and Drum Unit

■ Life of toner cartridge

<Method of detecting toner volume>

Toner volume is monitored by the toner sensor and by the number of rotations of the developer roller. When the toner sensor detects that the toner has run out or when the number of rotations of the developer roller reaches the limit, "Replace Toner" is displayed.

- Detection by toner sensor

  The machine is equipped with a function to detect the remaining toner by checking the level at which the toner in the cartridge obstructs light from the transmission light sensor.

- Detection by number of rotations of developer roller

  The machine is equipped with a function to detect the limit of the number of rotations of the developer roller before the roller becomes abraded and unusable.

<Relationship between printable pages of toner cartridge and remaining toner>

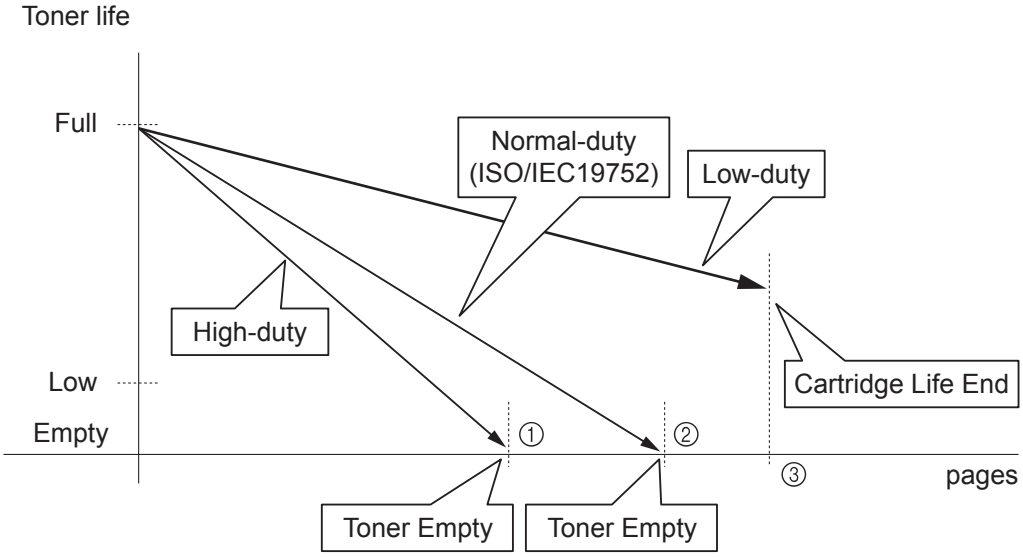

Memo:

- When the number of rotations of the developer roller reaches the limit, a message prompting the user to replace the toner cartridge appears even if some toner remains.

The table below shows the life of toner cartridges, assuming that the print pattern specified by ISO/IEC 19752 is printed. (Point ② in the figure above)

Toner cartridge	Printable pages
Starter	2,000
Standard	3,000
High	8,000
Super high	12,000

To avoid problems caused by abrasion of the developer roller surface or deterioration of the toner sealing, the machine prohibits printing when the number of rotations of the developer roller reaches the limit, displaying a message prompting the user to replace the toner cartridge before the toner runs out. The table below shows the limit of the number of rotations of the developer roller.

Toner cartridge	Limit for rotations of developer roller
Starter	42,000
Standard	54,000
High	102,000
Super high	144,000

<Life of toner cartridge>

The life of the toner cartridge based on the number of rotations of the developer roller (point ③ on the previous page) varies depending on the average number of pages printed per job (see the table below). The number of printable pages is larger when performing continuous printing in one job because deterioration of the developer roller is lower.

Number of rotations of developer roller per A4-size page

Page		No. of rotations
First page	40/42PPM model (A4/Letter)	15.5
	38/40PPM model (A4/Letter)	15.5
	36/38PPM model (A4/Letter)	15.5
Second page and after (when performing continuous printing)	40/42PPM model (A4/Letter)	7.6
	38/40PPM model (A4/Letter)	7.95
	36/38PPM model (A4/Letter)	8.35

Number of rotations of developer roller per operation

Operation	No. of rotations
Warm-up operation after power ON or opening/closing cover	12
Paper tray lift-up operation	8.8
Fuser unit warm-up operation	3.5
Fuser unit warm-up operation (max.) (in environment of low voltage power supply and low temperature)	31.5

* The number of rotations varies according to individual differences in machines and installation environment. The above data is for reference.

Note:

- The figures provided on this page are as of February 2012. These values are subject to change without prior notice.

<Relationship between average number of pages printed per job and life of toner cartridges>
(40/42PPM model)

Average pages printed (page/job)	1	2	3	4	5	6	7	8
Cartridge life (Starter)	2710	3636	4104	4386	4575	4710	4812	4891
Cartridge life (Standard)	3484	4675	5277	5640	5882	6056	6187	6288
Cartridge life (High)	6581	8831	9967	10653	11111	11439	11686	11878
Cartridge life (Super high)	9290	12468	14072	15039	15686	16150	16498	16769

Performing the following operations deteriorates the developer roller: warm-up operation after power ON or opening/closing cover, paper tray lift-up operation, and fuser unit warm-up operation. Therefore, if these operations are performed frequently, the life of toner cartridges becomes shorter. (The table below shows the worst-case scenario where warm-up operation after power ON and fuser unit warm-up operation (max.) are performed before printing.)

<Life of toner cartridge when warm-up operation after power ON and fuser unit warm-up operation (max.) are performed before printing>
(40/42PPM model)

Average pages printed (page/job)	1	2	3	4	5	6	7	8
Cartridge life (Starter)	712	1261	1698	2054	2349	2598	2811	2995
Cartridge life (Standard)	915	1622	2183	2641	3020	3340	3614	3850
Cartridge life (High)	1729	3063	4124	4988	5705	6309	6826	7273
Cartridge life (Super high)	2441	4324	5822	7042	8054	8907	9637	10267

Note:

- The above two data applies to 40/42PPM models (A4/Letter). For 38/40PPM and 36/38PPM models, data for continuous printing is different due to difference in the printing speed.

■ Life of drum unit

<How to read the life of drum unit>

- The band graph indicates 100% initially, and then gradually decreases.
- When the band graph indicates 10%, the machine displays a message prompting the user to replace the drum.

<How to determine the end of life of drum unit>

The end of life of the drum unit is determined based on the "drum counter" or the "number of drum rotations", whichever is larger.

The drum counter is based on the total number of pages printed on each drum unit. The drum counter must be reset every time you replace the drum unit with a new one (refer to <How to reset drum counter> on the next page). Basically, the counter value is equal to the assured number of printable pages of the drum unit. However, if the power switch is turned ON/OFF frequently or the number of pages printed per job is small, only the number of drum rotations increases, and the "page count based on the number of drum rotations" may exceed the "drum counter" based on the total number of pages printed.

Calculation of the page count based on the number of drum rotations shown below.

<How to calculate the page count>

The number of drum rotations for the first page: 12.2

The number of drum rotations per page for the second page and later (continuous printing): 3.8

Page count based on the number of drum rotations = {Number of drum rotations for the first page + [Number of drum rotations per page for the second page and later x (Number of pages in continuous printing - 1)]} / 15

(The divisor "15" is assumed value of the number of drum rotations per page when end users use machines.)

(The number of drum rotations per page is fewer in continuous printing.)

Example: Start printing when machine is in ready state

Continuous pages printed	Page count based on number of drum rotations (pages)
1 page	[12.2 + {3.8 x (1 - 1)}] / 15 = 0.8
2 pages	[12.2 + {3.8 x (2 - 1)}] / 15 = 1.1
18 pages	[12.2 + {3.8 x (18 - 1)}] / 15 = 5.1

When warm-up operation after power ON or opening/closing cover, paper tray lift-up operation, or fuser unit warm-up operation is performed, the number of drum rotations increases. Therefore, if these operations are performed frequently, the life of the drum unit becomes shorter than usual.

The number of drum rotations required for warm-up operation after power ON: 15

Example: When warm-up operation after power ON or opening/closing cover is performed before printing

Continuous pages printed	Page count based on number of drum rotations (pages)
1 page	[15 + 12.2 + {3.8 x (1 - 1)}] / 15 = 1.8
2 pages	[15 + 12.2 + {3.8 x (2 - 1)}] / 15 = 2.1
18 pages	[15 + 12.2 + {3.8 x (18 - 1)}] / 15 = 6.1

The number of drum rotations required for fuser unit warm-up operation (max.): 34.2.

Example: When fuser unit warm-up operation (max.) is performed before printing

Continuous pages printed	Page count based on number of drum rotations (pages)
1 page	[34.2 + 12.2 + {3.8 x (1 - 1)}] / 15 = 3.1
2 pages	[34.2 + 12.2 + {3.8 x (2 - 1)}] / 15 = 3.3
18 pages	[34.2 + 12.2 + {3.8 x (18 - 1)}] / 15 = 7.4

If both the warm-up operation after power ON or opening/closing cover and the fuser unit warm-up operation (max.) are performed, the life of the drum unit becomes much shorter.

Note:

- The figures provided on this page are as of February 2012. These values are subject to change without prior notice.

<How to reset drum counter>

Non touch panel models

(1) Press the [3] and [9] buttons simultaneously in the ready state. Reset Menu is displayed on the LCD.

(2) Press the [▲] or [▼] button to select Drum Unit, and press the [OK] button. "▲ 1.Reset ▼ 2.Exit" is displayed on the LCD.

(3) Press the [1] button. "Accepted" is displayed on the LCD, and the machine returns to the ready state.

Touch panel models

(1) Press the [3] and [9] buttons simultaneously in the ready state. Reset Menu is displayed on the LCD.

(2) Press the [▲] or [▼] button to display Drum Unit, and press the periodical replacement part to be reset.

(3) Press the [Yes] on the LCD. "Accepted" is displayed on the LCD, and the display returns to the Reset Menu.

(4) Press the [Stop/Exit] button, and the machine returns to the ready state.

3. ERROR INDICATIONS

This machine includes a self-diagnosis function. If the machine does not work normally it judges that an error has occurred, and indicates the corresponding error message on the LCD, which in turn helps the service men to quickly find out the problem.

3.1 Error Codes

The errors with a mesh background in the table below do not occur in the normal operation. They might occur due to noise around the installation site, change of the power supply voltage, and failures in the software.

Error codes	Problem	Refer to:	Error codes	Problem	Refer to:
0B00	There was no response from the panel for the specified time for any reason.	2-31	2900	An unidentified error occurred.	2-33
0C01 0C02 0C03 0C04	Log registration failed.	2-31	2A00	An unidentified error occurred.	2-33
0D00	An unidentified error occurred.	2-31	2B00	An unidentified error occurred.	2-33
0E00	Communication between the panel PCB and the main PCB cannot be established at machine startup.	2-32	2C00	An unidentified error occurred.	2-33
0F00	The back cover sensor detected that the cover was open in duplex printing mode.	2-32	2D00	An unidentified error occurred.	2-33
1000	An unidentified error occurred.	2-32	2E00	An unidentified error occurred.	2-33
1100	An unidentified error occurred.	2-32	2F00	An unidentified error occurred.	2-33
1200	An unidentified error occurred.	2-32	3000	An unidentified error occurred.	2-33
1600	An unidentified error occurred.	2-32	3100	An unidentified error occurred.	2-33
1700	An unidentified error occurred.	2-32	3200	An unidentified error occurred.	2-33
1800	An unidentified error occurred.	2-32	3300	An unidentified error occurred.	2-33
1900	An unidentified error occurred.	2-32	3400	An unidentified error occurred.	2-33
1A00	An unidentified error occurred.	2-32	3500	An unidentified error occurred.	2-33
1B00	An unidentified error occurred.	2-32	3600	An error occurred in the high-voltage power supply PCB.	2-34
1C00	An unidentified error occurred.	2-32	3700	An unidentified error occurred.	2-34
1D00	An unidentified error occurred.	2-32	3800	An unidentified error occurred.	2-34
1E00	The number of rotations of the drum unit is reaching the life limit.	2-33	3900	An unidentified error occurred.	2-34
1F00	An unidentified error occurred.	2-33	3A00	An unidentified error occurred.	2-34
2000	An unidentified error occurred.	2-33	3B00	An error occurred during access to the DRAM in the main PCB.	2-34
2100	An unidentified error occurred.	2-33	3C00	An unidentified error occurred.	2-34
2200	An unidentified error occurred.	2-33	3D00	An unidentified error occurred.	2-34
2300	An unidentified error occurred.	2-33	3E00	An unidentified error occurred.	2-34
2400	An error occurred in the internal temperature thermistor.	2-33	3F00	An unidentified error occurred.	2-34
2500	An unidentified error occurred.	2-33	4000	An unidentified error occurred.	2-34
2600	An unidentified error occurred.	2-33	4200	An unidentified error occurred.	2-34
2700	An unidentified error occurred.	2-33	4300	An unidentified error occurred.	2-34
2800	An unidentified error occurred.	2-33	4400	The toner sensor detected that the toner cartridge was not set.	2-35

Error codes	Problem	Refer to:	Error codes	Problem	Refer to:
4500	An unidentified error occurred.	2-35	5B00	An unidentified error occurred.	2-38
4600	An unidentified error occurred.	2-35	5C00	An unidentified error occurred.	2-38
4700	An unidentified error occurred.	2-35	5D00	An unidentified error occurred.	2-38
4800	An unidentified error occurred.	2-35	5E00	An unidentified error occurred.	2-38
4900	An unidentified error occurred.	2-35	5F00	An unidentified error occurred.	2-38
4A00	An unidentified error occurred.	2-35	6000	An unidentified error occurred.	2-38
4B00	An unidentified error occurred.	2-35	6100	An unidentified error occurred.	2-38
4C00	An unidentified error occurred.	2-35	6200	An unidentified error occurred.	2-38
4D00	An unidentified error occurred.	2-35	6300	The toner sensor detected no toner remaining or the number of rotations of the developer roller has reached the upper limit.	2-39
4E00	An unidentified error occurred.	2-35	6400	An unidentified error occurred.	2-39
4F00	An unidentified error occurred.	2-35	6500	An unidentified error occurred.	2-39
5000	The number of rotations of the drum unit has reached the life limit. (Printing does not stop.)	2-35	6600	An unidentified error occurred.	2-39
5100	Printable pages set for the MP paper feeding kit have reached the limit. (Printing does not stop.)	2-36	6700	The toner sensor detected that the toner remaining has fallen below the specified level or the developer roller counter has exceeded the specified value.	2-39
5200	Printable pages set for paper feeding kit 1 have reached the limit. (Printing does not stop.)	2-36	6800	An unidentified error occurred.	2-39
5300	Printable pages set for paper feeding kit 2 have reached the limit. (Printing does not stop.)	2-36	6900	An unidentified error occurred.	2-39
5400	Printable pages set for the fuser unit have reached the limit. (Printing does not stop.)	2-36	6A00	The center thermistor of the fuser unit has not reached the specified temperature within the specified time.	2-40
5500	Printable pages set for the laser unit have reached the limit. (Printing does not stop.)	2-36	6B00	The center thermistor of the fuser unit has not reached the specified temperature within the specified time.	2-40
5600	The eject sensor detected that the fuser cover was open.	2-37	6C00	The center thermistor of the fuser unit detected a temperature higher than the specified value.	2-40
5700	The registration front sensor does not detect paper pass within the specified time after the first side was printed in duplex printing mode.	2-37	6D00	After the heat unit was heated normally, the center thermistor of the fuser unit detected a temperature lower than the specified value.	2-40
5800	Any of error codes 6A00 to 6F00, 7600, 7800, DD00,DE00, or E200 (fuser unit error) occurred when the power switch was turned ON or sleep mode was released.	2-38	6E00	The center thermistor of the fuser unit detected that the heat unit was not heated.	2-40
5900	Rechecking the error after the power switch was turned OFF and then ON again because an error was detected by the center thermistor of the fuser unit. (This message is displayed for approximately 15 minutes when the machine is restarted after error code 5800 has occurred.)	2-38	6F00	The center thermistor or the side thermistor of the fuser unit detected a temperature error.	2-40
5A00	An unidentified error occurred.	2-38	7000	An unidentified error occurred.	2-41

Error codes	Problem	Refer to:	Error codes	Problem	Refer to:
7100	Detected an error in the synchronized signal of the polygon motor for the laser unit.	2-41	8300	Detected discharge when the number of rotations of the drum has exceeded twice the life limit.	2-44
7200	Cannot detect the signal from the beam detecting sensor for the laser unit.	2-41	8400	The eject sensor remains ON (paper pass detected) for more than the specified time even after the registration rear sensor detected the end of paper pass.	2-44
7300	An unidentified error occurred.	2-41	8500	The T1 paper feed sensor detected that paper tray 1 was not set.	2-45
7400	An unidentified error occurred.	2-41	8600	An unidentified error occurred.	2-45
7500	The internal temperature thermistor detected a temperature higher than the specified value.	2-41	8700	An unidentified error occurred.	2-45
7600	The center thermistor of the fuser unit detected a temperature rise greater than the specified value within the specified time.	2-42	8800	The eject sensor does not detect paper pass after the registration rear sensor detected the end of paper pass.	2-45
7800	The center thermistor of the fuser unit detected a temperature fall greater than the specified value within the specified time.	2-42	8900	The registration front sensor detected that the paper fed was smaller than or larger than the specified size in duplex printing mode.	2-46
7A00	Cannot detect the synchronized signal of the main motor. The speed of the main motor does not stabilize within the specified time.	2-42	8A00	The registration front sensor does not detect paper pass within the specified time after the T1 paper feed sensor detected paper pass.	2-46
7B00	An unidentified error occurred.	2-43	8B00	The registration front sensor does not detect paper pass within the specified time after the T2 paper feed sensor detected paper pass.	2-46
7C00	An unidentified error occurred.	2-43	8C00	The registration front sensor does not detect paper pass within the specified time after the paper was picked up from the MP tray.	2-47
7D00	Detected discharge that may be attributable to dirty corona wire on the drum unit.	2-43	8D00	When the power switch was turned ON, the eject sensor detected paper pass or detected that the fuser cover was open.	2-47
7E00	An unidentified error occurred.	2-43	8E00	An unidentified error occurred.	2-47
7F00	An unidentified error occurred.	2-43	8F00	An unidentified error occurred.	2-47
8000	The registration front sensor detected that the paper length was too short when faxing or printing a list or report.	2-43	8F01	When copying from the MP tray, the size of paper set in the MP tray does not match the size specified by the driver.	2-48
8100	An unidentified error occurred.	2-44	8F02	When copying from paper tray 1, the size of paper set in paper tray 1 does not match the size specified by the driver.	2-48
8200	An unidentified error occurred.	2-44	8F03	When copying from paper tray 2, the size of paper set in paper tray 2 does not match the size specified by the driver.	2-48

Error codes	Problem	Refer to:	Error codes	Problem	Refer to:
9000	When printing from the MP tray, the size of paper set in the MP tray does not match the size specified by the driver.	2-48	A000	Image processing cannot be completed correctly because the number of pixels required for image processing is insufficient in the scanned data for the second side of the document.	2-53
9100	When printing from paper tray 1, the size of paper set in paper tray 1 does not match the size specified by the driver.	2-48	A100	The front cover sensor detected that the front cover was open.	2-53
9200	When printing from paper tray 2, the size of paper set in paper tray 2 does not match the size specified by the driver.	2-48	A200	The first side document scanning position sensor detected that the document length was 90 cm or more while scanning the document.	2-54
9300	When printing from the MP tray, the MP paper empty sensor detected that there was no paper set in the MP tray.	2-49	A300	The first side document scanning position sensor has not detected the top of the document even after the document has been fed for the specified distance.	2-54
9400	When printing from paper tray 1, the T1 paper feed sensor detected that there was no paper set in paper tray 1.	2-49	A400	The ADF cover sensor detected that the ADF cover was open.	2-55
9500	When printing from paper tray 2, the T2 paper feed sensor detected that there was no paper set in paper tray 2.	2-50	A500	When scanning the fax, white or black correction data for the first side CIS was not within the correct range.	2-55
9600	When printing with the tray designation set to AUTO, the MP paper empty sensor, T1 paper feed sensor and T2 paper feed sensor all detected that there was no paper set in the MP tray, paper tray 1 and paper tray 2.	2-50	A600	Although operation was retried due to error A500 that occurred while scanning the fax, white or black correction data for the first side CIS was not within the correct range.	2-55
9700	When printing from paper tray 1, a paper size not supported for paper tray 1 was specified from the driver.	2-51	A700	Color parameter in the ROM does not match the first side CIS.	2-56
9800	When printing from paper tray 2, a paper size not supported for paper tray 2 was specified from the driver.	2-51	A800	An error was detected in the color parameter in the ROM during image processing.	2-56
9900	A paper size not supported for duplex printing was specified from the driver.	2-51	A900	A scanning error occurred while scanning the image.	2-56
9A00	There is no paper set in the MP tray while feeding from the Manual is fixed.	2-52	AA00	An unidentified error occurred.	2-56
9B00	An unidentified error occurred.	2-52	AB00	An unidentified error occurred.	2-56
9C00	An unidentified error occurred.	2-52	AC00	When scanning the fax, white or black correction data for the second side CIS was not within the correct range.	2-57
9D00	An unidentified error occurred.	2-52	AD00	Image processing cannot be completed correctly because the number of pixels required for image processing is insufficient in the scanned data for the front side of the document.	2-57
9E00 9F00	An unidentified error occurred.	2-52	AE00	An unidentified error occurred.	2-57
9F01	The T1 paper feed sensor detected that paper has run out during faxing or printing a list or report.	2-52	AF00	Home position is still being detected even after the first side CIS for the document scanner unit was moved.	2-57

Error codes	Problem	Refer to:	Error codes	Problem	Refer to:
B000	Detected that the first side CIS flat cable or second side CIS flat cable was not inserted correctly.	2-58	C800	The memory size allotted for Secure Print was exceeded when saving Secure Print data.	2-61
B100	An unidentified error occurred.	2-58	CA00	A USB device not within the specifications is connected to the USB terminal, resulting in overcurrent.	2-62
B200	An unidentified error occurred.	2-58	CB00	An unidentified error occurred.	2-62
B300	An unidentified error occurred.	2-58	CC00	An unidentified error occurred.	2-62
B400	An unidentified error occurred.	2-58	CD00	An unidentified error occurred.	2-62
B500	An unidentified error occurred.	2-58	CE00	An unidentified error occurred.	2-62
B600	An unidentified error occurred.	2-58	CF00	An unidentified error occurred.	2-62
B700	The voltage value was above the upper limit during scanning.	2-58	D000	An error occurred while initializing the touch panel.	2-62
B800	The voltage value was below the lower limit during scanning.	2-58	D100	An error occurred while initializing the modem.	2-62
B900	The white level does not increase during scanning although the light intensity was increased.	2-58	D200	An unidentified error occurred.	2-62
BA00	An unidentified error occurred.	2-59	D300	An unidentified error occurred.	2-62
BB00	A white level not within the standard was scanned when function code 55 was executed.	2-59	D400	An unidentified error occurred.	2-62
BC00	Although operation was retried due to error AC00 that occurred while scanning the fax, white or black correction data for the second side CIS was not within the correct range.	2-59	D500	An unidentified error occurred.	2-62
BD00	A black level not within the standard was scanned when function code 55 was executed.	2-59	D600	An unidentified error occurred.	2-62
BE00	An unidentified error occurred.	2-60	D700	An unidentified error occurred.	2-62
BF00	The second side document scanning position sensor detected that the ADF was unable to duplex-feed the document because the document is too long.	2-60	D800	An unidentified error occurred.	2-62
C000	The new toner sensor could not detect the new toner cartridge correctly.	2-60	D900	An unidentified error occurred.	2-62
C100	An unidentified error occurred.	2-61	DA00	An unidentified error occurred.	2-62
C200	An unidentified error occurred.	2-61	DB00	An unidentified error occurred.	2-62
C300	An unidentified error occurred.	2-61	DC00	An unidentified error occurred.	2-62
C400	An unidentified error occurred.	2-61	DD00	Fuser unit error (except error codes 6A00 to 6F00, 7600, 7800, DE00, and E200)	2-63
C500	An unidentified error occurred.	2-61	DE00	When the center thermistor of the fuser unit is higher than the idle temperature, the side thermistor detected a temperature lower than the specified temperature.	2-63
C600	An unidentified error occurred.	2-61	DF00	An unidentified error occurred.	2-64
C700	There is insufficient memory to expand PC-print data.	2-61	E000	An error occurred in the ROM check sum.	2-64

Error codes	Problem	Refer to:	Error codes	Problem	Refer to:
E100	Program error	2-64	F100	An unidentified error occurred.	2-68
E200	When the center thermistor of the fuser unit is higher than the idle temperature, the side thermistor detected a temperature higher than the specified temperature.	2-65	F200	An unidentified error occurred.	2-68
E300	An unidentified error occurred.	2-65	F300	An unidentified error occurred.	2-68
E400	An unidentified error occurred.	2-65	F400	An unidentified error occurred.	2-68
E600	Write error in the EEPROM of the main PCB	2-65	F500	An unidentified error occurred.	2-68
E700	An unidentified error occurred.	2-66	F600	An unidentified error occurred.	2-68
E800	An unidentified error occurred.	2-66	F800	An unidentified error occurred.	2-68
E900	An unidentified error occurred.	2-66	F900	The country code was not entered correctly.	2-68
EA00	An unidentified error occurred.	2-66	FA00	An unidentified error occurred.	2-68
EB00	An unidentified error occurred.	2-66	FB00	An unidentified error occurred.	2-68
EC00	Detected a main fan failure.	2-66	FC00	An unidentified error occurred.	2-68
ED00	Communication between the wireless LAN PCB and the main PCB cannot be established at machine startup.	2-66	FD00	An unidentified error occurred.	2-68
EE00	Detected communication failure after communication between the wireless LAN PCB and the main PCB was established.	2-67	FE00	An unidentified error occurred.	2-68
EF00	Unstable power supply was detected.	2-67	FF00	An unidentified error occurred.	2-68
F000	Malfunction of the flash memory on the main PCB	2-67			

Confidential

3.2 Error Messages

The error messages displayed on the LCD of the machine and their description are shown in the table below.

Error Message	Description	Error codes	Refer to:
Access Error	The device was removed during data processing.	---	
Cartridge Error	The new toner sensor could not detect the new toner cartridge correctly.	C000	2-60
Cooling Down	The internal temperature thermistor detected a temperature higher than the specified value.	7500	2-41
Cover is Open	The eject sensor detected that the fuser cover was open.	5600	2-37
	When the power switch was turned ON, the eject sensor detected paper pass or detected that the fuser cover was open.	8D00	2-47
	The front cover sensor detected that the front cover was open.	A100	2-53
	The ADF cover sensor detected that the ADF cover was open.	A400	2-55
DIMM Error	Detected that DIMM was faulty or was mounted incorrectly.	---	2-98
Document Jam	The first side document scanning position sensor detected that the document length was 90 cm or more while scanning the document.	A200	2-54
	The first side document scanning position sensor has not detected the top of the document even after the document has been fed for the specified distance.	A300	2-54
Drum Error	Detected discharge that may be attributable to dirty corona wire on the drum unit.	---	2-43
Drum Stop	Detected discharge when the number of rotations of the drum has exceeded twice the life limit.	8300	2-44
Duplex Disabled	The back cover sensor detected that the cover was open in duplex printing mode.	0F00	2-32
Fuser Error	An error occurred in the fuser unit when the power switch was turned ON or sleep mode was released.	5800 6A00 6B00 6C00 6D00 6E00 6F00 7600 7800 DD00 DE00 E200	2-38 2-40 2-40 2-40 2-40 2-40 2-40 2-42 2-42 2-63 2-63 2-65
Ignore Data	Detected undecodable data during printing. Received undecodable PS data.	---	
Jam Duplex	The registration front sensor does not detect paper pass within the specified time after the first side was printed in duplex printing mode.	5700	2-37
Jam Inside	The eject sensor does not detect paper pass after the registration rear sensor detected the end of paper pass.	8800	2-45

Error Message	Description	Error codes	Refer to:
Jam MP Tray	The registration front sensor does not detect paper pass within the specified time after the paper was picked up from the MP tray.	8C00	2-47
Jam Rear	The eject sensor remains ON (paper pass detected) for more than the specified time even after the registration rear sensor detected the end of paper pass.	8400	2-44
Jam Tray 1	The registration front sensor does not detect paper pass within the specified time after the T1 paper feed sensor detected paper pass.	8A00	2-46
Jam Tray 2	The registration front sensor does not detect paper pass within the specified time after the T2 paper feed sensor detected paper pass.	8B00	2-46
Log Access Error	Log registration failed.	0C01 0C02 0C03 0C04	2-31
Machine Error F9	The country code was not entered correctly.	F900	2-68
Manual Feed	There is no paper set in the MP tray when feeding from the Manual is designated from the driver.	9A00	2-52
No HUB Support	A USB device with a built-in hub is connected to the USB terminal.	---	
No Paper	When printing from the MP tray, the MP paper empty sensor detected that there was no paper set in the MP tray.	9300	2-49
	When printing from paper tray 1, the T1 paper feed sensor detected that there was no paper set in paper tray 1.	9400	2-49
	When printing from paper tray 2, the T2 paper feed sensor detected that there was no paper set in paper tray 2.	9500	2-50
	When printing with the tray designation set to AUTO, the MP paper empty sensor, T1 paper feed sensor and T2 paper feed sensor all detected that there was no paper set in the MP tray, paper tray 1 and paper tray 2.	9600	2-50
No Toner	The toner sensor detected that the toner cartridge was not set.	4400	2-35
No Tray	The T1 paper feed sensor detected that paper tray 1 was not set.	8500	2-45
Out of Memory	There is insufficient memory to expand PC-print data.	C700	2-61
	The memory size allotted for Secure Print was exceeded when saving Secure Print data.	C800	2-61
	The program cannot be updated due to insufficient memory.	---	2-92
Replace Parts Drum	The number of rotations of the drum unit has reached the life limit. (Printing does not stop.)	5000	2-35
Replace Parts Fuser Unit	Printable pages set for the fuser unit have reached the limit. (Printing does not stop.)	5400	2-36
Replace Parts Laser Unit	Printable pages set for the laser unit have reached the limit. (Printing does not stop.)	5500	2-36

Confidential

Error Message	Description	Error codes	Refer to:
Replace Parts PF Kit 1	Printable pages set for paper feeding kit 1 have reached the limit. (Printing does not stop.)	5200	2-36
Replace Parts PF Kit 2	Printable pages set for paper feeding kit 2 have reached the limit. (Printing does not stop.)	5300	2-36
Replace Parts PF Kit MP	Printable pages set for the MP paper feeding kit have reached the limit. (Printing does not stop.)	5100	2-36
Replace Toner	The toner sensor detected no toner remaining or the number of rotations of the developer roller has reached the upper limit.	6300	2-39
Scanner Error	The voltage value was above the upper limit during scanning.	B700	2-58
	The voltage value was below the lower limit during scanning.	B800	2-58
	The white level does not increase during scanning although the light intensity was increased.	B900	2-58
	A white level not within the standard was scanned when function code 55 was executed.	BB00	2-59
	A black level not within the standard was scanned when function code 55 was executed.	BD00	2-59
Self-Diagnostic	Rechecking the error after the power switch was turned OFF and then ON again because an error was detected by the center thermistor of the fuser unit. (This message is displayed for approximately 15 minutes when the machine is restarted after error code 5800 has occurred.)	5900	2-38
Size Error	When printing from paper tray 1, a paper size not supported for paper tray 1 was specified from the driver.	9700	2-51
	When printing from paper tray 2, a paper size not supported for paper tray 2 was specified from the driver.	9800	2-51
Size Error DX	The registration front sensor detected that the paper fed was smaller than or larger than the specified size in duplex printing mode.	8900	2-46
	Printed on a paper size not supported for duplex printing was specified from the driver.	9900	2-51
Size Mismatch	The registration front sensor detected that the paper length was too short when faxing or printing a list or report.	8000	2-43
	When printing from the MP tray, the size of paper set in the MP tray does not match the size specified by the driver.	9000	2-48
	When printing from paper tray 1, the size of paper set in paper tray 1 does not match the size specified by the driver.	9100	2-48
	When printing from paper tray 2, the size of paper set in paper tray 2 does not match the size specified by the driver.	9200	2-48
Toner Low	The toner sensor detected that the toner remaining has fallen below the specified level or the developer roller counter has exceeded the specified value.	6700	2-39

Confidential

Error Message	Description	Error codes	Refer to:
Unusable Device	A USB device not within the specifications is connected to the USB terminal, resulting in overcurrent.	CA00	2-62
Wrong Paper Size	While printing with the tray designation set to AUTO, the tray automatically changes when paper in the current tray has run out. However, the paper size in the next tray differs from that in the previous tray.	---	
Wrong Password	Incorrect password was entered when performing Secure Print or Setting Lock.	---	

Confidential

3.3 Communication Errors

Code 1	Code 2	Cause	Refer to.
10	07	No document set when calling.	2-97
10	08	Wrong fax number called.	2-97
11	01	No dial tone detected before dialing.	2-97
11	02	Busy tone detected before dialing.	2-97
11	03	2nd dial tone not detected.	2-97
11	05	No loop current detected.	2-97
11	06	Busy tone detected after dialing or called.	2-97
11	07	No response from the remote station in sending.	2-97
11	10	No tone detected after dialing.	2-97
11	11	No acknowledgement returned after Fax2 net command was sent.	2-97
17	01	Called using a dial number that cannot be used for the NGN line (33 digits or longer or non numeric characters).	2-97
17	07	No response from the remote station in receiving.	2-97
1C	01	Detected that access to the NGN line was not authorized. (T38: 403 Forbidden)	2-97
1C	02	No file or folder (directory) found as a result of search via the NGN line. (T38: 404 Not Found)	2-97
1C	03	Remote station does not support the NGN line. (T38: 488 Not Acceptable Here)	2-97
1C	04	SIP (Session Initiation Protocol) connection not possible. (T38) USW NGN fax setting is OFF or calling attempted before acquisition of SIP information.	2-97
1C	05	Internal error detected in the communication network. (T38)	2-97
1C	06	SIP Server timeout (T38)	2-97
1C	08	An error other than 1C01, 1C02, 1C03, 1C04, 1C06, 1D01, 1D02 and 1D04 was detected.	2-97
1D	01	Detected that the NGN line was busy. (T38: 486 Busy)	2-97
1D	02	Detected that the NGN line was temporarily unavailable. (T38: 480 Temporarily Unavailable)	2-97
1D	04	Network cable not connected (Link Down detected) or not connected to the Network. (T38)	2-97
20	01	Unable to detect flag field.	2-97
20	02	Carrier was OFF for 200 ms or longer.	2-97
20	03	Abort detected ("1" in succession for 7 bits or more).	2-97
20	04	Overrun detected.	2-97
20	05	A frame received for 3 seconds or more.	2-97
20	06	CRC error in answerback.	2-97
20	07	Echo command received.	2-97
20	08	Invalid command received.	2-97
20	09	Command ignored once for document setting or for damping-out at turn-around transmission.	2-97
20	0A	T5 time-out error	2-97
20	0B	CRP received.	2-97
20	0C	EOR or NULL received.	2-97

Code 1	Code 2	Cause	Refer to.
20	0D	Corresponding command not received although the FIF command sending bit is ON.	2-97
20	0E	EOR command received.	2-97
20	13	Line disconnected without receiving DCN after receiving the last page. (After receiving EOP and sending CFR, received BYE before receiving DCN. (T38)	2-97
32	01	Remote terminal only with V.29 capability in 2,400 or 4,800 bps transmission.	2-97
32	02	Remote terminal not ready for polling.	2-97
32	10	Remote terminal not equipped with password function or its password switch is OFF.	2-97
32	11	Remote terminal not equipped with or not ready for confidential mailbox function.	2-97
32	12	Remote terminal not equipped with or not ready for relay broadcasting function.	2-97
32	13	No confidential mail in the remote terminal.	2-97
32	14	Available memory space of the remote terminal is less than that required for reception of confidential mails or relay broad-casting instruction.	2-97
32	15	Remote terminal not equipped with Cipher receiving function.	2-97
32	16	Remote terminal not equipped with SEP function.	2-97
32	17	Remote terminal not equipped with SUB function.	2-97
32	18	Remote terminal not equipped with color function.	2-97
40	02	Illegal coding system requested.	2-97
40	03	Illegal recording width requested.	2-97
40	05	ECM requested although not allowed.	2-97
40	06	Polled while not ready.	2-97
40	07	No document to be sent when polled.	2-97
40	10	Nation code or manufacturer code not correct.	2-97
40	11	Group number not registered for relay broad-casting was specified or the number of addressees specified exceeded the maximum allowable number.	2-97
40	12	Retrieval attempted while not ready for retrieval.	2-97
40	13	Polled by any other manufacturers' terminal while waiting for secure polling.	2-97
40	14	Common key not registered although it needs to be used.	2-97
40	17	Invalid resolution selected.	2-97
40	20	Invalid full color mode selected.	2-97
50	01	Vertical resolution capability changed after compensation of background color.	2-97
63	01	Password plus "lower 4 digits of telephone number" not coincident	2-97
63	02	Password not correct	2-97
63	03	Polling ID not correct	2-97
63	04	Specified confidential ID and MailBox ID do not match.	2-97
63	05	Relay broad-casting ID not correct	2-97
63	06	Specified Retrieval ID and MailBox Retrieval ID do not match.	2-97

Confidential

Code 1	Code 2	Cause	Refer to.
63	07	Select receiving ID not correct	2-97
74	XX	DCN received	2-97
80	01	Fallback impossible.	2-97
90	01	Unable to detect video signals or commands within 6 seconds after CFR is transmitted.	2-97
90	02	Received PPS containing invalid page count or block count.	2-97
A0	03	Error correction sequence not terminated even at final transmission speed after fallback.	2-97
A0	11	Receive buffer empty (5-second time-out)	2-97
A0	12	Receive buffer full during operation except receiving into memory.	2-97
A0	13	Decoding error continued on 500 lines or more.	2-97
A0	14	Decoding error continued for 15 seconds or more.	2-97
A0	15	Time-out: 13 seconds or more for one-line transmission.	2-97
A0	16	RTC not found or carrier OFF detected for 6 seconds.	2-97
A0	17	RTC found but no command detected for 60 seconds or more.	2-97
A0	19	No video data to be sent.	2-97
A0	20	Cannot continue receiving color fax (remaining ink low).	2-97
A8	01	RTN, PIN, or ERR received (sending terminal).	2-97
A9	01	RTN, PIN, or ERR sent (receiving terminal).	2-97
AA	18	Receive buffer full during receiving into memory.	2-97
B0	01	Polarity reversion detected.	2-97
B0	02	Unable to receive the next-page data.	2-97
B0	03	Unable to receive polling even during turn-around transmission due to call reservation.	2-97
B0	04	PC interface error.	2-97
C0	01	No common modulation mode or failed to poll.	2-97
C0	02	Unable to detect JM.	2-97
C0	03	Unable to detect CM.	2-97
C0	04	Unable to detect CJ.	2-97
C0	10	Cannot finish V. 34 negotiation or training.	2-97
C0	11	Modem error detected during V. 34 negotiation or training.	2-97
C0	20	Modem error detected during sending of commands.	2-97
C0	21	Modem error detected during receiving of commands.	2-97
C0	22	Control channel connection time-out.	2-97
C0	30	Modem error detected during sending of video signals.	2-97
C0	31	Modem error detected during receiving of video signals.	2-97
E0	01	Failed to detect 1,300 Hz signal in burn-in operation.	2-97
E0	02	Failed to detect PB signals in burn-in operation.	2-97
E0	03	Unable to detect commands in burn-in operation when RS232C is used.	2-97

Confidential

4. TROUBLESHOOTING

LCD displays shown below are described based on the 5-line model. Only the first line is applicable to color LCD models.

4.1 Error Cause and Remedy

■ Error code 0B00

```
---
```

There was no response from the panel for the specified time for any reason.

Step	Cause	Remedy
1	Panel PCB failure	Replace the panel PCB ASSY.
2	Touch panel PCB failure	Replace the touch panel PCB ASSY.
3	Main PCB failure	Replace the main PCB ASSY.

■ Error codes 0C01/0C02/0C03/0C04

```
Log Access Error.
```

Log registration failed.

<User Check>

- Follow the User's Guide to set the network again.

Step	Cause	Remedy
1	Main PCB failure	Replace the main PCB ASSY.

■ Error code 0D00

This error does not usually occur during normal use. The possible causes are noise around the installation site, fluctuation of the power supply voltage, and failures in the software.

```
---
```

An unidentified error occurred.

Step	Cause	Remedy
1	Main PCB failure	Replace the main PCB ASSY.

■ Error code 0E00

```
---
```

Communication between the panel PCB and the main PCB cannot be established at machine startup.

Step	Cause	Remedy
1	Connection failure of the panel PCB harness	Reconnect the panel PCB harness.
2	Panel PCB failure	Replace the panel PCB ASSY.
3	Touch panel PCB failure	Replace the touch panel PCB ASSY.
4	Main PCB failure	Replace the main PCB ASSY.

■ Error code 0F00

```
Duplex Disabled
Close the Back Cover of the machine and put the Duplex Tray back in.
```

The back cover sensor detected that the cover was open in duplex printing mode.

<User Check>

- Close the back cover.
- Set the duplex tray.

Step	Cause	Remedy
1	Connection failure of the back cover sensor harness	Check the connection of the back cover sensor harness, and reconnect it if necessary.
2	Back cover sensor attachment failure	Reattach the back cover sensor.
3	Broken rib (on the right inside the back cover) where the back cover switch is pressed	Replace the back cover.
4	Damaged duplex tray	Replace the duplex tray.
5	Back cover sensor failure	Replace the back cover switch harness ASSY.
6	Main PCB failure	Replace the main PCB ASSY.

■ Error codes 1000 to 1D00

These errors do not usually occur during normal use. The possible causes are noise around the installation site, fluctuation of the power supply voltage, and failures in the software.

```
---
```

An unidentified error occurred.

Step	Cause	Remedy
1	Main PCB failure	Replace the main PCB ASSY.

■ Error code 1E00

```
Replace Parts
Drum
```

The number of rotations of the drum unit is reaching the life limit.

Step	Cause	Remedy
1	Replace the drum unit with a new one and reset the drum counter. If the error display is not cleared, the main PCB is faulty.	Replace the main PCB ASSY.

■ Error codes 1F00 to 2300

These errors do not usually occur during normal use. The possible causes are noise around the installation site, fluctuation of the power supply voltage, and failures in the software.

```
---
```

An unidentified error occurred.

Step	Cause	Remedy
1	Main PCB failure	Replace the main PCB ASSY.

■ Error code 2400

```
Print Unable 24
Turn the power off and then back on again.
```

An error occurred in the internal temperature thermistor.

Step	Cause	Remedy
1	Connection failure of the internal temperature thermistor harness	Reconnect the internal temperature thermistor harness.
2	Internal temperature thermistor failure	Replace the Internal temperature thermistor.
3	Main PCB failure	Replace the main PCB ASSY.

■ Error codes 2500 to 3500

These errors do not usually occur during normal use. The possible causes are noise around the installation site, fluctuation of the power supply voltage, and failures in the software.

```
---
```

An unidentified error occurred.

Step	Cause	Remedy
1	Main PCB failure	Replace the main PCB ASSY.

■ Error code 3600

```
Print Unable 36
Turn the power off and then back on again.
```

An error occurred in the high-voltage power supply PCB.

Step	Cause	Remedy
1	High-voltage power supply PCB failure	Replace the high-voltage power supply PCB ASSY.
2	Main PCB failure	Replace the main PCB ASSY.

■ Error codes 3700 to 3A00

These errors do not usually occur during normal use. The possible causes are noise around the installation site, fluctuation of the power supply voltage, and failures in the software.

```
---
```

An unidentified error occurred.

Step	Cause	Remedy
1	Main PCB failure	Replace the main PCB ASSY.

■ Error code 3B00

```
Print Unable 3B
Turn the power off and then back on again.
```

An error occurred during access to the DRAM in the main PCB.

Step	Cause	Remedy
1	Main PCB failure	Replace the main PCB ASSY.

■ Error codes 3C00 to 4300

These errors do not usually occur during normal use. The possible causes are noise around the installation site, fluctuation of the power supply voltage, and failures in the software.

```
---
```

An unidentified error occurred.

Step	Cause	Remedy
1	Main PCB failure	Replace the main PCB ASSY.

■ Error code 4400

```
No Toner
Open the Front Cover, then install the Toner Cartridge.
```

The toner sensor detected that the toner cartridge was not set.

<User Check>

- Set the toner cartridge.

Step	Cause	Remedy
1	Toner sensor PCB failure	Refer to "1.3.10 Check sensor operation (function code: 32)" in Chapter 5 to check the sensor operation. If the sensor operation is faulty, replace the toner sensor PCB ASSY.
2	Relay front PCB failure	Replace the relay front PCB ASSY.
3	Main PCB failure	Replace the main PCB ASSY.

■ Error codes 4500 to 4F00

These errors do not usually occur during normal use. The possible causes are noise around the installation site, fluctuation of the power supply voltage, and failures in the software.

```
---
```

An unidentified error occurred.

Step	Cause	Remedy
1	Main PCB failure	Replace the main PCB ASSY.

■ Error code 5000

```
Replace Parts
Drum
```

The number of rotations of the drum unit has reached the life limit. (Printing does not stop.)

<User Check>

- Prepare the drum unit.

Step	Cause	Remedy
1	Replace the drum unit with a new one and reset the drum counter. If the error display is not cleared, the main PCB is faulty.	Replace the main PCB ASSY.

■ Error code 5100

```
Replace Parts
PF KitMP
```

Printable pages set for the MP paper feeding kit have reached the limit.
(Printing does not stop.)

Error code 5200

```
Replace Parts
PF Kit1
```

Printable pages set for paper feeding kit 1 have reached the limit. (Printing does not stop.)

Error code 5300

```
Replace Parts
PF Kit2
```

Printable pages set for paper feeding kit 2 have reached the limit. (Printing does not stop.)

Step	Cause	Remedy
1	Abrasion of the MP paper feeding kit, paper feeding kit 1 or paper feeding kit 2	Replace the MP paper feeding kit, paper feeding kit 1 or paper feeding kit 2.
2	Main PCB failure	Replace the main PCB ASSY.

■ Error code 5400

```
Replace Parts
Fuser Unit
```

Printable pages set for the fuser unit have reached the limit. (Printing does not stop.)

Step	Cause	Remedy
1	End of life of the fuser unit	Replace the fuser unit.
2	Main PCB failure	Replace the main PCB ASSY.

■ Error code 5500

```
Replace Parts
Laser Unit
```

Printable pages set for the laser unit have reached the limit. (Printing does not stop.)

Step	Cause	Remedy
1	End of life of the laser unit	Replace the laser unit.
2	Main PCB failure	Replace the main PCB ASSY.

■ Error code 5600

```
Cover is Open
Close the Fuser Cover which can be found behind the Back Cover of the machine.
```

The eject sensor detected that the fuser cover was open.

<User Check>

- Close the fuser cover.

Step	Cause	Remedy
1	Eject actuator attachment failure	Reattach the eject actuator.
2	Eject actuator spring attachment failure	Reattach the eject actuator spring.
3	Eject actuator and/or fuser cover failure	Replace the fuser cover.
4	Eject sensor PCB failure	Refer to "1.3.10 Check sensor operation (function code: 32)" in Chapter 5 to check the sensor operation. If the sensor operation is faulty, replace the eject sensor PCB ASSY.
5	Main PCB failure	Replace the main PCB ASSY.

■ Error code 5700

```
Jam Duplex
Pull out the Duplex Tray at the back of the machine and remove the jammed paper.
```

The registration front sensor does not detect paper pass within the specified time after the first side was printed in duplex printing mode.

<User Check>

- Remove the paper jammed in the duplex paper feed system.
- Use A4 or Letter-size paper.
- Check that the thickness of the paper is 60 to 105 g/m^2.

Step	Cause	Remedy
1	Foreign object in the duplex paper feed system	Remove the foreign object.
2	Outer chute coming off	Reattach the outer chute.
3	Connection failure of the duplex solenoid harness	Check the connection of the duplex solenoid harness, and reconnect it if necessary.
4	Duplex gears attachment failure	Reattach the duplex gears.
5	Duplex tray failure	Replace the duplex tray.
6	Duplex solenoid failure	Replace the duplex solenoid.
7	Damaged duplex gears	Replace the main frame L ASSY.
8	Main PCB failure	Replace the main PCB ASSY.

■ Error code 5800

```
Fuser Error
Turn the power off, then on again. Leave the machine for 15 min.
```

Any of error codes 6A00 to 6F00, 7600, 7800, DD00, DE00, or E200 (fuser unit error) occurred when the power switch was turned ON or sleep mode was released.

Error code 5900

```
Self-Diagnostic
Will Automatically Restart within 15 minutes.
```

Rechecking the error after the power switch was turned OFF and then ON again because an error was detected by the center thermistor of the fuser unit.
(This message is displayed for approximately 15 minutes when the machine is restarted after error code 5800 has occurred.)

Step	Cause	Remedy
1	Connection failure of the fuser unit harnesses	Check the connection of fuser unit harnesses, and reconnect them if necessary.
2	Connection failure of the eject sensor PCB harness	Check the connection of the eject sensor PCB harness, and reconnect it if necessary.
3	Fuser unit failure	Replace the fuser unit.
4	Eject sensor PCB failure	Refer to "1.3.10 Check sensor operation (function code: 32)" in Chapter 5 to check the sensor operation. If the sensor operation is faulty, replace the eject sensor PCB ASSY.
5	Low-voltage power supply PCB failure	Replace the low-voltage power supply PCB ASSY.
6	Main PCB failure	Replace the main PCB ASSY.

CAUTION:

- Turn OFF the power switch. After the fuser unit has cooled sufficiently, turn ON the power switch again and leave the machine for ten minutes. This problem may then be cleared.

■ Error codes 5A00 to 6200

These errors do not usually occur during normal use. The possible causes are noise around the installation site, fluctuation of the power supply voltage, and failures in the software.

```
---
```

An unidentified error occurred.

Step	Cause	Remedy
1	Main PCB failure	Replace the main PCB ASSY.

Error code 6300

```
Replace Toner
Open the Front Cover, replace Toner Cartridge.
```

The toner sensor detected no toner remaining or the number of rotations of the developer roller has reached the upper limit.

<User Check>

- Replace the toner cartridge.

Step	Cause	Remedy
1	Toner sensor PCB failure	Refer to "1.3.10 Check sensor operation (function code: 32)" in Chapter 5 to check the sensor operation. If the sensor operation is faulty, replace the toner sensor PCB ASSY.
2	Relay front PCB failure	Replace the relay front PCB ASSY.
3	Main PCB failure	Replace the main PCB ASSY.

Error codes 6400 to 6600

These errors do not usually occur during normal use. The possible causes are noise around the installation site, fluctuation of the power supply voltage, and failures in the software.

```
---
```

An unidentified error occurred.

Step	Cause	Remedy
1	Main PCB failure	Replace the main PCB ASSY.

Error code 6700

```
Toner Low
Prepare New Toner Cartridge.
```

The toner sensor detected that the toner remaining has fallen below the specified level or the developer roller counter has exceeded the specified value.

Step	Cause	Remedy
1	Toner sensor PCB failure	Refer to "1.3.10 Check sensor operation (function code: 32)" in Chapter 5 to check the sensor operation. If the sensor operation is faulty, replace the toner sensor PCB ASSY.
2	Relay front PCB failure	Replace the relay front PCB ASSY.
3	Main PCB failure	Replace the main PCB ASSY.

Error codes 6800 and 6900

These errors do not usually occur during normal use. The possible causes are noise around the installation site, fluctuation of the power supply voltage, and failures in the software.

```
---
```

An unidentified error occurred.

Step	Cause	Remedy
1	Main PCB failure	Replace the main PCB ASSY.

■ Error code 6A00

```
Fuser Error / Print Unable 6A
Turn the power off and then back on again.
```

The center thermistor of the fuser unit has not reached the specified temperature within the specified time.

Error code 6B00

```
Fuser Error / Print Unable 6B
Turn the power off and then back on again.
```

The center thermistor of the fuser unit has not reached the specified temperature within the specified time.

Error code 6C00

```
Fuser Error / Print Unable 6C
Turn the power off and then back on again.
```

The center thermistor of the fuser unit detected a temperature higher than the specified value.

Error code 6D00

```
Fuser Error / Print Unable 6D
Turn the power off and then back on again.
```

After the heat unit was heated normally, the center thermistor of the fuser unit detected a temperature lower than the specified value.

Error code 6E00

```
Fuser Error / Print Unable 6E
Turn the power off and then back on again.
```

The center thermistor of the fuser unit detected that the heat unit was not heated.

Error code 6F00

```
Fuser Error / Print Unable 6F
Turn the power off and then back on again.
```

The center thermistor or the side thermistor of the fuser unit detected a temperature error.

<User Check>

- Turn OFF the power switch. After several seconds, turn ON the power again and check that this error is reset.

Step	Cause	Remedy
1	Connection failure of the center or side thermistor harness of the fuser unit	Check the connection of the center or side thermistor harness of the fuser unit, and reconnect it if necessary.
2	Connection failure of the heater harness of the fuser unit	Check the connection of the heater harness of the fuser unit, and reconnect it if necessary.
3	Connection failure of the eject sensor PCB harness	Check the connection of the eject sensor PCB harness, and reconnect it if necessary.
4	Connection failure of the low-voltage power supply PCB harness	Check the connection of the low-voltage power supply PCB harness, and reconnect it if necessary.
5	Eject sensor PCB failure	Refer to "1.3.10 Check sensor operation (function code: 32)" in Chapter 5 to check the sensor operation. If the sensor operation is faulty, replace the eject sensor PCB ASSY.
6	Fuser unit failure	Replace the fuser unit.
7	Low-voltage power supply PCB failure	Replace the low-voltage power supply PCB ASSY.
8	Main PCB failure	Replace the main PCB ASSY.

■ Error code 7000

This error does not usually occur during normal use. The possible causes are noise around the installation site, fluctuation of the power supply voltage, and failures in the software.

```
---
```

An unidentified error occurred.

Step	Cause	Remedy
1	Main PCB failure	Replace the main PCB ASSY.

■ Error code 7100

```
Print Unable 71
Turn the power off and then back on again.
```

Detected an error in the synchronized signal of the polygon motor for the laser unit.

Error code 7200

```
Print Unable 72
Turn the power off and then back on again.
```

Cannot detect the signal from the beam detecting sensor for the laser unit.

<User Check>

- Turn OFF the power switch. Leave the machine in a well-ventilated location at normal temperature to remove condensation.

Step	Cause	Remedy
1	Connection failure of the laser unit flat cable	Check the connection of the laser unit flat cable, and reconnect it if necessary.
2	Laser unit failure	Replace the laser unit.
3	Main PCB failure	Replace the main PCB ASSY.

■ Error codes 7300 and 7400

These errors do not usually occur during normal use. The possible causes are noise around the installation site, fluctuation of the power supply voltage, and failures in the software.

```
---
```

An unidentified error occurred.

Step	Cause	Remedy
1	Main PCB failure	Replace the main PCB ASSY.

■ Error code 7500

```
Cooling Down
Wait for a while
```

The internal temperature thermistor detected a temperature higher than the specified value. (All fans are activated at full speed until the temperature falls.)

Step	Cause	Remedy
1	Internal temperature thermistor failure	Replace the Internal temperature thermistor.
2	Main PCB failure	Replace the main PCB ASSY.

■ Error code 7600

```
Fuser Error / Print Unable 76
Turn the power off and then back on again.
```

The center thermistor of the fuser unit detected a temperature rise greater than the specified value within the specified time.

Error code 7800

```
Fuser Error / Print Unable 78
Turn the power off and then back on again.
```

The center thermistor of the fuser unit detected a temperature fall greater than the specified value within the specified time.

<User Check>

- Turn OFF the power switch. After several seconds, turn ON the power again and check that this error is reset.

Step	Cause	Remedy
1	Connection failure of the center or side thermistor harness of the fuser unit	Check the connection of the center or side thermistor harness of the fuser unit, and reconnect it if necessary.
2	Connection failure of the heater harness of the fuser unit	Check the connection of the heater harness of the fuser unit, and reconnect it if necessary.
3	Connection failure of the eject sensor PCB harness	Check the connection of the eject sensor PCB harness, and reconnect it if necessary.
4	Connection failure of the low-voltage power supply PCB harness	Check the connection of the low-voltage power supply PCB harness, and reconnect it if necessary.
5	Eject sensor PCB failure	Refer to "1.3.10 Check sensor operation (function code: 32)" in Chapter 5 to check the sensor operation. If the sensor operation is faulty, replace the eject sensor PCB ASSY.
6	Low-voltage power supply PCB failure	Replace the low-voltage power supply PCB ASSY.
7	Main PCB failure	Replace the main PCB ASSY.

■ Error code 7A00

```
Print Unable 7A
Turn the power off and then back on again.
```

Cannot detect the synchronized signal of the main motor. The speed of the main motor does not stabilize within the specified time.

Step	Cause	Remedy
1	Connection failure of the main motor harness	Check the connection of the main motor harness, and reconnect it if necessary.
2	Main motor failure	Replace the main motor ASSY.
3	Main PCB failure	Replace the main PCB ASSY.

Error codes 7B00 and 7C00

These errors do not usually occur during normal use. The possible causes are noise around the installation site, fluctuation of the power supply voltage, and failures in the software.

```
---
```

An unidentified error occurred.

Step	Cause	Remedy
1	Main PCB failure	Replace the main PCB ASSY.

Error code 7D00

```
Drum Error
Open the Front Cover and slide the green tab across the Drum Unit several times.
```

Detected discharge that may be attributable to dirty corona wire on the drum unit.

<User Check>

- Slide the green tag of the drum unit left and right two to three times to clean the corona wire.
- Replace the drum unit with a new one.

Step	Cause	Remedy
1	High-voltage power supply PCB failure	Replace the high-voltage power supply PCB ASSY.
2	Main PCB failure	Replace the main PCB ASSY.

Error codes 7E00 and 7F00

These errors do not usually occur during normal use. The possible causes are noise around the installation site, fluctuation of the power supply voltage, and failures in the software.

```
---
```

An unidentified error occurred.

Step	Cause	Remedy
1	Main PCB failure	Replace the main PCB ASSY.

Error code 8000

```
Size mismatch
Reload correct paper.
```

The registration front sensor detected that the paper length was too short when faxing or printing a list or report.

<User Check>

- Set paper larger than letter size in the tray.

Step	Cause	Remedy
1	Registration front sensor failure	Replace the registration front/rear sensor PCB ASSY.
2	Main PCB failure	Replace the main PCB ASSY.

Error codes 8100 and 8200

These errors do not usually occur during normal use. The possible causes are noise around the installation site, fluctuation of the power supply voltage, and failures in the software.

```
---
```

An unidentified error occurred.

Step	Cause	Remedy
1	Main PCB failure	Replace the main PCB ASSY.

Error code 8300

```
Drum Stop
Replace the Drum Unit. Refer to the instructions in the carton of the new drum.
```

Detected discharge when the number of rotations of the drum has exceeded twice the life limit.

<User Check>

- Replace the drum unit with a new one, and reset the drum counter.

Step	Cause	Remedy
1	High-voltage power supply PCB failure	Replace the high-voltage power supply PCB ASSY.
2	Main PCB failure	Replace the main PCB ASSY.

Error code 8400

```
Jam Rear
Open the Back Cover and remove the jammed paper, then press Start.
```

The eject sensor remains ON (paper pass detected) for more than the specified time even after the registration rear sensor detected the end of paper pass.

<User Check>

- Remove the paper jammed in the rear section of the machine.

Step	Cause	Remedy
1	Foreign object in the rear of the machine	Remove the foreign object.
2	Eject actuator caught in some sections of the machine	Reattach the eject actuator.
3	Eject sensor failure	Refer to "1.3.10 Check sensor operation (function code: 32)" in Chapter 5 to check the sensor operation. If the sensor operation is faulty, replace the eject sensor PCB ASSY.
4	Main PCB failure	Replace the main PCB ASSY.

CAUTION:

- Do not use a sharp tool such as tweezers or screwdriver to remove the jammed paper.

Error code 8500

```
No Tray
The paper tray cannot be detected, re-install #T1.
```

The T1 paper feed sensor detected that paper tray 1 was not set.

<User Check>

- Set paper tray 1 correctly.

Step	Cause	Remedy
1	T1 paper feed actuator caught in some sections of the machine	Reattach the T1 paper feed actuator.
2	T1 paper feed sensor PCB failure	Refer to "1.3.10 Check sensor operation (function code: 32)" in Chapter 5 to check the sensor operation. If the sensor operation is faulty, replace the T1 paper feed sensor PCB ASSY.
3	High-voltage power supply PCB failure	Replace the high-voltage power supply PCB ASSY.
4	Main PCB failure	Replace the main PCB ASSY.

Error codes 8600 and 8700

These errors do not usually occur during normal use. The possible causes are noise around the installation site, fluctuation of the power supply voltage, and failures in the software.

```
---
```

An unidentified error occurred.

Step	Cause	Remedy
1	Main PCB failure	Replace the main PCB ASSY.

Error code 8800

```
Jam Inside
Open the Front Cover, pull out the Drum Unit completely and remove the jammed paper.
```

The eject sensor does not detect paper pass after the registration rear sensor detected the end of paper pass.

<User Check>

- Remove the paper jammed inside the machine.

Step	Cause	Remedy
1	Foreign object inside the machine	Remove the foreign object.
2	Eject actuator caught in some sections of the machine	Reattach the eject actuator.
3	Eject sensor failure	Refer to "1.3.10 Check sensor operation (function code: 32)" in Chapter 5 to check the sensor operation. If the sensor operation is faulty, replace the eject sensor PCB ASSY.
4	Main PCB failure	Replace the main PCB ASSY.

■ Error code 8900

```
Size Error DX
Specify the correct paper.
```

The registration front sensor detected that the paper fed was smaller than or larger than the specified size in duplex printing mode.

<User Check>

- Use A4 or Letter-size paper.

Step	Cause	Remedy
1	Registration front actuator caught in some sections of the machine	Reattach the registration front actuator.
2	Registration front sensor failure	Refer to "1.3.10 Check sensor operation (function code: 32)" in Chapter 5 to check the sensor operation. If the sensor operation is faulty, replace the registration front/rear sensor PCB ASSY.
3	Main PCB failure	Replace the main PCB ASSY.

■ Error code 8A00

```
Jam Tray 1
Remove the jammed paper from Tray 1.
```

The registration front sensor does not detect paper pass within the specified time after the T1 paper feed sensor detected paper pass.

Error code 8B00

```
Jam Tray 2
Remove the jammed paper from Tray 2.
```

The registration front sensor does not detect paper pass within the specified time after the T2 paper feed sensor detected paper pass.

<User Check>

- Remove the paper jammed in the front section of the machine.
- Adjust the paper guide according to the paper size.
- Check that the thickness of the paper is 60 to 105 g/m^2.
- Check that there is not too much paper set in the tray.

Step	Cause	Remedy
1	Foreign object in the front of the machine	Remove the foreign object.
2	Registration front actuator caught in some sections of the machine	Reattach the registration front actuator.
3	Connection failure of the registration front/rear sensor harness	Check the connection of the registration front/rear sensor harness, and reconnect it if necessary.
4	Registration front sensor failure	Refer to "1.3.10 Check sensor operation (function code: 32)" in Chapter 5 to check the sensor operation. If the sensor operation is faulty, replace the registration front/rear sensor PCB ASSY.
5	Main PCB failure	Replace the main PCB ASSY.

■ Error code 8C00

```
Jam MP Tray
Remove the jammed paper from Multi Purpose Tray and press Start.
```

The registration front sensor does not detect paper pass within the specified time after the paper was picked up from the MP tray.

<User Check>

- Remove the paper jammed in the MP tray.

Step	Cause	Remedy
1	Foreign object in the MP tray	Remove the foreign object.
2	Registration front actuator caught in some sections of the machine	Reattach the registration front actuator.
3	Connection failure of the registration front/rear sensor harness	Check the connection of the registration front/rear sensor PCB harness, and reconnect it if necessary.
4	Abrasion of the MP paper pick-up roller	Replace the MP paper feeding kit.
5	Registration front sensor failure	Refer to "1.3.10 Check sensor operation (function code: 32)" in Chapter 5 to check the sensor operation. If the sensor operation is faulty, replace the registration front/rear sensor PCB ASSY.
6	Main PCB failure	Replace the main PCB ASSY.

■ Error code 8D00

```
Cover is Open
Make sure there is no paper jammed inside the machine and close the Back Cover,
then press Start.
```

When the power switch was turned ON, the eject sensor detected paper pass or detected that the fuser cover was open.

<User Check>

- Close the fuser cover.
- Remove the paper jammed in the fuser cover.

Step	Cause	Remedy
1	Eject actuator caught in some sections of the machine	Reattach the eject actuator.
2	Eject actuator failure	Replace the fuser cover.
3	Eject sensor failure	Refer to "1.3.10 Check sensor operation (function code: 32)" in Chapter 5 to check the sensor operation. If the sensor operation is faulty, replace the eject sensor PCB ASSY.
4	Main PCB failure	Replace the main PCB ASSY.

■ Error codes 8E00 and 8F00

These errors do not usually occur during normal use. The possible causes are noise around the installation site, fluctuation of the power supply voltage, and failures in the software.

```
---
```

An unidentified error occurred.

Step	Cause	Remedy
1	Main PCB failure	Replace the main PCB ASSY.

■ Error code 8F01

```
Size mismatch
Reload correct paper in #T.
```

When copying from the MP tray, the size of paper set in the MP tray does not match the size specified by the driver.

Error code 8F02

```
Size mismatch
Reload correct paper in #T.
```

When copying from the Paper tray 1, the size of paper set in the Paper tray 1 does not match the size specified by the driver.

Error code 8F03

```
Size mismatch
Reload correct paper in #T.
```

When copying from the Paper tray 2, the size of paper set in the Paper tray 2 does not match the size specified by the driver.

■ Error code 9000

```
Size mismatch
Load #S paper in #T and press Start.
```

When printing from the MP tray, the size of paper set in the MP tray does not match the size specified by the driver.

Error code 9100

```
Size mismatch
Load #S paper in #T and press Start.
```

When printing from paper tray 1, the size of paper set in paper tray 1 does not match the size specified by the driver.

Error code 9200

```
Size mismatch
Load #S paper in #T and press Start.
```

When printing from paper tray 2, the size of paper set in paper tray 2 does not match the size specified by the driver.

<User Check>

- Match the size of the paper set in each tray to the driver instruction, or match the driver instruction to the size of the paper set in each tray.

Step	Cause	Remedy
1	Registration rear actuator caught in some sections of the machine	Reattach the registration rear actuator.
2	Registration rear sensor failure	Replace the registration front/rear sensor PCB ASSY.
3	Main PCB failure	Replace the main PCB ASSY.

■ Error code 9300

```
No Paper
Load #S paper in MP Tray.
```

When printing from the MP tray, the MP paper empty sensor detected that there was no paper set in the MP tray.

<User Check>

- Set the paper in the MP tray.

Step	Cause	Remedy
1	MP paper empty actuator 1 or 2 caught in some sections of the machine	Reattach the MP paper empty actuator 1 or 2.
2	MP paper empty actuator 1 or 2 failure	Replace the MP paper empty actuator 1 or 2.
3	MP paper empty sensor failure	Refer to "1.3.10 Check sensor operation (function code: 32)" in Chapter 5 to check the sensor operation. If the sensor operation is faulty, replace the MP paper empty sensor PCB ASSY.
4	High-voltage power supply PCB failure	Replace the high-voltage power supply PCB ASSY.
5	Main PCB failure	Replace the main PCB ASSY.

■ Error code 9400

```
No Paper
Load #S paper in #T1.
```

When printing from paper tray 1, the T1 paper feed sensor detected that there was no paper set in paper tray 1.

<User Check>

- Set the paper in paper tray 1.

Step	Cause	Remedy
1	Connection failure of the T1 paper feed sensor harness	Check the connection of the T1 paper feed sensor PCB harness, and reconnect it if necessary.
2	T1 paper feed actuator caught in some sections of the machine	Reattach the T1 paper feed actuator.
3	T1 paper feed actuator failure	Replace the T1 paper feed actuator.
4	T1 paper feed sensor failure	Refer to "1.3.10 Check sensor operation (function code: 32)" in Chapter 5 to check the sensor operation. If the sensor operation is faulty, replace the T1 paper feed sensor PCB ASSY.
5	High-voltage power supply PCB failure	Replace the high-voltage power supply PCB ASSY.
6	Main PCB failure	Replace the main PCB ASSY.

■ Error code 9500

```
No Paper
Load #S paper in #T2.
```

When printing from paper tray 2, the T2 paper feed sensor detected that there was no paper set in paper tray 2.

<User Check>

- Set the paper in paper tray 2.

Step	Cause	Remedy
1	Connection failure of the T2 paper feed sensor harness	Check the connection of the T2 paper feed sensor harness, and reconnect it if necessary.
2	T2 paper feed actuator caught in some sections of the machine	Reattach the T2 paper feed actuator.
3	T2 paper feed actuator failure	Replace the T2 paper feed actuator.
4	T2 paper feed sensor failure	Refer to "1.3.10 Check sensor operation (function code: 32)" in Chapter 5 to check the sensor operation. If the sensor operation is faulty, replace the T2 paper feed sensor PCB ASSY.
5	T2 relay PCB failure	Replace the T2 relay PCB ASSY.
6	LT connector failure	Replace the LT connector
7	Main PCB failure	Replace the main PCB ASSY.

■ Error code 9600

```
(Non Touch panel model)
No Paper
Load #S paper in #T.
```

```
(Touch panel model)
No Paper
Load paper in Tray
```

When printing with the tray designation set to AUTO, the MP paper empty sensor, T1 paper feed sensor and T2 paper feed sensor all detected that there was no paper set in the MP tray, paper tray 1 and paper tray 2.

<User Check>

- Set the paper in any tray.

Step	Cause	Remedy
1	Main PCB failure	Replace the main PCB ASSY.

■ Error code 9700

```
Size Error
Specify the correct paper size for Tray 1.
```

When printing from paper tray 1, a paper size not supported for paper tray 1 was specified from the driver.

<User Check>

- Set the Printer Driver's paper setting to a paper size supported for paper tray 1.

Step	Cause	Remedy
1	Main PCB failure	Replace the main PCB ASSY.

■ Error code 9800

```
Size Error
Specify the correct paper size for Tray 2.
```

When printing from paper tray 2, a paper size not supported for paper tray 2 was specified from the driver.

<User Check>

- Set the Printer Driver's paper setting to a paper size supported for paper tray 2.

Step	Cause	Remedy
1	Main PCB failure	Replace the main PCB ASSY.

■ Error code 9900

```
Size Error DX
Press Stop Key. Specify the correct paper and load the same size paper as the
Printer driver setting.
```

Printing on a paper size not supported for duplex printing was attempted from the driver.

<User Check>

- Set A4 or Letter-size paper in the tray specified by the driver.

Step	Cause	Remedy
1	Main PCB failure	Replace the main PCB ASSY.

Error code 9A00

```
Manual Feed
Load paper
```

There is no paper set in the MP tray while feeding from the Manual is fixed.

Step	Cause	Remedy
1	MP paper empty actuator 1 or 2 caught in some sections of the machine	Reattach the MP paper empty actuator 1 or 2.
2	Failure of MP paper empty actuator 1 or 2	Replace the MP paper empty actuator 1 or 2.
3	MP paper empty sensor failure	Refer to "1.3.10 Check sensor operation (function code: 32)" in Chapter 5 to check the sensor operation. If the sensor operation is faulty, replace the MP paper empty sensor PCB ASSY.
4	High-voltage power supply PCB failure	Replace the high-voltage power supply PCB ASSY.
5	Main PCB failure	Replace the main PCB ASSY.

Error codes 9B00 to 9F00

These errors do not usually occur during normal use. The possible causes are noise around the installation site, fluctuation of the power supply voltage, and failures in the software.

```
---
```

An unidentified error occurred.

Step	Cause	Remedy
1	Main PCB failure	Replace the main PCB ASSY.

Error code 9F01

```
---
```

The T1 paper feed sensor detected that paper has run out during faxing or printing a list or report.

<User Check>

- Set the paper in any tray.

Step	Cause	Remedy
1	High-voltage power supply PCB failure	Replace the high-voltage power supply PCB ASSY.
2	T1 paper feed sensor failure	Replace the T1 paper feed sensor PCB ASSY.
3	Main PCB failure	Replace the main PCB ASSY.

■ Error code A000

```
Scan Unable
Remove the original document. Turn the power off, then on again.
```

Image processing cannot be completed correctly because the number of pixels required for image processing is insufficient in the scanned data for the second side of the document.

Step	Cause	Remedy
1	Incorrect correction data for second side CIS	Execute function code 55.
2	Second side CIS unit failure	Replace the second side CIS unit.
3	Main PCB failure	Replace the main PCB ASSY.

■ Error code A100

```
Cover is Open
Close the Front Cover.
```

The front cover sensor detected that the front cover was open.

<User Check>

- Close the front cover.

Step	Cause	Remedy
1	Connection failure of the front cover sensor harness	Check the connection of the front cover sensor harness, and reconnect it if necessary.
2	Connection failure of the relay front harness	Check the connection of the relay front harness, and reconnect it if necessary.
3	Front cover sensor attachment failure	Reattach the front cover sensor.
4	Broken rib (inside the front cover) where the front cover sensor is pressed	Replace the front cover.
5	Front cover sensor failure	Refer to "1.3.10 Check sensor operation (function code: 32)" in Chapter 5 to check the sensor operation. If the sensor operation is faulty, replace the relay front PCB ASSY.
6	Relay front PCB failure	Replace the relay front PCB ASSY.
7	Main PCB failure	Replace the main PCB ASSY.

■ Error code A200

```
Document Jam
Clear the scanner jam, then press the Stop Key.
```

The first side document scanning position sensor detected that the document length was 90 cm or more while scanning the document.

<User Check>

- Set the document length within the standard.

Step	Cause	Remedy
1	First side document scanning position actuator caught in some sections of the machine	Reattach the first side document scanning position actuator.
2	First side document scanning position sensor failure	Replace the first side document scanning position sensor PCB ASSY.
3	Main PCB failure	Replace the main PCB ASSY.

■ Error code A300

```
Document Jam
Clear the scanner jam, then press the Stop Key.
```

The first side document scanning position sensor has not detected the top of the document even after the document has been fed for the specified distance.

<User Check>

- Set the document in the ADF correctly.

Step	Cause	Remedy
1	First side document scanning position actuator coming off	Reattach the first side document scanning position actuator.
2	Connection failure of the first side document scanning position sensor harness	Reconnect the first side document scanning position sensor harness.
3	First side document scanning position sensor failure	Replace the first side document scanning position sensor PCB ASSY.
4	Main PCB failure	Replace the main PCB ASSY.

■ Error code A400

```
Cover is Open
Close the ADF Cover.
```

The ADF cover sensor detected that the ADF cover was open.

<User Check>

- Close the ADF cover.

Step	Cause	Remedy
1	Connection failure of the ADF sensor PCB harness	Reconnect the ADF sensor PCB harness.
2	Tab to push the ADF cover sensor is broken.	Replace the ADF cover.
3	ADF sensor failure	Replace the ADF cover/document detection sensor PCB ASSY.
4	Main PCB failure	Replace the main PCB ASSY.

■ Error code A500

```
Scan Unable
Remove the original document. Turn the power off, then on again.
```

When scanning the fax, white or black correction data for the first side CIS was not within the correct range.

Error code A600

```
Scan Unable A6
See Troubleshooting and routine maintenance chapter in User's Guide.
```

Although operation was retried due to error A500 that occurred while scanning the fax, white or black correction data for the first side CIS was not within the correct range.

Step	Cause	Remedy
1	Incorrect correction data for first side CIS	Execute function code 55.
2	First side CIS unit failure	Replace the first side CIS unit.
3	Main PCB failure	Replace the main PCB ASSY.

Error code A700

```
Print Unable A7
Turn the power off and then back on again.
```

Color parameter in the ROM does not match the first side CIS.

Step	Cause	Remedy
1	First side CIS unit or second side CIS unit failure	Replace the first side CIS unit or second side CIS unit.
2	Main PCB failure	Replace the main PCB ASSY.

Error code A800

```
Scan Unable
See Troubleshooting and routine maintenance chapter in User's Guide.
```

An error was detected in the color parameter in the ROM during image processing.

Step	Cause	Remedy
1	Malfunction of the program	Install the latest firmware.
2	Main PCB failure	Replace the main PCB ASSY.

Error code A900

```
Scan Unable A9
—
```

A scanning error occurred while scanning the image.

Step	Cause	Remedy
1	Malfunction of the program	Install the latest firmware.
2	First side CIS unit or second side CIS unit failure	Replace the first side CIS unit or second side CIS unit.
3	Main PCB failure	Replace the main PCB ASSY.

Error codes AA00 and AB00

These errors do not usually occur during normal use. The possible causes are noise around the installation site, fluctuation of the power supply voltage, and failures in the software.

```
---
```

An unidentified error occurred.

Step	Cause	Remedy
1	Main PCB failure	Replace the main PCB ASSY.

Error code AC00

```
Scan Unable
Remove the original document. Turn the power off, then on again.
```

When scanning the fax, white or black correction data for the second side CIS was not within the correct range.

<User Check>

- Clean the second side document hold.

Step	Cause	Remedy
1	Second side CIS unit failure	Replace the second side CIS unit.
2	Main PCB failure	Replace the main PCB ASSY.

Error code AD00

```
Scan Unable
Remove the original document. Turn the power off, then on again.
```

Image processing cannot be completed correctly because the number of pixels required for image processing is insufficient in the scanned data for the front side of the document.

Step	Cause	Remedy
1	Incorrect correction data for first side CIS	Execute function code 55.
2	First side CIS unit failure	Replace the first side CIS unit.
3	Main PCB failure	Replace the main PCB ASSY.

Error code AE00

This error does not usually occur during normal use. The possible causes are noise around the installation site, fluctuation of the power supply voltage, and failures in the software.

```
---
```

An unidentified error occurred.

Step	Cause	Remedy
1	Main PCB failure	Replace the main PCB ASSY.

Error code AF00

```
Scan Unable AF
See Troubleshooting and routine maintenance chapter in User's Guide.
```

Home position is still being detected even after the first side CIS for the document scanner unit was moved.

Step	Cause	Remedy
1	CIS drive belt coming off	Reattach the CIS drive belt.
2	First side CIS unit failure	Replace the first side CIS unit.
3	Document scanner motor failure	Replace the document scanner unit.
4	Main PCB failure	Replace the main PCB ASSY.

■ Error code B000

```
SCANNER ERROR FB / SCANNER ERROR ADF
—
```

Detected that the first side CIS flat cable or second side CIS flat cable was not inserted correctly.

Step	Cause	Remedy
1	Connection failure of the first side CIS flat cable or second side CIS flat cable	Reconnect the first side CIS flat cable or second side CIS flat cable.
2	First side CIS unit or second side CIS unit failure	Replace the first side CIS unit or second side CIS unit.
3	Main PCB failure	Replace the main PCB ASSY.

■ Error codes B100 to B600

These errors do not usually occur during normal use. The possible causes are noise around the installation site, fluctuation of the power supply voltage, and failures in the software.

```
---
```

An unidentified error occurred.

Step	Cause	Remedy
1	Main PCB failure	Replace the main PCB ASSY.

■ Error code B700

```
Scanner Error
—
```

The voltage value was above the upper limit during scanning.

Error code B800

```
Scanner Error
—
```

The voltage value was below the lower limit during scanning.

Error code B900

```
Scanner Error
—
```

The white level does not increase during scanning although the light intensity was increased.

Step	Cause	Remedy
1	First side CIS unit or second side CIS unit failure	Replace the first side CIS unit or second side CIS unit.
2	Main PCB failure	Replace the main PCB ASSY.

■ Error code BA00

This error does not usually occur during normal use. The possible causes are noise around the installation site, fluctuation of the power supply voltage, and failures in the software.

```
---
```

An unidentified error occurred.

Step	Cause	Remedy
1	Main PCB failure	Replace the main PCB ASSY.

■ Error code BB00

```
Scanner Error
—
```

A white level not within the standard was scanned when function code 55 was executed.

Step	Cause	Remedy
1	First side CIS unit or second side CIS unit failure	Replace the first side CIS unit or second side CIS unit.
2	Main PCB failure	Replace the main PCB ASSY.

■ Error code BC00

```
Scan Unable BC
See Troubleshooting and routine maintenance chapter in User's Guide.
```

Although operation was retried due to error AC00 that occurred while scanning the fax, white or black correction data for the second side CIS was not within the correct range.

Step	Cause	Remedy
1	Incorrect correction data for second side CIS	Execute function code 55.
2	Second side CIS unit failure	Replace the second side CIS unit.
3	Main PCB failure	Replace the main PCB ASSY.

■ Error code BD00

```
Scanner Error
—
```

A black level not within the standard was scanned when function code 55 was executed.

Step	Cause	Remedy
1	First side CIS unit or second side CIS unit failure	Replace the first side CIS unit or second side CIS unit.
2	Main PCB failure	Replace the main PCB ASSY.

Error code BE00

This error does not usually occur during normal use. The possible causes are noise around the installation site, fluctuation of the power supply voltage, and failures in the software.

```
---
```

An unidentified error occurred.

Step	Cause	Remedy
1	Main PCB failure	Replace the main PCB ASSY.

Error code BF00

```
Scan Unable
Document is too long for duplex scanning. Press Stop key.
```

The second side document scanning position sensor detected that the ADF was unable to duplex-feed the document because the document is too long.

<User Check>

- Change the paper size to A4 or letter size.

Step	Cause	Remedy
1	Second side document scanning position actuator caught in some sections of the machine	Reattach the second side document scanning position actuator.
2	Second side document scanning position sensor failure	Replace the second side document scanning position sensor PCB ASSY.
3	Main PCB failure	Replace the main PCB ASSY.

Error code C000

```
Cartridge Error
Put the Toner Cartridge back in.
```

The new toner sensor could not detect the new toner cartridge correctly.

<User Check>

- Set the toner cartridge to the machine correctly.

Step	Cause	Remedy
1	The power switch was turned OFF or the front cover was opened while a new toner cartridge is being detected.	Reset the developer roller counter. (Refer to "2.3 Reset Developer Roller Counter" in Chapter 5.)

■ Error codes C100 to C600

These errors do not usually occur during normal use. The possible causes are noise around the installation site, fluctuation of the power supply voltage, and failures in the software.

```
---
```

An unidentified error occurred.

Step	Cause	Remedy
1	Main PCB failure	Replace the main PCB ASSY.

■ Error code C700

```
Out of Memory
Press Stop Key
```

There is insufficient memory to expand PC-print data.

<User Check>

- Print the print data stored in the memory.
- Expand DIMM.

Error code C800

```
Out of Memory
Secure Print Data is full. Press Stop Key and delete the previously stored data.
```

The memory size allotted for Secure Print was exceeded when saving Secure Print data.

<User Check>

- Print the print data stored in the memory.
- Expand DIMM.

Step	Cause	Remedy
1	Main PCB failure	Replace the main PCB ASSY.

Error code CA00

```
Unusable Device
Remove the Device. Turn the power off and back on again.
```

A USB device not within the specifications is connected to the USB terminal, resulting in overcurrent.

<User Check>

- Remove the USB device that is not within the specifications.

Step	Cause	Remedy
1	Main PCB failure	Replace the main PCB ASSY.

Error codes CB00 to CF00

These errors do not usually occur during normal use. The possible causes are noise around the installation site, fluctuation of the power supply voltage, and failures in the software.

```
---
```

An unidentified error occurred.

Step	Cause	Remedy
1	Main PCB failure	Replace the main PCB ASSY.

Error code D000

```
---
```

An error occurred while initializing the touch panel.

Step	Cause	Remedy
1	Connection failure of the touch panel PCB harness	Reconnect the touch panel PCB harness.
2	Touch panel PCB failure	Replace the touch panel PCB ASSY.
3	Main PCB failure	Replace the main PCB ASSY.

Error code D100

```
Print Unable D1
See Troubleshooting and routine maintenance chapter in User's Guide.
```

An error occurred while initializing the modem.

Step	Cause	Remedy
1	Main PCB failure	Replace the main PCB ASSY.

Error codes D200 to DC00

These errors do not usually occur during normal use. The possible causes are noise around the installation site, fluctuation of the power supply voltage, and failures in the software.

```
---
```

An unidentified error occurred.

Step	Cause	Remedy
1	Main PCB failure	Replace the main PCB ASSY.

■ Error code DD00

```
Print Unable DD
Turn the power off and then back on again.
```

Fuser unit error (except error codes 6A00 to 6F00, 7600, 7800, DE00, and E200)

<User Check>

- Turn OFF the power switch. After several seconds, turn ON the power again and check that this error is reset.

Step	Cause	Remedy
1	Connection failure of the center or side thermistor harness of the fuser unit	Check the connection of the center or side thermistor harness of the fuser unit, and reconnect it if necessary.
2	Connection failure of the heater harness of the fuser unit	Check the connection of the heater harness of the fuser unit, and reconnect it if necessary.
3	Connection failure of the eject sensor PCB harness	Check the connection of the eject sensor PCB harness, and reconnect it if necessary.
4	Connection failure of the low-voltage power supply PCB harness	Check the connection of the low-voltage power supply PCB harness, and reconnect it if necessary.
5	Eject sensor PCB failure	Refer to "1.3.10 Check sensor operation (function code: 32)" in Chapter 5 to check the sensor operation. If the sensor operation is faulty, replace the eject sensor PCB ASSY.
6	Low-voltage power supply PCB failure	Replace the low-voltage power supply PCB ASSY.
7	Fuser unit failure	Replace the fuser unit.
8	Main PCB failure	Replace the main PCB ASSY.

■ Error code DE00

```
Print Unable DE
Turn the power off and then back on again.
```

When the center thermistor of the fuser unit is higher than the idle temperature, the side thermistor detected a temperature lower than the specified temperature.

<User Check>

- Turn OFF the power switch. After several seconds, turn ON the power again and check that this error is reset.

Step	Cause	Remedy
1	Connection failure of the side thermistor harness of the fuser unit	Check the connection of the side thermistor harness of the fuser unit, and reconnect it if necessary.
2	Connection failure of the eject sensor PCB harness	Check the connection of the eject sensor PCB harness, and reconnect it if necessary.
3	Eject sensor PCB failure	Refer to "1.3.10 Check sensor operation (function code: 32)" in Chapter 5 to check the sensor operation. If the sensor operation is faulty, replace the eject sensor PCB ASSY.
4	Fuser unit failure	Replace the fuser unit.
5	Main PCB failure	Replace the main PCB ASSY.

■ Error code DF00

This error does not usually occur during normal use. The possible causes are noise around the installation site, fluctuation of the power supply voltage, and failures in the software.

```
---
```

An unidentified error occurred.

Step	Cause	Remedy
1	Main PCB failure	Replace the main PCB ASSY.

■ Error code E000

```
Print Unable E0
Turn the power off and then back on again.
```

An error occurred in the ROM check sum.

Step	Cause	Remedy
1	Main PCB failure	Replace the main PCB ASSY.

■ Error code E100

```
Print Unable E1
Turn the power off and then back on again.
```

Program error

Step	Cause	Remedy
1	Firmware install failure	Install the latest firmware.
2	Main PCB failure	Replace the main PCB ASSY.

■ Error code E200

```
Print Unable E2
Turn the power off and then back on again.
```

When the center thermistor of the fuser unit is higher than the idle temperature, the side thermistor detected a temperature higher than the specified temperature.

<User Check>

- Turn OFF the power switch. After several seconds, turn ON the power again and check that this error is reset.

Step	Cause	Remedy
1	Connection failure of the side thermistor harness of the fuser unit	Check the connection of the side thermistor harness of the fuser unit, and reconnect it if necessary.
2	Connection failure of the eject sensor PCB harness	Check the connection of the eject sensor PCB harness, and reconnect it if necessary.
3	Eject sensor PCB failure	Refer to "1.3.10 Check sensor operation (function code: 32)" in Chapter 5 to check the sensor operation. If the sensor operation is faulty, replace the eject sensor PCB ASSY.
4	Fuser unit failure	Replace the fuser unit.
5	Main PCB failure	Replace the main PCB ASSY.

■ Error codes E300 and E400

These errors do not usually occur during normal use. The possible causes are noise around the installation site, fluctuation of the power supply voltage, and failures in the software.

```
---
```

An unidentified error occurred.

Step	Cause	Remedy
1	Main PCB failure	Replace the main PCB ASSY.

■ Error code E600

```
Print Unable E6
Turn the power off and then back on again.
```

Write error in the EEPROM of the main PCB

Step	Cause	Remedy
1	Main PCB failure	Replace the main PCB ASSY.

■ Error codes E700 to EB00

These errors do not usually occur during normal use. The possible causes are noise around the installation site, fluctuation of the power supply voltage, and failures in the software.

```
---
```

An unidentified error occurred.

Step	Cause	Remedy
1	Main PCB failure	Replace the main PCB ASSY.

■ Error code EC00

```
Print Unable EC
Turn the power off and then back on again.
```

Detected a main fan failure.

Step	Cause	Remedy
1	Connection failure of the main fan harness	Check the connection of the main fan harness, and reconnect it if necessary.
2	Connection failure of the toner LED PCB harness	Check the connection of the toner LED PCB harness, and reconnect it if necessary.
3	Main fan failure	Replace the main fan.
4	Toner LED PCB failure	Refer to "1.3.10 Check sensor operation (function code: 32)" in Chapter 5 to check the sensor operation. If the sensor operation is faulty, replace the toner LED PCB ASSY.
5	Main PCB failure	Replace the main PCB ASSY.

■ Error code ED00

```
Print Unable ED
Turn the power off and then back on again.
```

Communication between the wireless LAN PCB and the main PCB cannot be established at machine startup.

Step	Cause	Remedy
1	Connection failure of the wireless LAN PCB harness	Check the connection of the wireless LAN PCB harness, and reconnect it if necessary.
2	Wireless LAN PCB failure	Replace the wireless LAN PCB.
3	Main PCB failure	Replace the main PCB ASSY.

■ Error code EE00

```
Print Unable EE
Turn the power off and then back on again.
```

Detected communication failure after communication between the wireless LAN PCB and the main PCB was established.

Step	Cause	Remedy
1	Wireless LAN PCB failure	Replace the wireless LAN PCB.
2	Main PCB failure	Replace the main PCB ASSY.

■ Error code EF00

```
Print Unable EF
Turn the power off and then back on again.
```

The supplied power is unstable.

<User Check>

- Turn OFF the power switch. After several seconds, turn ON the power again and check that this error is reset.

Step	Cause	Remedy
1	Low-voltage power supply PCB failure	Replace the low-voltage power supply PCB ASSY, and then reset the irregular power supply detection counter.
2	Main PCB failure	Replace the main PCB ASSY.

CAUTION:

- The irregular power supply detection error (error code EF00) occurs when there is a large distortion in the power supply voltage supplied to the machine. In this case, if the same power supply is used, the same error may occur even when the low-voltage power supply PCB ASSY is replaced. Ask the user to review the installation environment.

■ Error code F000

```
Print Unable F0
Turn the power off and then back on again.
```

Malfunction of the flash memory on the main PCB

<User Check>

- Turn OFF the power switch. After several seconds, turn ON the power again and check that this error is reset.

Step	Cause	Remedy
1	Main PCB failure	Replace the main PCB ASSY.

■ Error codes F100 to F800

These errors do not usually occur during normal use. The possible causes are noise around the installation site, fluctuation of the power supply voltage, and failures in the software.

```
---
```

An unidentified error occurred.

Step	Cause	Remedy
1	Main PCB failure	Replace the main PCB ASSY.

■ Error code F900

```
Machine Error F9
—
```

The country code was not entered correctly.

Step	Cause	Remedy
1	Power switch was turned OFF while "PARAMETER INIT" is displayed during execution of function code 74.	Reenter the country code. (Refer to "1.3.23 Setting by country (function code: 74)" in Chapter 5.)

■ Error codes FA00 to FF00

These errors do not usually occur during normal use. The possible causes are noise around the installation site, fluctuation of the power supply voltage, and failures in the software.

```
---
```

An unidentified error occurred.

Step	Cause	Remedy
1	Main PCB failure	Replace the main PCB ASSY.

4.2 Troubleshooting for Paper Feeding Problems

End users can solve problems related to paper feeding as long as they follow the User Check items. If the problem still cannot be solved, implement each procedure according to the step number in the tables below.

4.2.1 No paper is fed from each paper tray

<User Check>

- Check that the paper is set in the paper tray correctly.
- Check that there is not too much paper set in the paper tray.
- Flip over the paper in the paper tray or rotate the paper 180°.
- Check that the thickness of the paper is 60 to 105 g/m^2.
- Check that the manual feed slot is not set as the pick-up tray.
- Flip through the paper and reset it in the paper tray.
- Clean the pick-up roller.

Step	Cause	Remedy
1	Accumulated paper dust in the T1 or T2	Remove the T1 or T2 paper dust cleaning roller cover and get rid of the paper dust in the area described in the figure below.
2	Attachment failure of the T1 or T2 roller holder ASSY	Reattach the T1 or T2 roller holder ASSY correctly.
3	Connection failure of the main motor flat cable	Reconnect the main motor flat cable.
4	Connection failure of the T1 or T2 paper feed sensor harness	Reconnect the T1 or T2 paper feed sensor harness ASSY.
5	T1 or T2 paper feed actuator coming off	Reattach the T1 or T2 paper feed actuator.
6	Connection failure of the new toner sensor PCB flat cable	Reconnect the new toner sensor PCB flat cable.
7	Connection failure of the T1 clutch harness	Reconnect the T1 clutch harness.
8	Abrasion of the pick-up roller	Replace the T1 or T2 PF kit.
9	Damaged LT drive gear	Replace the LT drive gear.
10	T1 or T2 clutch failure	Replace the T1 or T2 clutch.
11	Damaged P/P gear	Replace each paper tray.
12	Main motor failure	Replace the main motor.
13	Relay front PCB failure	Replace the relay front PCB ASSY.
14	Damaged gears in the paper feeding system	Replace the main frame L ASSY.
15	Damaged fuser unit	Replace the fuser unit.
16	Main PCB failure	Replace the main PCB ASSY.

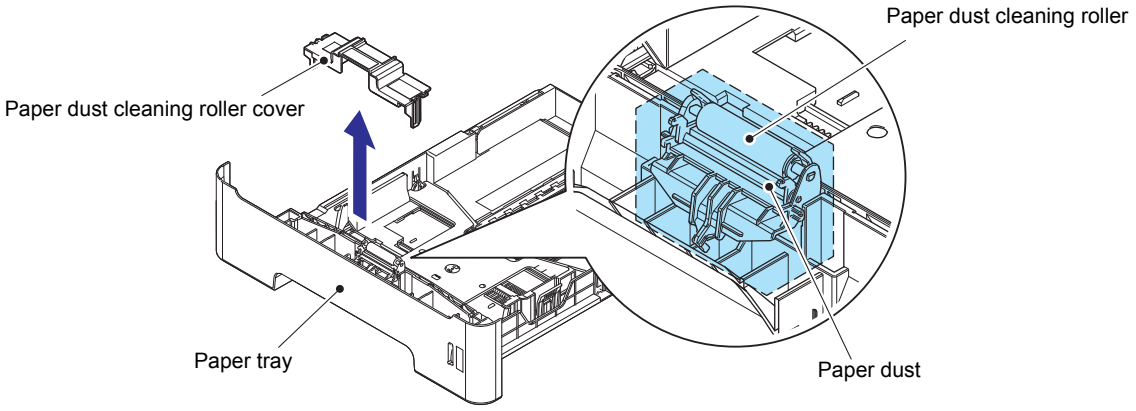

Fig. 2-9

4.2.2 Multiple sheets of paper are fed

<User Check>

- Check that the paper is set in each paper tray correctly.
- Check that there is not too much paper set in each tray.
- Reverse the paper in each paper tray or rotate the paper 180°.
- Check that the thickness of the paper is 60 to 105 g/m^2. (60 to 163 g/m^2 for MP tray)
- Flip through the paper and reset it in the tray.

Step	Cause	Remedy
1	Abrasion of the separation pad or separation roller	Replace the paper feeding kit for the corresponding paper tray.

4.2.3 Paper becomes wrinkled

<User Check>

- Check that the paper is set in each paper tray correctly.
- Reverse the paper in each paper tray or rotate the paper 180°.
- Adjust the paper guide according to the paper size.
- Check that the thickness of the paper is 60 to 105 g/m^2. (60 to 163 g/m^2 for MP tray)
- Check that the paper is not damp.
- Check that there is no dust stuck to the fuser unit.

Step	Cause	Remedy
1	Fuser unit failure	Replace the fuser unit.

4.2.4 Paper is fed at an angle

<User Check>

- Check that the paper is set in each paper tray correctly.
- Adjust the paper guide according to the paper size.
- Check that the thickness of the paper is 60 to 105 g/m^2. (60 to 163 g/m^2 for MP tray)
- Check that there is not too much paper set in each tray.

Step	Cause	Remedy
1	Registration clutch failure	Replace the registration clutch.
2	Main PCB failure	Replace the main PCB ASSY.

4.2.5 Paper is curled

<User Check>

- Select "Reduce Paper Curl" in the driver.
- Check that the thickness of the paper is 60 to 105 g/m^2. (60 to 163 g/m^2 for MP tray)

4.2.6 Only single surface is printed in duplex printing mode

<User Check>

- Rotate the paper 180° in the paper tray, and retry printing.
- Flip through the paper and reset it in the tray.
- Set the driver setting to duplex printing.
- Use A4 or Letter-size paper.

Step	Cause	Remedy
1	Duplex solenoid failure	Replace the duplex solenoid.
2	Main PCB failure	Replace the main PCB ASSY.

4.3 Troubleshooting for Image Defects

4.3.1 Image defect examples

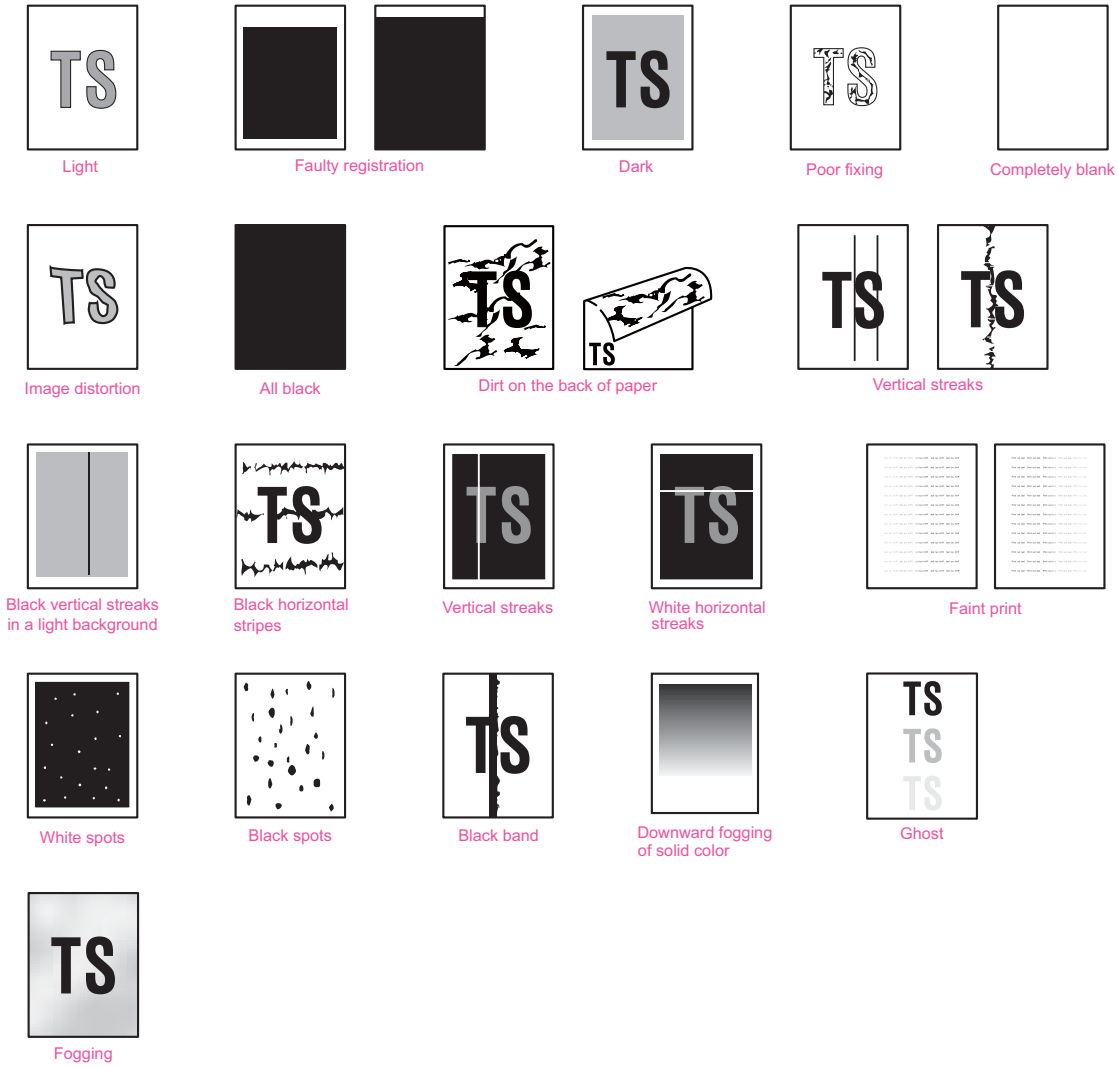

Fig. 2-10

Confidential

4.3.2 Troubleshooting according to image defect

End users can solve problems related to image defects as long as they follow the User Check items. If the problem still cannot be solved, implement each procedure according to the step number in the tables below.

■ Light

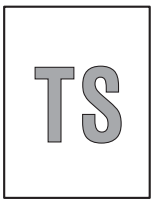

<User Check>

- Check the usage environment of the machine. Using the machine in high temperature and humidity or low temperature and humidity conditions can cause this problem.
- If the whole page is light, toner save mode may be ON. Turn OFF the toner save mode.
- Adjust the density using the Density Adjustment.
- Replace the drum unit with a new one.
- Replace the toner cartridge with a new one.

Step	Cause	Remedy
1	Dirt on electrodes of the drum unit	Clean the electrodes of the drum unit and those of the machine. (Refer to Fig. 2-11 or Fig. 2-12.)
2	Toner volume determination failure when a new toner cartridge is detected	Reset the developer roller counter. (Refer to "2.3 Reset Developer Roller Counter" in Chapter 5.)
3	Connection failure of the develop clutch 51R harness	Reconnect the develop clutch 51R harness.
4	Develop clutch 51R failure	Replace the develop clutch 51R.
5	Fuser unit failure	Replace the fuser unit.
6	High-voltage power supply PCB failure	Replace the high-voltage power supply PCB ASSY.
7	Laser unit failure	Replace the laser unit.
8	Main PCB failure	Replace the main PCB ASSY.

■ Electrodes location of the toner cartridge and drum unit

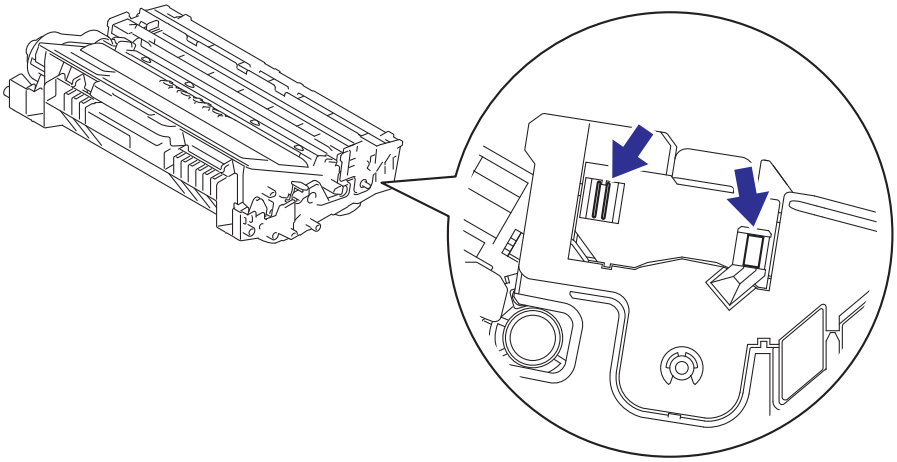

Fig. 2-11

■ Electrodes location of the machine

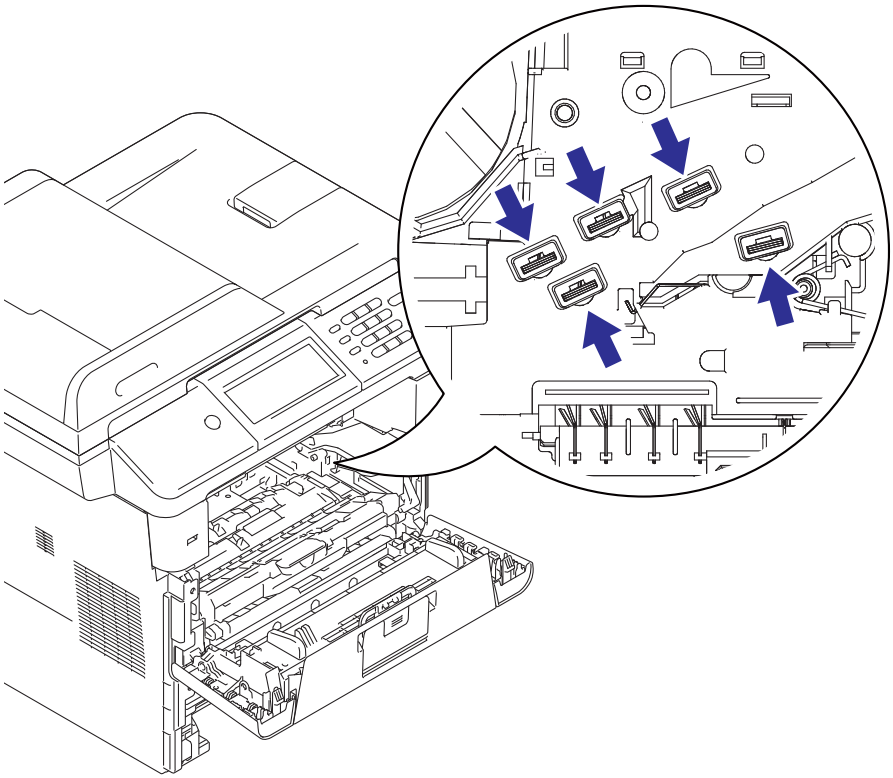

Fig. 2-12

■ Faulty registration

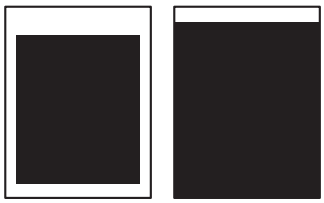

<User Check>
- Check that the appropriate paper type is selected in the driver.

Step	Cause	Remedy
1	Adjusted value of the laser unit is incorrect.	Refer to "2.1 Entering Adjusted Value of Laser Unit" in Chapter 4, and enter the adjusted value of the laser unit again.
2	Registration rear actuator caught in some sections of the machine	Reattach the registration rear actuator.
3	Laser unit failure	Replace the laser unit.

■ Dark

<User Check>
- Check the usage environment of the machine. Using the machine in high temperature and humidity conditions can cause this problem.
- Clean the corona wire.
- If a new toner cartridge has been set, check whether it was replaced with a used toner cartridge.
- Adjust the density using the Density Adjustment.
- Replace the drum unit with a new one.
- Replace the toner cartridge with a new one.

Step	Cause	Remedy
1	Dirt on electrodes of the drum unit	Clean the electrodes of the drum unit and those of the machine. (Refer to Fig. 2-11 or Fig. 2-12.)
2	High-voltage power supply PCB failure	Replace the high-voltage power supply PCB ASSY.
3	Laser unit failure	Replace the laser unit.
4	Main PCB failure	Replace the main PCB ASSY.

■ Poor fixing

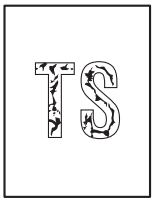

<User Check>
- Check the usage environment of the machine. Using the machine in high temperature and humidity or low temperature and humidity conditions can cause this problem.
- Select "Improve Toner Fixing" in the driver.
- Clean the corona wire.
- Replace the drum unit with a new one.
- Replace the toner cartridge with a new one.

Step	Cause	Remedy
1	Fuser unit failure	Replace the fuser unit.
2	High-voltage power supply PCB failure	Replace the high-voltage power supply PCB ASSY.
3	Low-voltage power supply PCB failure	Replace the low-voltage power supply PCB ASSY.
4	Laser unit failure	Replace the laser unit.
5	Main PCB failure	Replace the main PCB ASSY.

■ Completely blank

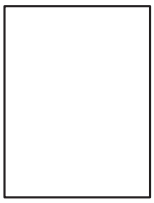

<User Check>
- Clean the corona wire.
- Replace the drum unit with a new one.
- Replace the toner cartridge with a new one.

Step	Cause	Remedy
1	Dirt on electrodes of the drum unit and those of the machine	Clean the electrodes of the drum unit and those of the machine. (Refer to Fig. 2-11 or Fig. 2-12.)
2	Laser unit attachment failure	Reattach the laser unit.
3	Laser unit failure	Replace the laser unit.
4	High-voltage power supply PCB failure	Replace the high-voltage power supply PCB ASSY.
5	Main PCB failure	Replace the main PCB ASSY.

■ Image distortion

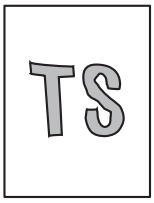

Step	Cause	Remedy
1	Laser unit attachment failure	Attach the laser unit correctly, and firmly tighten the screws.
2	Harness connection failure	Check the connection of all harnesses. If faulty, reconnect them.
3	Dirt on high-voltage electrodes and electrodes of the machine	Clean the high-voltage electrodes and electrodes of the machine.
4	Laser unit earth plate attachment failure (not grounded correctly)	Retighten the screws to secure the laser unit earth plate.
5	Laser unit failure	Replace the laser unit.
6	Main PCB failure	Replace the main PCB ASSY.

■ All black

<User Check>
- Clean the corona wire.
- Replace the drum unit with a new one.

Step	Cause	Remedy
1	Dirt on electrodes of the drum unit and those of the machine, and dirt on grounding wire	Clean the electrodes of the drum unit and those of the machine, and the grounding wire. (Refer to Fig. 2-11 or Fig. 2-12.)
2	Connection failure of the laser unit flat cable	Reconnect the laser unit flat cable correctly.
3	Earth plate contact failure (not grounded correctly)	Check the contact of the laser unit earth plate, and retighten the screws.
4	High-voltage power supply PCB failure	Replace the high-voltage power supply PCB ASSY.
5	Laser unit failure	Replace the laser unit.
6	Main PCB failure	Replace the main PCB ASSY.

■ Dirt on the back of paper

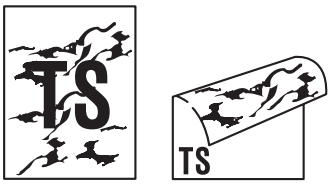

<User Check>
- This problem may disappear after printing multiple sheets of paper.
- Replace the toner cartridge with a new one.

Step	Cause	Remedy
1	Dirt on paper feed system	Wipe off the dirt.
2	Dirt on the fuser unit	Replace the fuser unit.

■ Vertical streaks

<User Check>
- Clean inside the machine and the corona wire of the drum unit.
- Return the corona wire cleaning tab to the [▲] position.
- This problem may disappear after printing multiple sheets of paper.
- Refer to the User's Guide to remove the dirt from the exposure drum using a cotton applicator.
- Replace the drum unit with a new one.
- Replace the toner cartridge with a new one.
- Clean the eject pinch roller.

Step	Cause	Remedy
1	Dirt on paper feed system	Wipe off the dirt on the sections shown in the illustration below.
2	Earth wires or earth plate attachment failure (not grounded correctly)	Retighten the screws to secure the earth wires or earth plate.
3	Scratches or dirt on the heat unit	Replace the fuser unit.

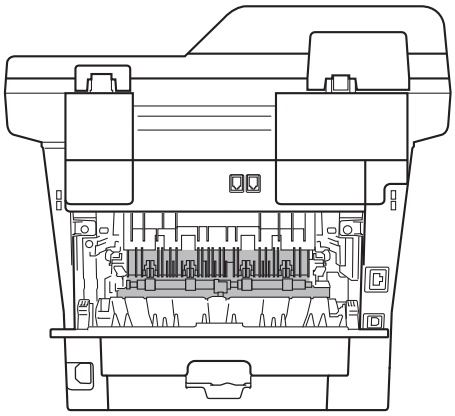

Fig. 2-13

CAUTION:
- If the machine prints the same pattern continuously, especially a pattern including vertical streaks, black vertical streaks may appear on the paper because the electrostatic performance of the exposure drum has lowered temporarily.

■ Black vertical streaks in a light background

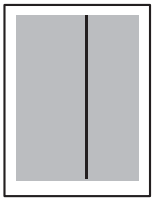

<User Check>
- Clean inside the machine and the corona wire of the drum unit.
- Refer to the User's Guide to remove the dirt from the exposure drum using a cotton applicator.
- Replace the drum unit with a new one.
- Replace the toner cartridge with a new one.

Step	Cause	Remedy
1	Dirt on paper feed system	Wipe off the dirt.
2	Scratches or dirt on the heat unit	Replace the fuser unit.
3	Foreign object in the laser unit	Replace the laser unit.

■ Black band

<User Check>
- Clean inside the machine and the corona wire of the drum unit.
- Return the corona wire cleaning tab to the [▲] position.
- The tray earth spring on the machine side may be dirty. Clean it with a dry cloth.
- Replace the toner cartridge with a new one.
- Replace the drum unit with a new one.

Step	Cause	Remedy
1	Tray earth spring is bent	Replace the paper tray.

■ Vertical streaks

<User Check>
- Check that there is no dust in the clearance between the toner cartridge and the drum frame.
- Replace the toner cartridge with a new one.
- Check the usage environment of the machine. Using the machine in high temperature and humidity or low temperature and humidity conditions can cause this problem.
- Check that the paper is not damp.
- Turn ON the power switch, and leave the machine for a while.
- Replace the drum unit with a new one.

Step	Cause	Remedy
1	Laser unit failure	Replace the laser unit.

■ White horizontal streaks

<User Check>

- This problem may disappear after printing multiple sheets of paper. When the machine has not been used for long periods, try printing several sheets of paper.
- Replace the drum unit with a new one.
- Replace the toner cartridge with a new one.

Step	Cause	Remedy
1	Dirt on electrodes of the drum unit and those of the machine	Clean the electrodes of the drum unit and those of the machine. (Refer to Fig. 2-11 or Fig. 2-12.)
2	Dirt on electrodes of the toner cartridge and those of the machine	Clean the electrodes of the toner cartridge and those of the machine. (Refer to Fig. 2-11, Fig. 2-12.)
3	Fuser unit failure	Replace the fuser unit.
4	High-voltage power supply PCB failure	Replace the high-voltage power supply PCB ASSY.

■ Black horizontal stripes

<User Check>
- Clean inside the machine and the corona wire of the drum unit.
- The tray earth spring on the machine side may be dirty. Clean it with a dry cloth.
- This problem may disappear after printing multiple sheets of paper.
- When the horizontal stripes appear at intervals of 45.3 mm, replace the toner cartridge with a new one.
- When the horizontal stripes appear at intervals of 94.2 mm, replace the drum unit with a new one.

Step	Cause	Remedy
1	Dirt on electrodes of the drum unit and those of the machine	Clean the electrodes of the drum unit and those of the machine. (Refer to Fig. 2-11 or Fig. 2-12.)
2	Dirt on electrodes of the toner cartridge and those of the machine	Clean the electrodes of the toner cartridge and those of the machine. (Refer to Fig. 2-11 or Fig. 2-12.)
3	Earth wires or earth plate attachment failure (not grounded correctly)	Retighten the screws to secure the earth wires or earth plate.
4	Tray earth spring is bent.	Replace the paper tray.
5	Scratches or dirt on the heat unit (horizontal stripes at intervals of 104 mm)	Replace the fuser unit.
6	High-voltage power supply PCB failure	Replace the high-voltage power supply PCB ASSY.

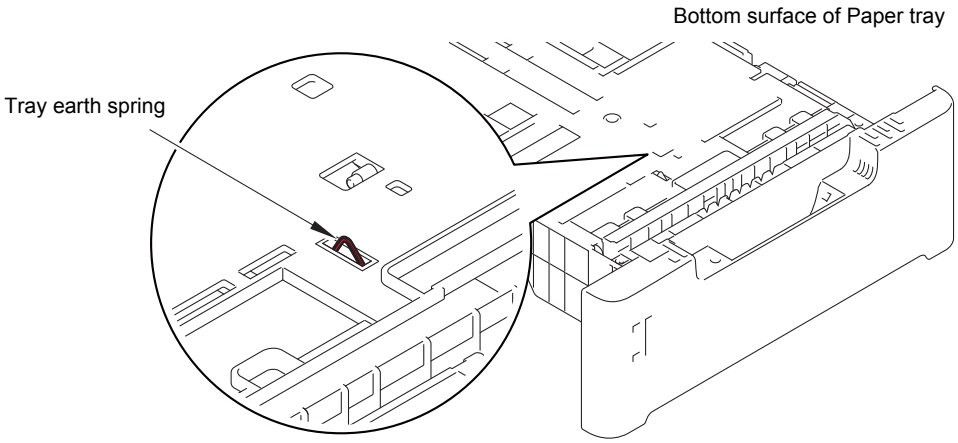

Fig. 2-14

CAUTION:
- Image defects which appear periodically may be caused by failure of rollers. Refer to the table below and determine the cause based on the diameter of the rollers or the pitch at which defects appear in the image.

Diameter of rollers and pitch which appears in the image

No.	Part name	Diameter	Pitch at which defects appear in the image
1	Developer roller	ø 20 mm	45.3 mm
2	Exposure drum	ø 30 mm	94.2 mm
3	Heat unit in the fuser unit	—	104 mm
4	Pressure roller in the fuser unit	ø 30 mm	94.2 mm

■ Faint print

<User Check>

- Check that the machine is installed on a level surface.
- Replace the toner cartridge with a new one.
- Replace the drum unit with a new one.

Step	Cause	Remedy
1	Relay front PCB failure	Replace the relay front PCB ASSY.
2	Toner sensor failure	Refer to "1.3.10 Check sensor operation (function code: 32)" in Chapter 5 to check the sensor operation. If the sensor operation is faulty, replace the toner sensor PCB ASSY.
3	Laser unit failure	Replace the laser unit.
4	Main PCB failure	Replace the main PCB ASSY.

■ White spots

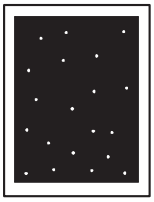

<User Check>

- Turn ON the power switch, and open the front cover and the back cover. Leave the machine for a while to remove condensation.
- Select "Improve Toner Fixing" in the driver.
- When the white spots appear at intervals of 45.3 mm, replace the toner cartridge with a new one.
- Refer to the User's Guide to remove the dirt from the exposure drum using a cotton applicator.
- When the white spots appear at intervals of 94.2 mm, replace the drum unit with a new one.

Step	Cause	Remedy
1	Dirt on the paper dust cleaning roller of the paper tray	Refer to the illustration below to clean the paper dust cleaning roller.
2	Dirt on electrodes of the drum unit and those of the machine	Clean the electrodes of the drum unit and those of the machine. (Refer to Fig. 2-11 or Fig. 2-12.)
3	Dirt on electrodes of the toner cartridge and those of the machine	Clean the electrodes of the toner cartridge and those of the machine. (Refer to Fig. 2-11 or Fig. 2-12.)
4	Relay front PCB failure	Replace the relay front PCB ASSY.
5	Toner sensor failure	Refer to "1.3.10 Check sensor operation (function code: 32)" in Chapter 5 to check the sensor operation. If the sensor operation is faulty, replace the toner sensor PCB ASSY.
6	High-voltage power supply PCB failure	Replace the high-voltage power supply PCB ASSY.
7	Main PCB failure	Replace the main PCB ASSY.

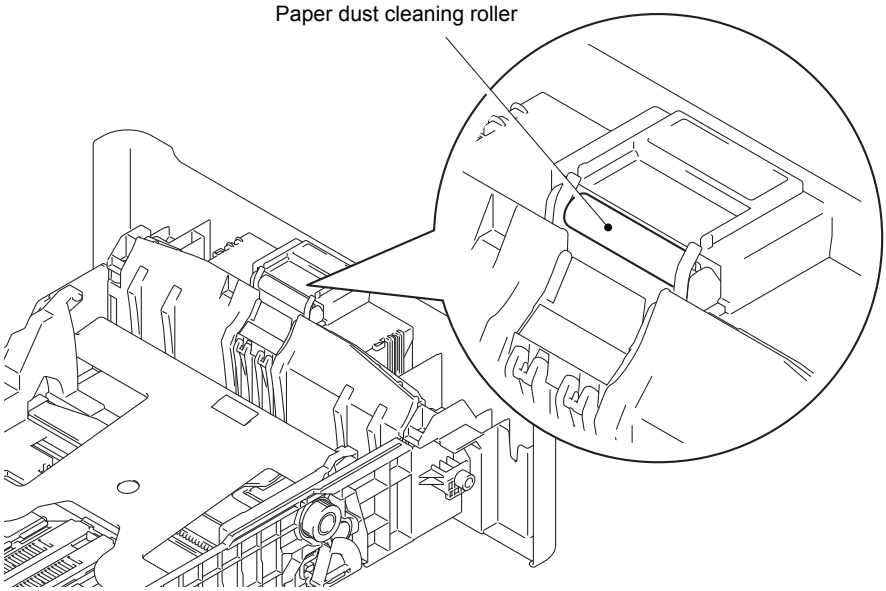

Fig. 2-15

■ Black spots

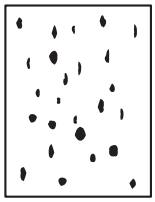

<User Check>
- When the black spots appear at intervals of 45.3 mm, replace the toner cartridge with a new one.
- Refer to the User's Guide to remove the dirt from the exposure drum using a cotton applicator.
- When the black spots appear at intervals of 94.2 mm, replace the drum unit with a new one.

Step	Cause	Remedy
1	Dirt on electrodes of the drum unit and those of the machine	Clean the electrodes of the drum unit and those of the machine. (Refer to Fig. 2-11 or Fig. 2-12.)
2	Dirt on electrodes of the toner cartridge and those of the machine	Clean the electrodes of the toner cartridge and those of the machine. (Refer to Fig. 2-11 or Fig. 2-12.)
3	Scratches or dirt on the heat unit (horizontal stripes at intervals of 104 mm), or dirt on the pressure roller	Replace the fuser unit.
4	High-voltage power supply PCB failure	Replace the high-voltage power supply PCB ASSY.
5	Main PCB failure	Replace the main PCB ASSY.

■ Downward fogging of solid color

<User Check>
- Replace the toner cartridge with a new one.

Step	Cause	Remedy
1	High-voltage power supply PCB failure	Replace the high-voltage power supply PCB ASSY.
2	Main PCB failure	Replace the main PCB ASSY.

■ Ghost

<User Check>

- Check the usage environment of the machine. Using the machine in high temperature and humidity or low temperature and humidity conditions can cause this problem.
- Check that the appropriate paper type is selected in the driver.
- Select "Reduce Ghosting" in the driver.
- Select "Improve Toner Fixing" in the driver.
- Replace the drum unit with a new one.

Step	Cause	Remedy
1	High-voltage power supply PCB failure	Replace the high-voltage power supply PCB ASSY.
2	Main PCB failure	Replace the main PCB ASSY.

■ Fogging

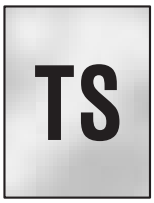

<User Check>

- Check the usage environment of the machine. Using the machine in high temperature and humidity or low temperature and humidity conditions can cause this problem.
- This problem may disappear after printing multiple sheets of paper.
- Replace the drum unit with a new one.
- Replace the toner cartridge with a new one.
- Do not use acid paper.

Step	Cause	Remedy
1	Relay front PCB failure	Replace the relay front PCB ASSY.
2	Toner sensor PCB failure	Refer to "1.3.10 Check sensor operation (function code: 32)" in Chapter 5 to check the sensor operation. If the sensor operation is faulty, replace the toner sensor PCB ASSY.
3	High-voltage power supply PCB failure	Replace the high-voltage power supply PCB ASSY.
4	Main PCB failure	Replace the main PCB ASSY.

CAUTION:

- This problem tends to occur when the life of the drum unit or toner cartridge is expiring.

4.4 Troubleshooting for Software Problems

End users can solve problems related to software, for instance, printing is not possible from a computer although the test print and Printer Settings print can be performed from the machine, as long as they follow the User Check items. If the problem still cannot be solved, follow each procedure according to the step number in the tables below.

4.4.1 Cannot print data

<User Check>

- Check that the USB cable, LAN cable, or parallel cable is not damaged.
- When using an interface switch, check that the correct machine is selected.
- Check the relevant section in the User's Guide.
- Check the driver setting.
- Reset the machine to the default settings. (Refer to the User's Guide.)

Step	Cause	Remedy
1	Machine connection	For Macintosh, check the Product ID*. When it is wrong, install the firmware.
2	Main PCB failure	Replace the main PCB ASSY.

* Check the Product ID on a Macintosh according to the following procedure:

(1) Select "About This Mac" from the "Apple" menu.

(2) Press the "More Info..." button in the "About This Mac" dialogue box.

(3) Select "USB" at the bottom of "Hardware" in the "Content" on the left side of the screen.

(4) Select "MFC-XXXX" or "DCP-XXXX" in the "USB Device Tree".

(5) Check the "Product ID" under "MFC-XXXX"or "DCP-XXXX".

Product ID (hexadecimal)

- DCP-8110D: 02Ach
- DCP-8110DN: 0291h
- DCP-8112DN: 02B5h
- DCP-8150DN: 0292h
- DCP-8152DN: 02B6h
- DCP-8155DN: 0293h
- DCP-8157DN: 02B7h
- DCP-8250DN: 0294h
- MFC-8510D: 029Dh
- MFC-8510DN: 0295h
- MFC-8512DN: 02B8h
- MFC-8515DN: 029Ch
- MFC-8520DN: 0296h
- MFC-8710DW: 0297h
- MFC-8712DW: 02B9h
- MFC-8810DW: 02D4h
- MFC-8910DW: 0298h
- MFC-8912DW: 02BCh
- MFC-8950DW: 0299h
- MFC-8952DW: 02BBh

4.5 Troubleshooting for Network Problems

4.5.1 Cannot print via network connection

<User Check>

- Check the relevant section in the Network Setting Guide.
- Check the network connection.
- Reset the network. (Refer to the User's Guide.)

Step	Cause	Remedy
1	Connection failure of the wireless LAN PCB harness	Reconnect the wireless LAN PCB harness.
2	Wireless LAN PCB failure	Replace the wireless LAN PCB ASSY.
3	Deformed LAN terminal pin Main PCB failure	Replace the main PCB ASSY.

Confidential

4.6 Troubleshooting for Control Panel Problems

4.6.1 Nothing is displayed on the LCD

Step	Cause	Remedy
1	AC cord failure	Replace the AC cord.
2	Connection failure of the panel harness	Check the connection of the panel harness, and reconnect it if necessary.
3	Connection failure of the backlight harness	Check the connection of the backlight harness, and reconnect it if necessary.
4	Connection failure of the LCD harness	Check the connection of the LCD harness, and reconnect it if necessary.
5	LCD failure	Replace the LCD.
6	LCD flat cable or LCD ASSY failure	Replace the LCD ASSY.
7	Backlight ASSY failure	Replace the backlight ASSY.
8	Panel PCB failure	Replace the panel PCB ASSY.
9	Touch panel PCB failure	Replace the touch panel PCB ASSY.
10	Low-voltage power supply PCB failure	Replace the low-voltage power supply PCB ASSY.
11	Main PCB failure	Replace the main PCB ASSY.

4.6.2 Control panel is inoperable

<User Check>

- Check that the function lock is not set.

Step	Cause	Remedy
1	Panel unit attachment failure	Reattach the panel unit.
2	Connection failure of the panel PCB harness	Check the connection of the panel PCB harness, and reconnect it if necessary.
3	Connection failure of the touch panel PCB harness	Check the connection of the touch panel PCB harness, and reconnect it if necessary.
4	Connection failure of the touch panel harness	Check the connection of the touch panel harness, and reconnect it if necessary.
5	Rubber key failure	Replace the rubber key R, L or C.
6	Panel PCB failure	Replace the panel PCB ASSY.
7	Touch panel PCB failure	Replace the touch panel PCB ASSY.
8	Touch panel ASSY failure	Replace the touch panel ASSY.
9	Low-voltage power supply PCB failure	Replace the low-voltage power supply PCB ASSY.
10	Main PCB failure	Replace the main PCB ASSY.

4.7 Troubleshooting for Toner and Drum Problems

4.7.1 New toner is not detected

<User Check>

- Be sure to set a new toner cartridge.

Step	Cause	Remedy
1	New toner actuator caught in some sections of the machine	Reattach the new toner actuator.
2	Connection failure of the relay front PCB harness	Reconnect the relay front PCB harness.
3	New toner sensor failure	Refer to "1.3.10 Check sensor operation (function code: 32)" in Chapter 5 to check the sensor operation. If the sensor operation is faulty, replace the relay front PCB ASSY.
4	Main PCB failure	Replace the main PCB ASSY.

4.7.2 Cartridge error (toner cartridge cannot be detected)

Failed to determine whether the toner cartridge is new or old.

Step	Cause	Remedy
1	The power switch was turned OFF or the front cover was opened while a new toner cartridge is being detected.	Reset the developer roller counter. (Refer to "2.3 Reset Developer Roller Counter" in Chapter 5.)
2	New toner actuator coming off	Reattach the new toner actuator.
3	New toner sensor failure	Refer to "1.3.10 Check sensor operation (function code: 32)" in Chapter 5 to check the sensor operation. If the sensor operation is faulty, replace the relay front PCB ASSY.

4.7.3 Drum error

<User Check>

- Clean the corona wire of the drum unit.
- Replace the drum unit with a new one, and reset the drum counter.

Step	Cause	Remedy
1	Dirt (dust) on electrodes of the drum unit	Clean the electrodes of the drum unit and those of the machine. (Refer to Fig. 2-11 or Fig. 2-12.)
2	High-voltage power supply PCB failure	Replace the high-voltage power supply PCB ASSY.
3	Main PCB failure	Replace the main PCB ASSY.

4.8 Troubleshooting for Fuser Unit Problems

4.8.1 Fuser unit failure

Step	Cause	Remedy
1	Harness connection failure between fuser unit and eject sensor PCB	Check the harness connection between the fuser unit and the eject sensor PCB, and reconnect it if necessary.
2	Harness connection failure between fuser unit and low-voltage power supply PCB	Check the harness connection between the fuser unit and the low-voltage power supply PCB, and reconnect it if necessary.
3	Connection failure of the eject sensor PCB harness	Check the connection of the eject sensor harness, and reconnect it if necessary.
4	Eject sensor PCB failure	Refer to "1.3.10 Check sensor operation (function code: 32)" in Chapter 5 to check the sensor operation. If the sensor operation is faulty, replace the eject sensor PCB ASSY.
5	Low-voltage power supply PCB failure	Replace the low-voltage power supply PCB ASSY.
6	Fuser unit failure	Replace the fuser unit.
7	Main PCB failure	Replace the main PCB ASSY.

CAUTION:

- Turn the power switch OFF and then ON again. Leave the machine for ten minutes. This problem may then be cleared.

4.9 Troubleshooting for Laser Unit Problems

4.9.1 Laser unit failure

<User Check>

- Turn ON the power switch, and open the front cover and the back cover. Leave the machine for a while to remove condensation.

Step	Cause	Remedy
1	Earth plate contact failure	Check the contact of the laser unit earth plate, and retighten the screws.
2	Connection failure of the laser unit flat cable	Check the proper connection of the laser unit flat cable, and reconnect it if necessary.
3	Laser unit failure	Replace the laser unit.
4	Main PCB failure	Replace the main PCB ASSY.

4.10 Troubleshooting for PCB Problems

4.10.1 Main PCB failure

<User Check>

- Turn the power switch OFF and then ON again.
- Install the latest firmware.

Step	Cause	Remedy
1	Main PCB failure	Replace the main PCB ASSY.

4.10.2 High-voltage power supply PCB failure

Step	Cause	Remedy
1	Connection failure of the high-voltage power supply PCB harness	Check the harness connection between the high-voltage power supply PCB and the main PCB ASSY, and reconnect it if necessary.
2	Contact failure of electrode terminals of the high-voltage power supply PCB	Clean the electrode terminals of the high-voltage power supply PCB.
3	High-voltage power supply PCB failure	Replace the high-voltage power supply PCB ASSY.
4	Low-voltage power supply PCB failure	Replace the low-voltage power supply PCB ASSY.
5	Main PCB failure	Replace the main PCB ASSY.

4.10.3 Low-voltage power supply PCB failure

Step	Cause	Remedy
1	Connection failure of the low-voltage power supply PCB harness	Check the connection of the low-voltage power supply PCB harness, and reconnect it if necessary.
2	Low-voltage power supply PCB failure	Replace the low-voltage power supply PCB ASSY, and reset the irregular power supply detection counter.
3	Main PCB failure	Replace the main PCB ASSY.

CAUTION:

- The irregular power supply detection error (error code EF00) occurs when there is a large distortion in the power supply voltage supplied to the machine. In this case, if the same power supply is used, the same error may occur even when the low-voltage power supply PCB ASSY is replaced. Ask the user to review the installation environment.

4.10.4 Out of memory

Memory full

<User Check>

- Then print the stored data.
- Reduce the data capacity or reduce the print resolution.

Step	Cause	Remedy
1	Main PCB failure	Replace the main PCB ASSY.

4.11 Troubleshooting for Document Feeding Problems

4.11.1 Multiple sheets of document are fed

<User Check>

- Check that paper used for the document is not thinner than the standard.

Step	Cause	Remedy
1	Abrasion of the ADF separation pad.	Replace the ADF separation pad.

4.11.2 Document becomes wrinkled

<User Check>

- Check that the document guide is adjusted to suit the document size.
- Check that the document is not curled.

Step	Cause	Remedy
1	Abrasion of the document separate roller	Replace the document separate roller ASSY.
2	Abrasion of the feed rollers	Replace the ADF unit.

4.11.3 Document size is not detected correctly

<User Check>

- Check that the document size is within the standard.

Step	Cause	Remedy
1	Document scanning position actuator caught in some sections of the machine	Reattach the document scanning position actuator.
2	ADF motor failure	Replace the ADF motor ASSY.
3	Main PCB failure	Replace the main PCB ASSY.

4.12 Troubleshooting for Image Defects

4.12.1 Defect examples

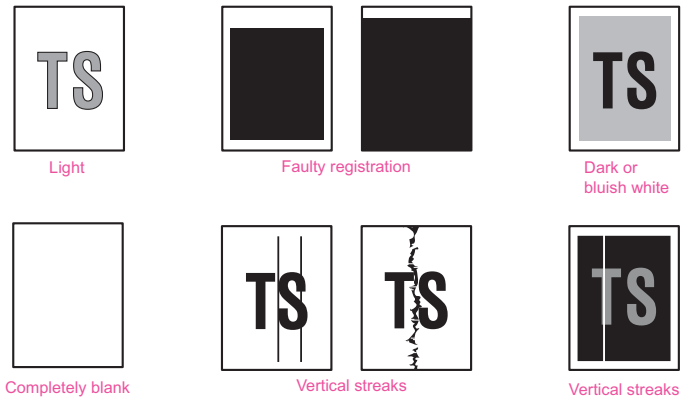

Fig. 2-16

4.12.2 Troubleshooting according to image defect

■ Light

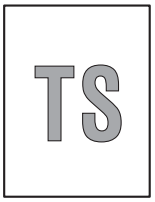

<User Check>
- Check that the contrast setting is not too light.
- Clean the document glass or the ADF glass.
- Clean the first side document hold or second side document hold.

Step	Cause	Remedy
1	Incorrect white level correction data	Execute function code 55.
2	First side CIS unit or second side CIS unit failure	Replace the first side CIS unit or second side CIS unit.
3	Main PCB failure	Replace the main PCB ASSY.

■ Faulty registration

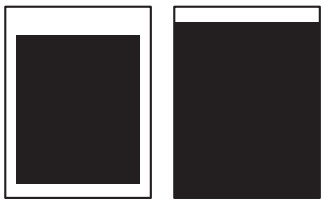

(1) ADF

Step	Cause	Remedy
1	First side document scanning position actuator caught in some sections of the machine	Reattach the first side document scanning position actuator.
2	Second side document scanning position actuator caught in some sections of the machine	Reattach the second side document scanning position actuator.

(2) Document scanner unit

Step	Cause	Remedy
1	First side CIS unit failure	Replace the first side CIS unit.

■ Dark or bluish white

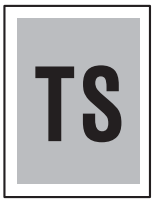

<User Check>
- Check that the contrast setting is not too dark.

Step	Cause	Remedy
1	Incorrect white level correction data	Execute function code 55.
2	First side CIS unit or second side CIS unit failure	Replace the first side CIS unit or second side CIS unit.
3	Main PCB failure	Replace the main PCB ASSY.

■ Completely blank

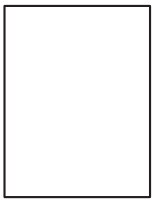

<User Check>
- Check that the document is not reversed.
- Check that the document is set in the ADF correctly.

Step	Cause	Remedy
1	Incorrect white level correction data	Execute function code 55.
2	First side CIS unit or second side CIS unit failure	Replace the first side CIS unit or second side CIS unit.
3	Main PCB failure	Replace the main PCB ASSY.

■ Vertical streaks

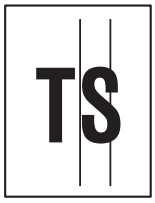

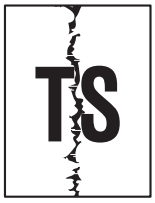

<User Check>
- Clean the document glass or the ADF glass.
- Clean the first side document hold or second side document hold.

Step	Cause	Remedy
1	First side CIS unit or second side CIS unit failure	Replace the first side CIS unit or second side CIS unit.

■ Vertical streaks

<User Check>
- Clean the document glass or the ADF glass.
- Clean the first side document hold or second side document hold.

Step	Cause	Remedy
1	First side CIS unit or second side CIS unit failure	Replace the first side CIS unit or second side CIS unit.

4.13 Troubleshooting for Fax Problems

4.13.1 Fax cannot be sent

<User Check>

- Check that the line cord is inserted into the socket correctly.
- Check that the dial function setting (tone/pulse) is correct.

Step	Cause	Remedy
1	Connection failure of the NCU PCB harness	Check the connection of the NCU PCB harness, and reconnect it if necessary.
2	Rubber key failure	Replace the rubber key.
3	Panel PCB failure	Replace the panel PCB ASSY.
4	Touch panel PCB failure	Replace the touch panel PCB ASSY.
5	NCU PCB failure	Replace the NCU PCB ASSY.
6	First side CIS unit or second side CIS unit failure	Replace the first side CIS unit or second side CIS unit.
7	Main PCB failure	Replace the main PCB ASSY.

4.13.2 Fax cannot be received

<User Check>

- Check that the line cord is inserted into the socket correctly.
- Check that the receiving mode setting is correct.

Step	Cause	Remedy
1	Connection failure of the NCU PCB harness	Check the connection of the NCU PCB harness, and reconnect it if necessary.
2	NCU PCB failure	Replace the NCU PCB ASSY.
3	Main PCB failure	Replace the main PCB ASSY.

4.13.3 Bell does not sound

<User Check>

- Check that "0" is not set for the number of rings.
- Check that "0" is not set for the bell volume.

Step	Cause	Remedy
1	Connection failure of the speaker harness	Check the connection of the speaker harness, and reconnect it if necessary.
2	Speaker failure	Replace the speaker unit.
3	NCU PCB failure	Replace the NCU PCB ASSY.
4	Main PCB failure	Replace the main PCB ASSY.

4.13.4 Communication error occurs

<User Check>

- Check whether there is any noise source near the machine.

Step	Cause	Remedy
1	Connection failure of the NCU PCB harness	Check the connection of the NCU PCB harness, and reconnect it if necessary.
2	NCU PCB failure	Replace the NCU PCB ASSY.
3	Main PCB failure	Replace the main PCB ASSY.

4.14 Troubleshooting for Other Problems

4.14.1 Machine is not turned ON

<User Check>

- Connect the AC cord correctly.

Step	Cause	Remedy
1	Connection failure of the panel PCB harness	Check the connection of the panel PCB harness, and reconnect it if necessary.
2	Panel PCB failure	Replace the panel PCB ASSY.
3	Touch panel PCB failure	Replace the touch panel PCB ASSY.
4	Low-voltage power supply PCB failure	Replace the low-voltage power supply PCB ASSY.
5	Main PCB failure	Replace the main PCB ASSY.

4.14.2 Main fan does not rotate

Step	Cause	Remedy
1	Connection failure of the main fan harness	Check the connection of the main fan harness, and reconnect it if necessary.
2	Connection failure of the toner LED PCB harness	Check the connection of the toner LED PCB harness, and reconnect it if necessary.
3	Main fan failure	Replace the main fan.
4	Main PCB failure	Replace the main PCB ASSY.

4.14.3 Main motor failure

Step	Cause	Remedy
1	Connection failure of the main motor harness	Check the connection of the main motor harness, and reconnect it if necessary.
2	Main motor failure	Replace the main motor ASSY.
3	Low-voltage power supply PCB failure	Replace the low-voltage power supply PCB ASSY.
4	Main PCB failure	Replace the main PCB ASSY.

4.14.4 Unusual noise is generated from the machine

<User Check>

- Check that the covers are closed correctly.
- Set the duplex tray correctly.
- Set the paper trays correctly.

Step	Cause	Remedy
1	Possible cause differs depending on the location. Identify the location with the problem	When the location with the problem is identified, check for any foreign object around that location.
2	Insufficient grease on parts	Re-grease the parts.
3	Bent or defective part	Replace the part.

4.14.5 Malfunction of the memory

<User Check>

- Replace DIMM.

Step	Cause	Remedy
1	Main PCB failure	Replace the main PCB ASSY.

CHAPTER 3

DISASSEMBLY/REASSEMBLY

CHAPTER 3 DISASSEMBLY/REASSEMBLY

This chapter describes procedures for disassembling and reassembling the machine with relates notes.

The provided disassembly order flow enables you to take in the disassembly procedure of related part at a glance.

At the start of disassembling, you can check the disassembly order flow which guides you through a shortcut to get to the part.

This chapter also covers screw tightening torques and lubrication points where the specified lubrication should be applied when the machine is assembled.

CONTENTS

1. SAFETY PRECAUTIONS 3-1
2. PACKING 3-2
3. SCREW CATALOGUE 3-3
4. SCREW TORQUE LIST 3-4
5. LUBRICATION 3-7
6. OVERVIEW OF GEARS 3-10
7. HARNESS ROUTING 3-12
8. DISASSEMBLY FLOW CHART 3-20
9. DISASSEMBLY PROCEDURE 3-22
   - 9.1 Preparation 3-22
   - 9.2 Paper tray 1 3-23
   - 9.3 Back cover / Outer chute 3-25
   - 9.4 Fuser cover 3-26
   - 9.5 MP cover ASSY 3-27
   - 9.6 Front cover ASSY 3-28
   - 9.7 Side cover L / Access cover 3-29
   - 9.8 Side cover R ASSY 3-30
   - 9.9 ADF unit 3-31
     - 9.9.1 Hinge ASSY L 3-33
     - 9.9.2 Hinge R 3-33
     - 9.9.3 ADF document output support flap 3-34
     - 9.9.4 Document sub tray 3-34
     - 9.9.5 ADF cover ASSY 3-34
     - 9.9.6 Gear cover 3-36
     - 9.9.7 Document separate roller ASSY 3-37
     - 9.9.8 ADF separation pad spring / ADF separation pad 3-38
     - 9.9.9 Second side CIS unit / Second side CIS flat cable (duplex scanning models only) 3-41
     - 9.9.10 Upper ADF chute 3-43

9.9.11 ADF cover/document detection sensor PCB ASSY / First side document scanning position sensor PCB ASSY / Second side document scanning position sensor PCB ASSY (duplex scanning models only) 3-45
9.9.12 Drive frame ASSY / Document feed roller ASSY 1 3-47
9.9.13 ADF motor ASSY 3-52
9.9.14 First side document hold 3-52
9.10 Panel cover / Printed panel cover 3-53
9.11 Document scanner unit 3-60
9.11.1 First side CIS unit 3-62
9.12 Joint cover 3-67
9.13 Wireless LAN PCB ASSY 3-68
9.14 USB host PCB ASSY 3-68
9.15 Speaker unit 3-69
9.16 NCU PCB ASSY 3-70
9.17 Main PCB ASSY 3-71
9.18 Fuser unit 3-73
9.19 Laser unit 3-76
9.20 Low-voltage power supply PCB ASSY 3-78
9.21 Toner LED PCB ASSY 3-81
9.22 Main fan 3-83
9.23 Air duct / Filter 3-85
9.24 Relay front PCB ASSY 3-86
9.25 Registration clutch / T1 clutch 3-87
9.26 Main frame L ASSY 3-88
9.27 Main motor ASSY 3-90
9.28 Develop joint gear 37 / Develop joint 3-92
9.29 LT drive gear 29 3-93
9.30 Toner sensor PCB ASSY 3-94
9.31 MP solenoid 3-95
9.32 Develop clutch 51R / Develop one way clutch 53 3-96
9.33 New toner actuator 3-97
9.34 Internal temperature thermistor 3-98
9.35 Fuser drive gear 39 3-99
9.36 Duplex solenoid 3-101
9.37 Back cover sensor 3-102
9.38 LT connector (T1) 3-103
9.39 T1 roller holder ASSY 3-104
9.40 High-voltage power supply PCB ASSY 3-105
9.41 Eject sensor PCB ASSY 3-108
9.42 MP roller holder ASSY / MP separation pad ASSY / MP separation pad spring 3-109
9.43 T1 paper feed sensor PCB ASSY / T1 paper feed actuator / T1 paper feed actuator spring 3-110

9.44 MP paper empty sensor PCB ASSY / MP paper empty actuator 1 / MP paper empty actuator 2 3-112
9.45 Registration front/rear sensor PCB ASSY / Registration front actuator / Registration rear actuator / Registration actuator spring 3-115
10. DISASSEMBLY PROCEDURE (LT UNIT) 3-118
10.1 Paper tray 2 3-118
10.2 T2 roller holder ASSY 3-120
10.3 T2 side cover L 3-121
10.4 T2 side cover R 3-122
10.5 T2 front cover ASSY 3-123
10.6 T2 relay PCB ASSY 3-124
10.7 T2 clutch 3-125
10.8 T2 paper feed sensor PCB ASSY 3-126
10.9 T2 back cover 3-130
10.10 LT connector ASSY (T2) 3-131

1. SAFETY PRECAUTIONS

To avoid creating secondary problems by mishandling, follow the warnings and precautions below during maintenance work.

WARNING

Some parts inside the machine are extremely hot immediately after the machine is used. When opening the front cover ASSY or back cover to access any parts inside the machine, never touch the shaded parts shown in the following figures.

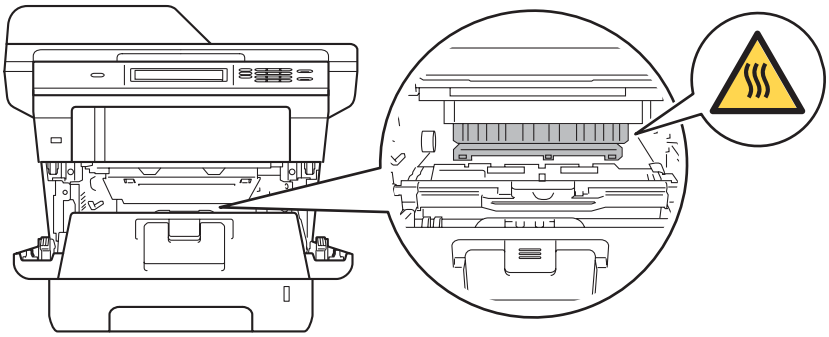

- Be careful not to lose screws, washers, or other parts removed.
- Be sure to apply grease to applicable positions specified in this chapter.
- When using soldering irons or other heat-generating tools, take care not to accidentally damage parts such as wires, PCBs and covers.
- Static electricity charged in your body may damage electronic parts. When transporting PCBs, be sure to wrap them in conductive sheets.
- When replacing the PCB and all the other related parts, put on a grounding wrist band and perform the job on a static mat. Also take care not to touch the conductor sections on the flat cables or on the wire harness.
- After disconnecting flat cables, check that each cable is not damaged at its end or shortcircuited.
- When connecting flat cables, do not insert them at an angle. After insertion, check that the cables are not at an angle.
- When connecting or disconnecting harnesses, hold the connector body, not the cables. If the connector is locked, release it first.
- After a repair, check not only the repaired portion but also harness treatment. Also check that other related portions are functioning properly.
- Violently closing the joint cover without mounting the toner cartridge and the drum unit can damage the machine.
- After assembly, it is recommended to conduct dielectric strength test and continuity test.
- When mounting the power switch, check that the tabs are secured to the frame firmly and that the harness is not caught in the frame.
- When mounting the inlet, check that the inlet is housed in the frame completely and that the harness is not caught in the frame.
- The insulation sheet should not be damaged.

2. PACKING

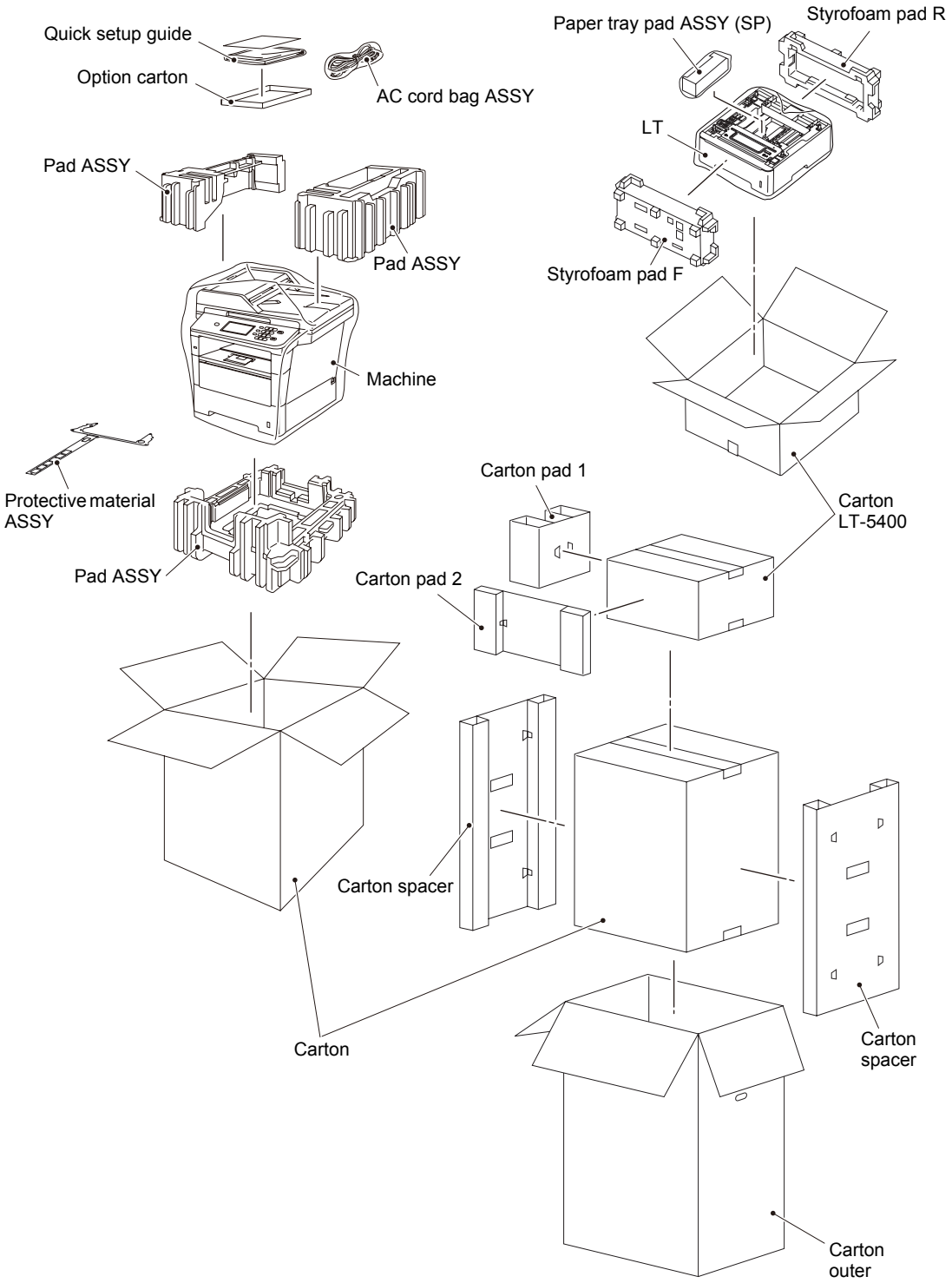
Quick setup guide
Option carton
AC cord bag ASSY
Paper tray pad ASSY (SP)
Styrofoam pad R
LT
Pad ASSY
Pad ASSY
Styrofoam pad F
Machine
Protective material ASSY
Pad ASSY
Carton pad 1
Carton LT-5400
Carton pad 2
Carton spacer
Carton
Carton spacer
Carton outer

3. SCREW CATALOGUE

Taptite bind B

Taptite bind B M3x10	
Taptite bind B M4x12	

Taptite pan

Taptite pan B M3x8	
Taptite pan B M4x14	

Taptite cup S

Taptite cup S M3x6 SR	
Taptite cup S M3x8 SR	
Taptite cup S M3x12	

Taptite cup B

Taptite cup B M3x8	
Taptite cup B M3x10	
Taptite cup B M4x12	

Taptite flat B

Taptite flat B M3x10	

Screw bind

Screw bind M3x4	

Screw pan (S/P washer)

Screw pan (S/P washer) M3x6 DA	
Screw pan (S/P washer) M3x12 DB	
Screw pan (S/P washer) M3.5x6 DA	

Screw pan

Screw pan M4x8	

Confidential

4. SCREW TORQUE LIST

Note:

- For verifying the shape of each screw, refer to "3.SCREW CATALOGUE" in this chapter.

Location of screw	Screw type	Q'ty	Tightening torque N.m (kgf.cm)
T1 tray cover	Taptite bind B M4x12	2	0.8±0.1(8±1)
Side cover L	Taptite bind B M4x12	2	0.8±0.1(8±1)
Side cover R ASSY	Taptite bind B M4x12	2	0.8±0.1(8±1)
Main shield cover plate	Taptite cup S M3x8 SR	4	0.5±0.1(5±1)
ADF unit	Taptite bind B M4x12	2	0.8±0.1(8±1)
Hinge ASSY L	Taptite cup S M3x12	3	0.85±0.05(8.5±0.5)
Hinge support R	Taptite cup B M3x10	1	0.5±0.05(5±0.5)
Hinge arm R	Taptite cup B M3x10	3	0.5±0.05(5±0.5)
ADF separation pad holder	Taptite cup B M3x10	1	0.5±0.05(5±0.5)
Upper ADF chute	Taptite cup B M3x10	6	0.5±0.05(5±0.5)
Lower ADF chute	Taptite cup B M3x10	3	0.5±0.05(5±0.5)
ADF earth harness	Taptite cup S M3x8 SR	1	0.7±0.1(7±1)
Drive frame ASSY	Taptite cup B M3x10	3	0.5±0.1(5±1)
ADF motor ASSY	Screw pan (S/P washer) M3x6 DA	1	Legal model : 0.6±0.1(6±1)
		1	A4 model : 0.35±0.05(3.5±0.5)
Control panel ASSY (Touch panel model)	Taptite bind B M4x12	2	0.65±0.05(6.5±0.5)
Touch panel PCB harness	Taptite bind B M4x12 (Machine side)	1	0.8±0.1(8±1)
	Screw pan (S/P washer) M3x6 DA (Panel PCB ASSY side)	1	0.7±0.1(7±1)
Panel PCB ASSY (Touch panel model)	Screw pan (S/P washer) M3x6 DA	2	0.7±0.1(7±1)
Touch panel plate (Touch panel model)	Taptite cup B M3x10	7	0.5±0.05(5±0.5)
Control panel ASSY (Non touch panel model)	Taptite bind B M4x12	3	0.65±0.05(6.5±0.5)
Document scanner unit	Taptite bind B M4x12	5	0.8±0.1(8±1)
Document scanner top cover ASSY	Taptite bind B M4x12	5	0.65±0.05(6.5±0.5)
NCU earth harness (Low-voltage power supply PCB ASSY side)	Screw pan M4x8	1	0.5±0.1(5±1)
NCU earth harness (NCU PCB ASSY side)	Screw pan (S/P washer) M3.5x6 DA	1	0.45±0.05(4.5±0.5)

Location of screw	Screw type	Q'ty	Tightening torque N.m (kgf.cm)
Earth plate *1	Taptite cup S M3x8 SR	1	0.7±0.1(7±1)
	Taptite bind B M4x12 (Non touch panel only)	1	0.8±0.1(8±1)
Joint cover	Taptite bind B M4x12	4	0.8±0.1(8±1)
USB host PCB ASSY	Taptite bind B M4x12	2	0.8±0.1(8±1)
NCU unit	Taptite bind B M4x12	2	0.8±0.1(8±1)
NCU shield cover	Screw pan (S/P washer) 3.5x6 DA	1	0.45±0.05(4.5±0.5)
NCU PCB ASSY	Taptite cup S M3x6 SR	2	0.45±0.05(4.5±0.5)
Main PCB ASSY	Taptite cup S M3x8 SR	6	0.5±0.1(5±1)
Fuser unit line cover R	Taptite bind B M4x12	1	0.8±0.1(8±1)
Fuser unit line cover L	Taptite pan B M4x14	1	0.8±0.1(8±1)
Fuser unit	Taptite pan B M4x14	1	0.8±0.1(8±1)
Laser unit	Taptite cup S M3x8 SR	4	0.8±0.05(8±0.5)
Scanner earth plate	Taptite cup S M3x8 SR (Fastening side of scanner plate)	1	0.8±0.1(8±1)
	Taptite cup S M3x8 SR (LV shield plate cover side)	1	0.5±0.1(5±1)
LV shield plate cover	Taptite cup S M3x8 SR	3	0.5±0.1(5±1)
	Taptite bind B M4x12	1	0.8±0.1(8±1)
	Screw pan M4x8	1	0.5±0.1(5±1)
Inlet	Taptite flat B M3x10	1	0.5±0.1(5±1)
Earth harness	Screw pan M4x8	1	0.5±0.1(5±1)
Low-voltage power supply PCB ASSY	Taptite cup S M3x8 SR	1	0.5±0.1(5±1)
	Taptite bind B M4x12	2	0.8±0.1(8±1)
Under bar earth plate R	Taptite cup S M3x8 SR	1	0.5±0.1(5±1)
LV shield plate	Taptite bind B M4x12	1	0.8±0.1(8±1)
Hold cover 1	Taptite bind B M4x12	1	0.8±0.1(8±1)
Toner LED PCB ASSY	Taptite pan B M3x8	1	0.5±0.1(5±1)
Hold cover 2	Taptite bind B M4x12	2	0.8±0.1(8±1)
Under bar (Rear side) (DCP-8250DN/MFC-8950DW/ 8950DWT/8952DW/8952DWT only)	Taptite bind B M4x12	2	0.8±0.1(8±1)
Under bar (Front side)	Taptite bind B M4x12	2	0.8±0.1(8±1)
Under bar earth plate L	Taptite cup S M3x8 SR	1	0.8±0.1(8±1)
Main frame L ASSY	Taptite cup S M3x8 SR	3	0.8±0.1(8±1)
	Taptite bind B M4x12	4	0.8±0.1(8±1)
Drive sub ASSY	Taptite bind B M4x12	8	0.8±0.1(8±1)
Main motor ASSY	Taptite cup S M3x8 SR	4	0.8±0.1(8±1)
Main motor cover (only for models with main motor cover)	Taptite bind B M3x10	2	0.5±0.1(5±1)

Confidential

Location of screw	Screw type	Q'ty	Tightening torque N.m (kgf.cm)
MP solenoid	Taptite bind B M3x10	1	0.5±0.1(5±1)
Main PCB shield calking ASSY	Taptite bind B M4x12	4	0.8±0.1(8±1)
Duplex solenoid	Taptite bind B M3x10	1	0.5±0.1(5±1)
Bottom frame L	Taptite bind B M4x12	3	0.8±0.1(8±1)
Base plate	Taptite bind B M4x12	4	0.8±0.1(8±1)
	Screw pan (S/P washer) M3x12DB	2	0.45±0.05(4.5±0.5)
High-voltage power supply PCB ASSY	Taptite bind B M4x12	2	0.8±0.1(8±1)
T1 paper feed actuator holder ASSY	Taptite bind B M3x10	1	0.5±0.1(5±1)
Main frame R	Taptite bind B M4x12	5	0.8±0.1(8±1)
MP feed frame	Taptite bind B M3x10	2	0.5±0.1(5±1)
MP paper empty sensor PCB ASSY	Taptite bind B M3x10	1	0.5±0.1(5±1)
T2 tray cover	Taptite bind B M4x12	2	0.8±0.1(8±1)
T2 side cover L	Taptite bind B M4x12	1	0.8±0.1(8±1)
T2 side cover R	Taptite bind B M4x12	1	0.8±0.1(8±1)
T2 front cover ASSY	Taptite cup S M3x8 SR	1	0.8±0.1(8±1)
Under bar (Two)	Taptite bind B M4x12	4	0.8±0.1(8±1)
T2 frame R unit	Taptite cup S M3x8 SR	2	0.8±0.1(8±1)
	Taptite bind B M4x12	2	0.8±0.1(8±1)
T2 paper feed frame unit	Taptite cup S M3x8 SR	3	0.8±0.1(8±1)
T2 front beam	Taptite bind B M4x12	2	0.8±0.1(8±1)
T2 paper feed actuator holder ASSY	Taptite bind B M3x10	1	0.5±0.1(5±1)
T2 back cover	Taptite bind B M4x12	2	0.8±0.1(8±1)

*1 South Korean models are not equipped with the earth plate, taptite cup S M3x8 SR screw, and tapttite bind B M4x12 screw.

5. LUBRICATION

Lubricating oil type (Maker name)	Lubrication point			Quantity of lubrication
FLOIL BG-10KS (Kanto Kasei)	Fuser drive gear 39		10 places	1.5 mm dia. ball
	Develop one way clutch 53		5 places	
	Develop clutch 51R		1 places	
	Develop joint gear 37		4 places	
BDX-313A (Kanto Kasei)	Document scanner unit	Legal model	16 places	1.5 mm dia. ball
		A4 model	14 places	
	Hinge ASSY L		9 places	2.0 mm dia. ball
	Hinge R		4 places	2.5 mm dia. ball
			2 places	3.5 mm dia. ball

■ **Fuser drive gear 39**

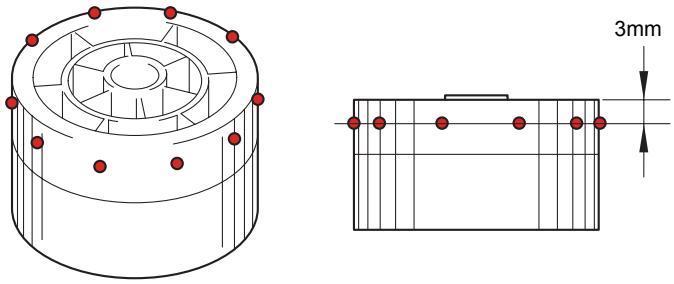

Fig. 3-1

■ **Develop one way clutch 53**

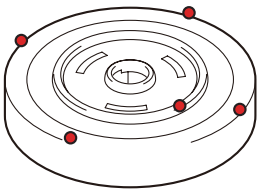

Fig. 3-2

■ **Develop clutch 51R**

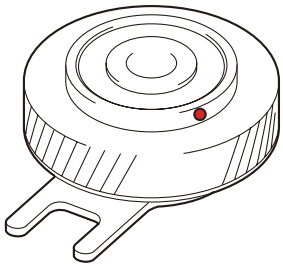

Fig. 3-3

Confidential

■ **Develop joint gear 37**

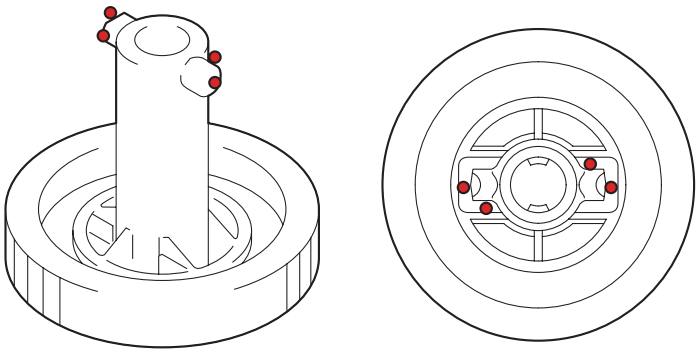

Fig. 3-4

■ **Document scanner unit**
<A4 model>

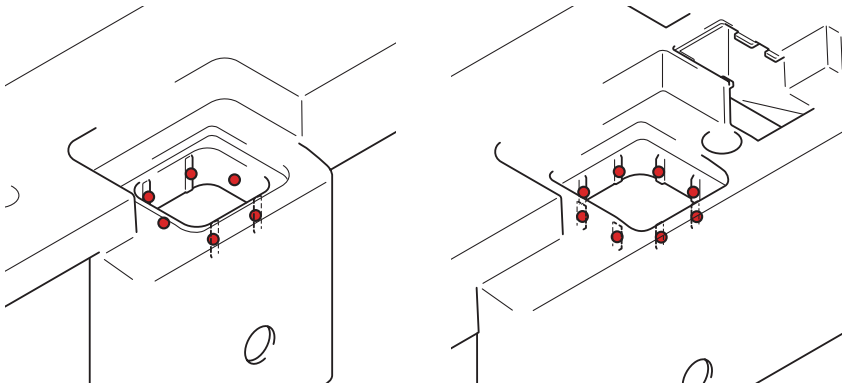

Fig. 3-5

<Legal model>

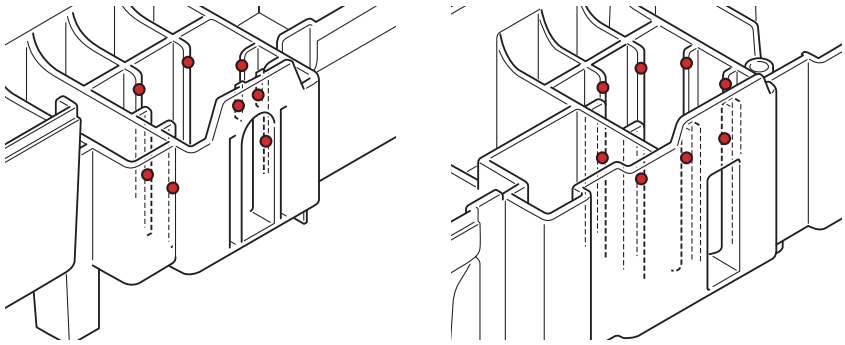

Fig. 3-6

Confidential

■ Hinge ASSY L

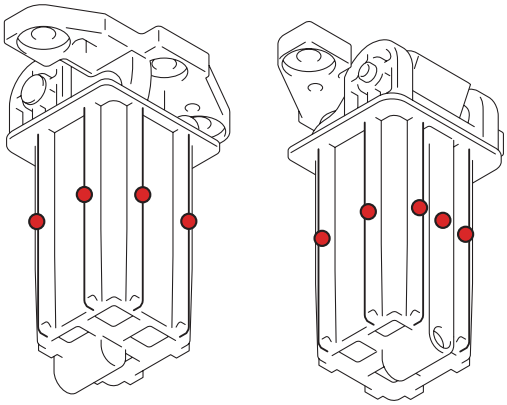

Fig. 3-7

■ Hinge R (Legal model only)

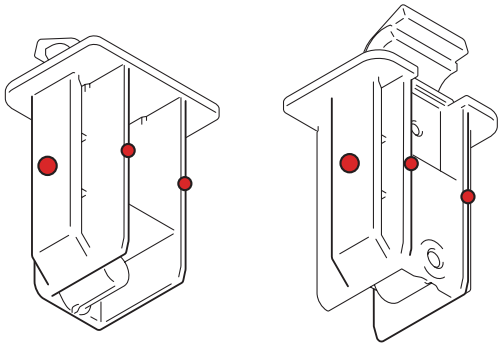

Fig. 3-8

6. OVERVIEW OF GEARS

<Layout view>

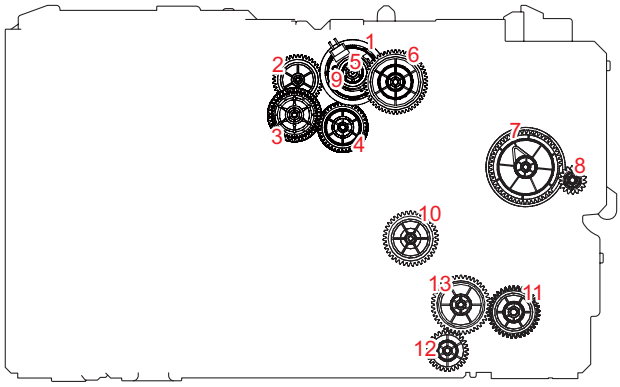

Fig. 3-9

<Development view>

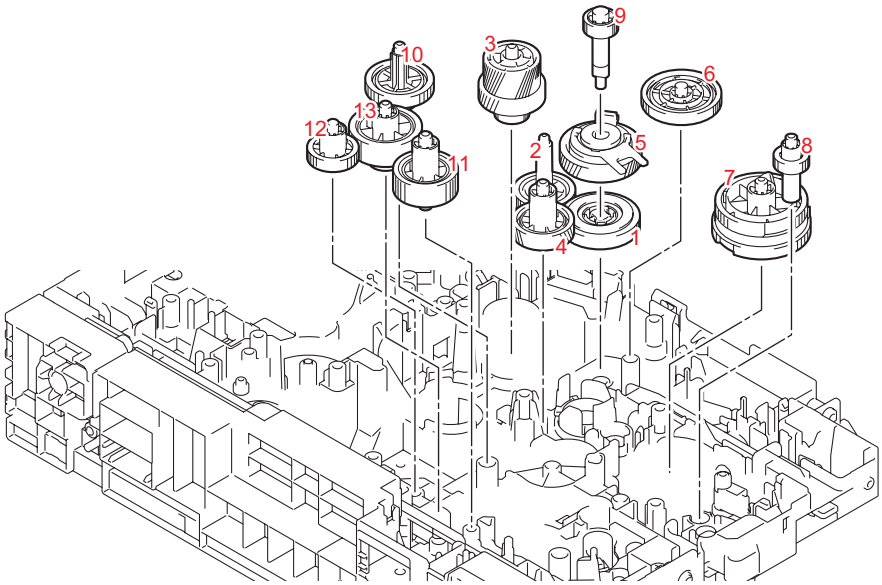

Fig. 3-10

Note:

- When handling gears, make sure that frame L faces up. Otherwise all gears come off.

<Name of gears>

1	LY4409	Develop one way clutch 53	8	LY4336	MP drive gear 18
2	LY4411	Develop low idle gear 41	9	LY4407	Develop shaft gear 22
3	LY4410	Develop gear 50R/42R/19	10	LY4412	Paper feed drive gear 39/17
4	LY4406	Develop high idle gear 39L			
5	LY4408	Develop clutch 51R	11	LY4403	T1 idle gear 37
6	LY4405	Develop idle gear 53	12	LY4398	LT drive gear 29
7	LY4394	MP sector gear 53/57	13	LY4404	T1 gear 19/42

* These parts are subject to change without notice.

<Layout view>

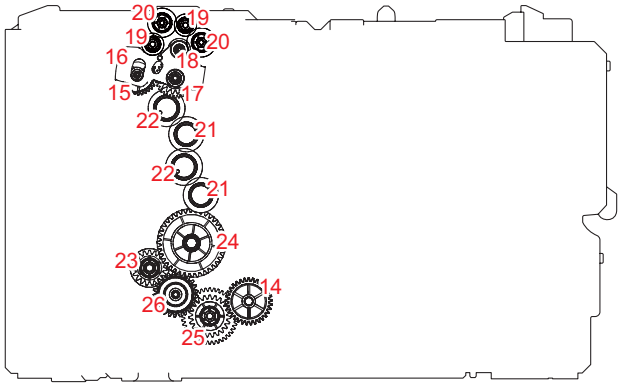

Fig. 3-11

<Development view>

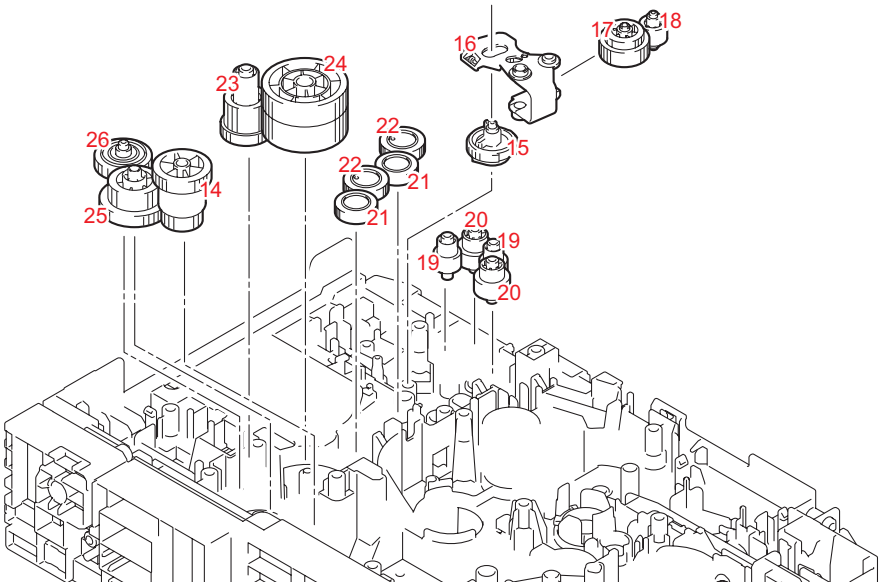

Fig. 3-12

Note:

- When handling gears, make sure that frame L faces up. Otherwise all gears come off.

<Name of gears>

14	LY4448	Fuser gear 22/33	21	LY4436	Eject idle gear 19
15	LY4438	Eject sector gear 33	22	LY4435	Eject idle gear 20
16	LY4444	Eject switch arm	23	LY4451	Duplex gear 27/19
17	LY4439	Eject gear 32/17	24	LY4450	Fuser drive gear 39
18	LY4442	Eject pendulum gear 17	25	LY4447	Fuser gear 23/40
19	LY4441	Eject idle gear 17	26	LY4449	Fuser pendulum gear 25
20	LY4440	Eject idle gear 23			

* These parts are subject to change without notice.

7. HARNESS ROUTING

1 Main PCB ASSY

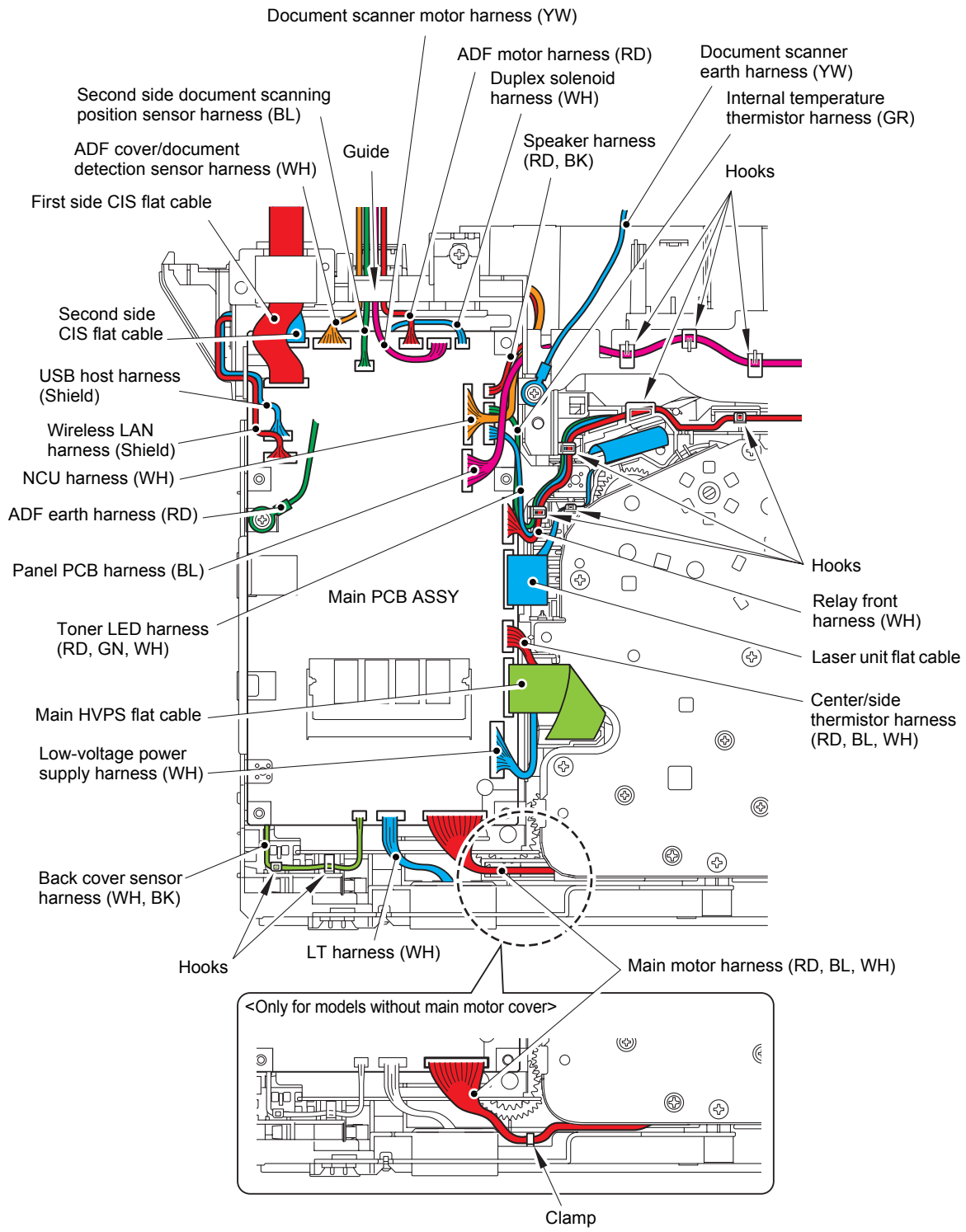

Harness colors may be changed for any reason.

2 Relay front PCB ASSY

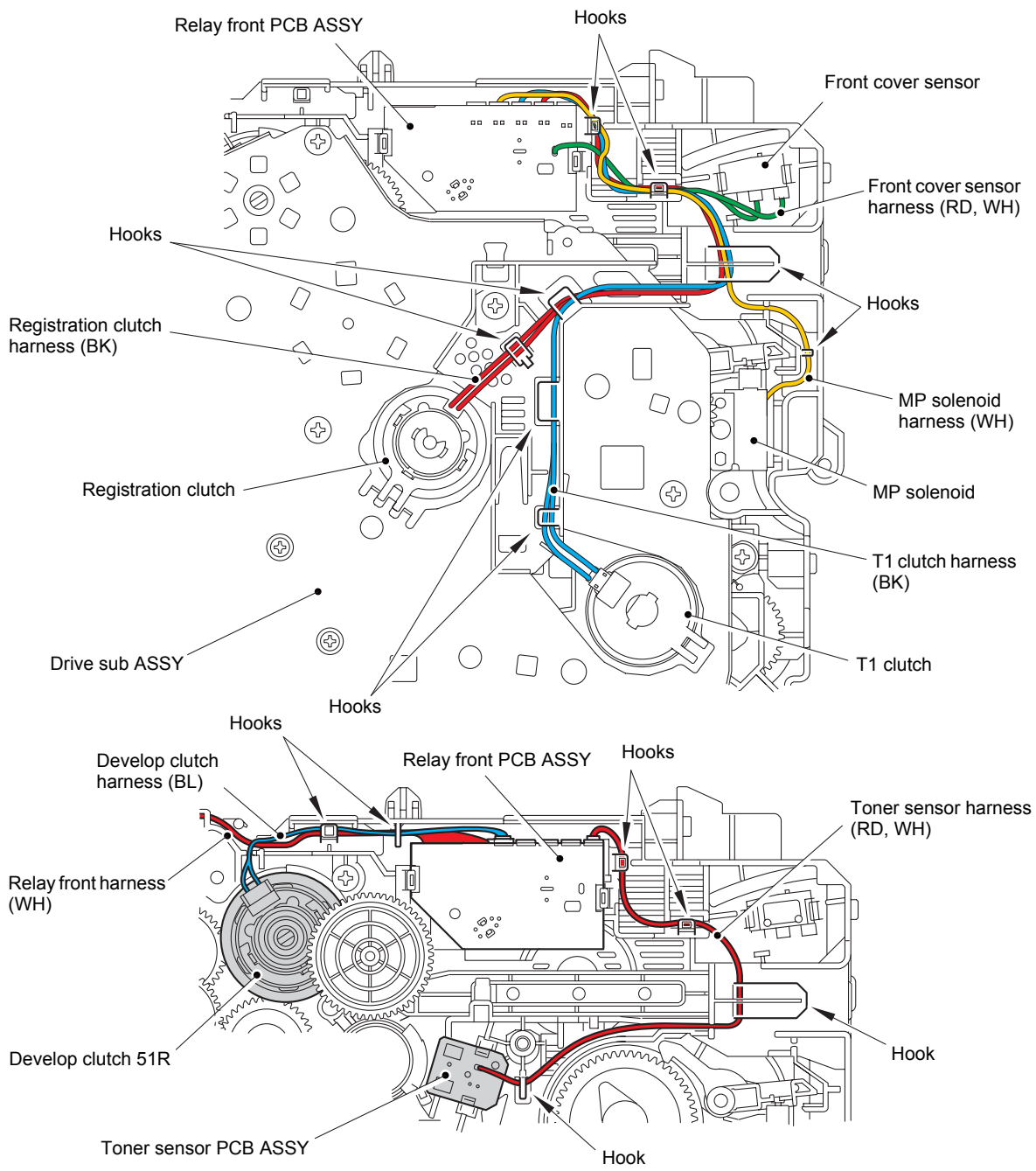

Harness colors may be changed for any reason.

3 Fuser unit

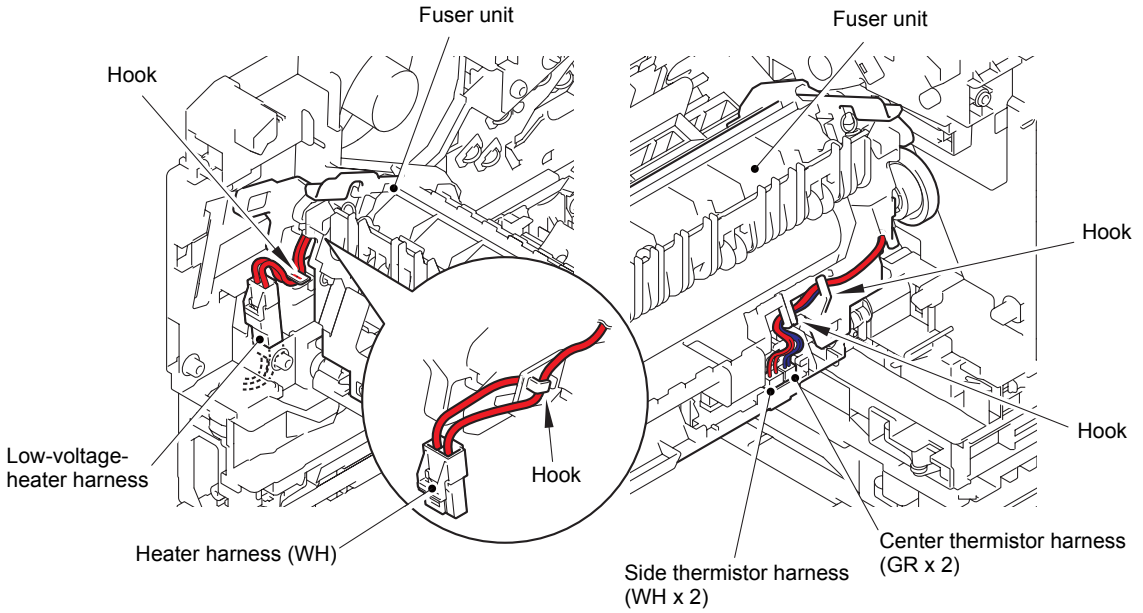

4 High-voltage power supply PCB ASSY

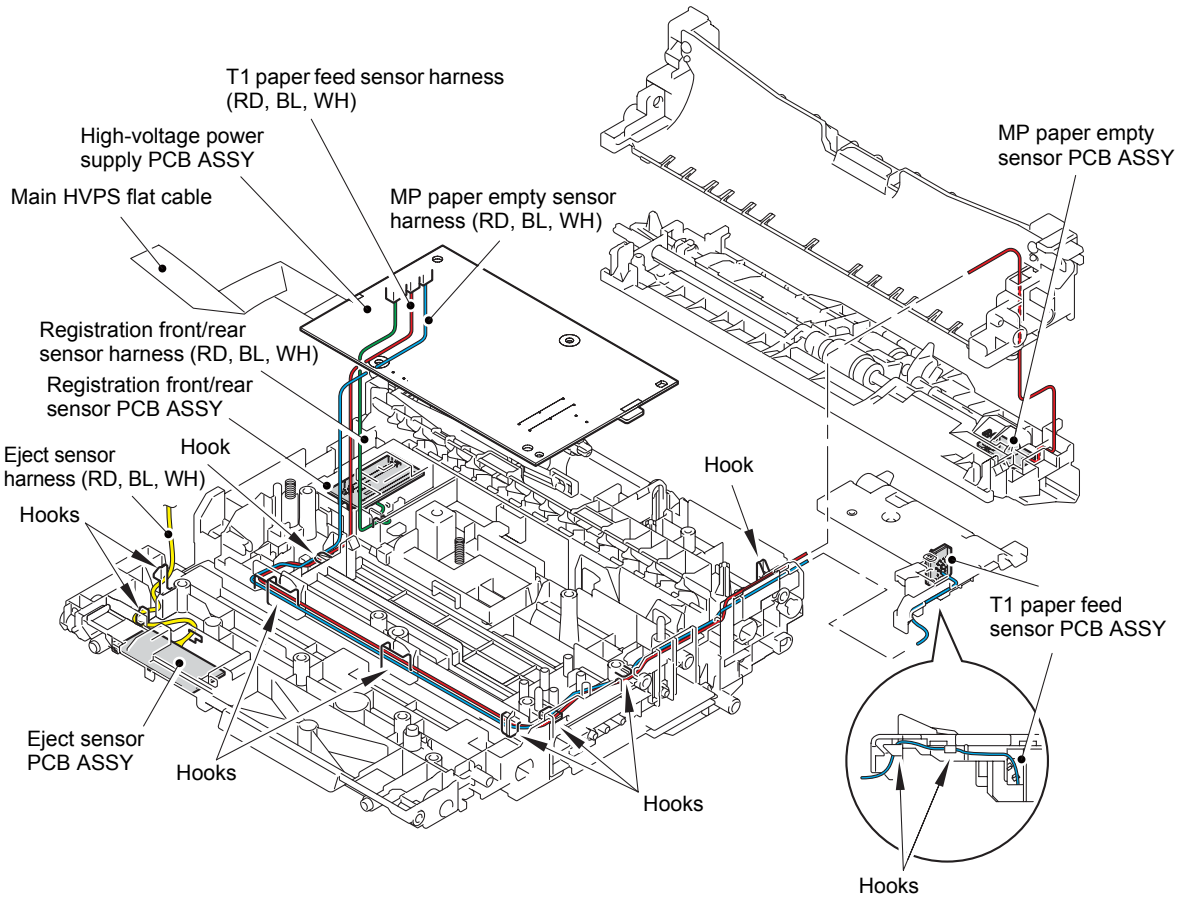

Harness colors may be changed for any reason.

5 Toner LED PCB ASSY/Main fan

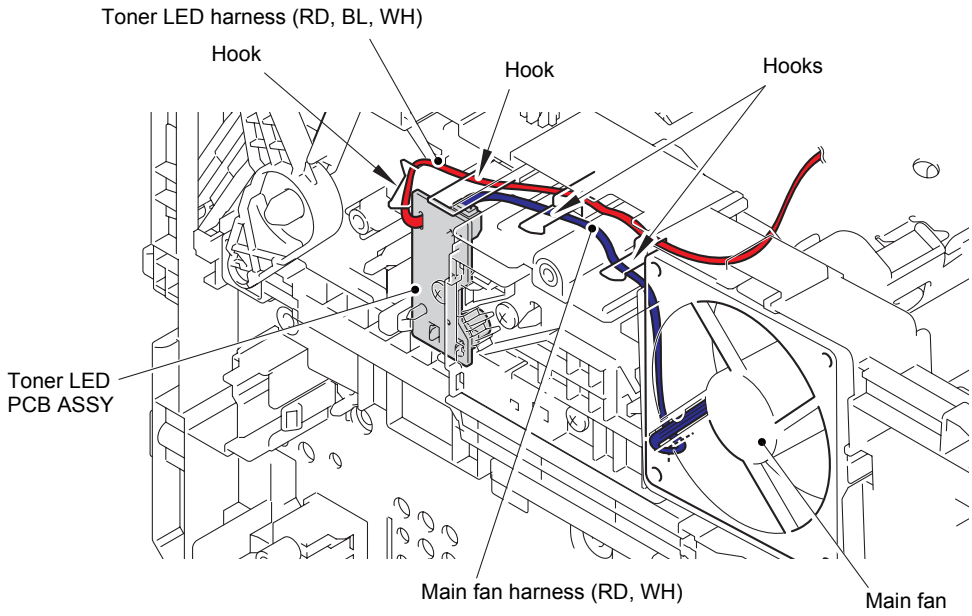

6 Laser unit

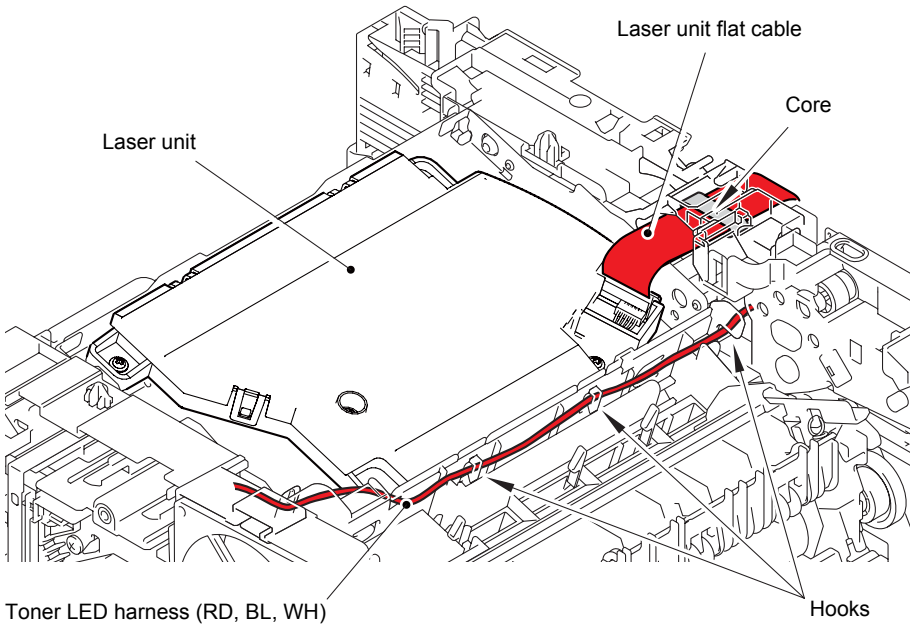

Harness colors may be changed for any reason.

Confidential

7 Low-voltage power supply PCB ASSY

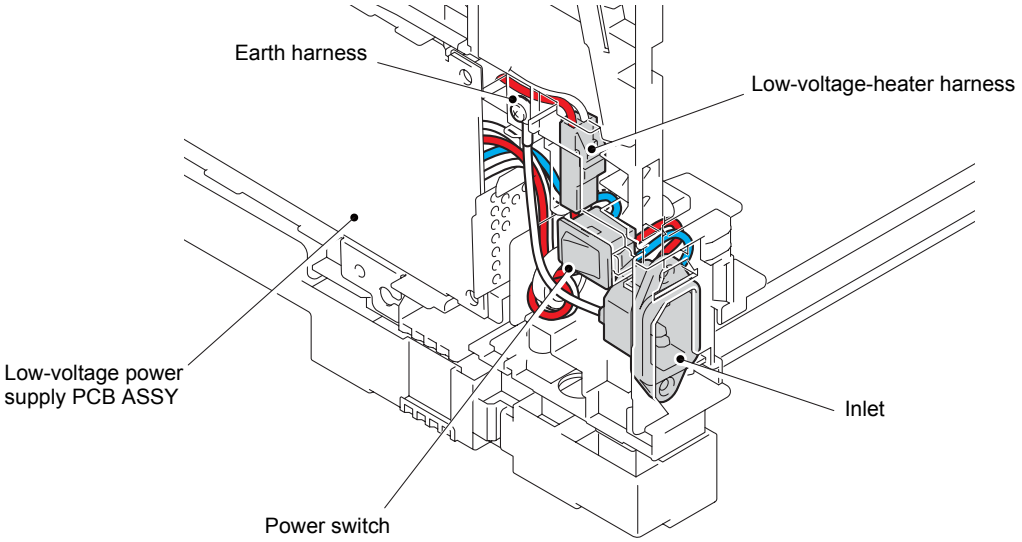

Note:

- Attach the Earth harness outermost over the heater harness.

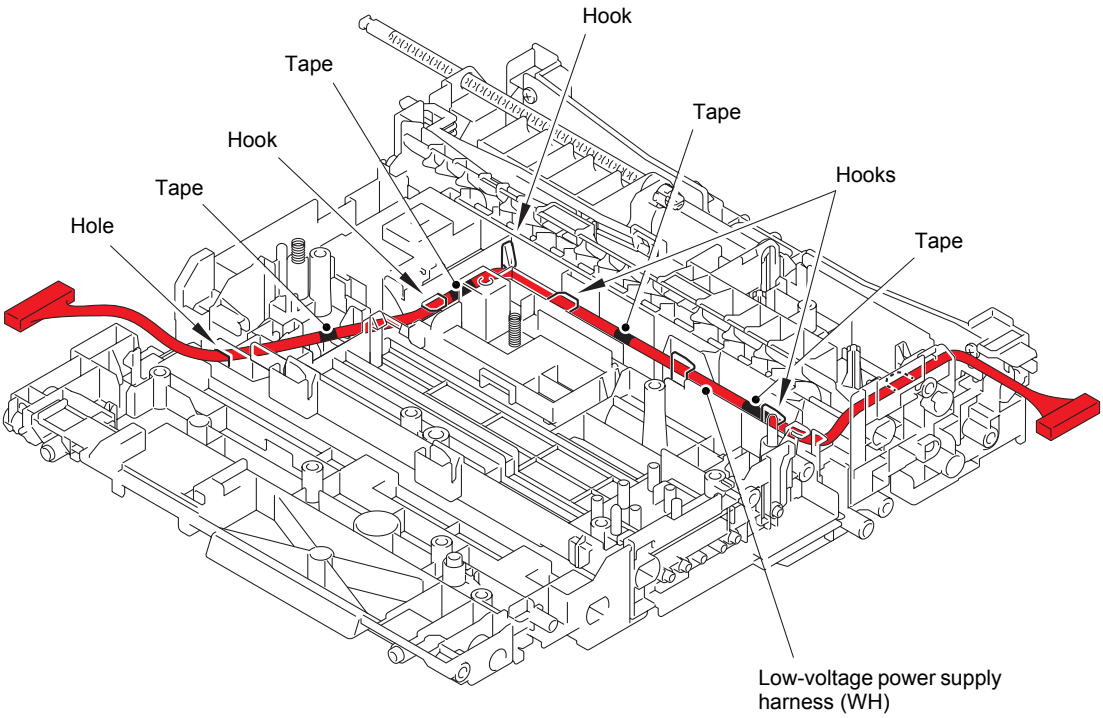

Harness colors may be changed for any reason.

8 NCU PCB ASSY / Speaker unit

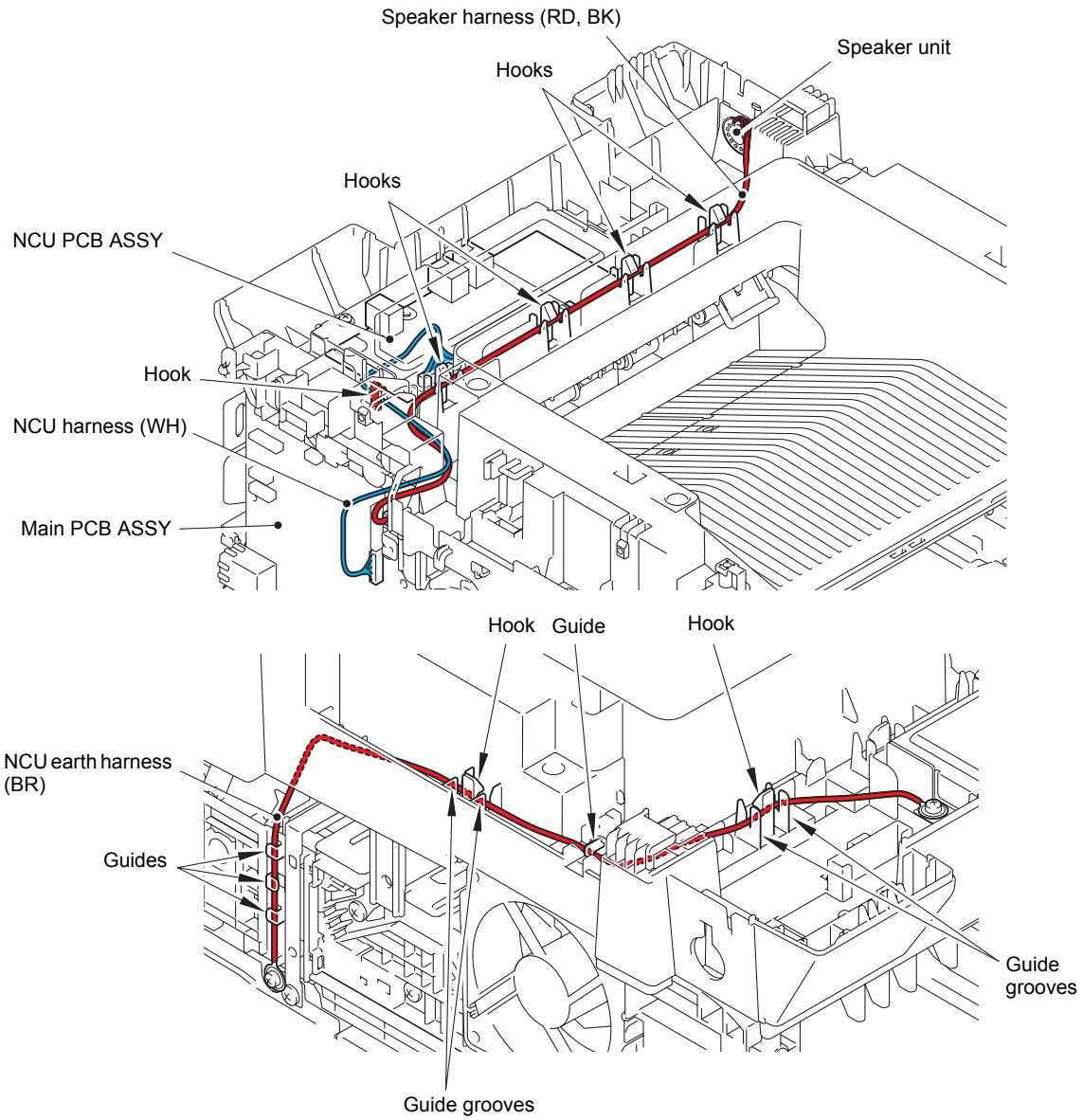

Harness colors may be changed for any reason.

9 Wireless LAN PCB ASSY / USB host PCB ASSY

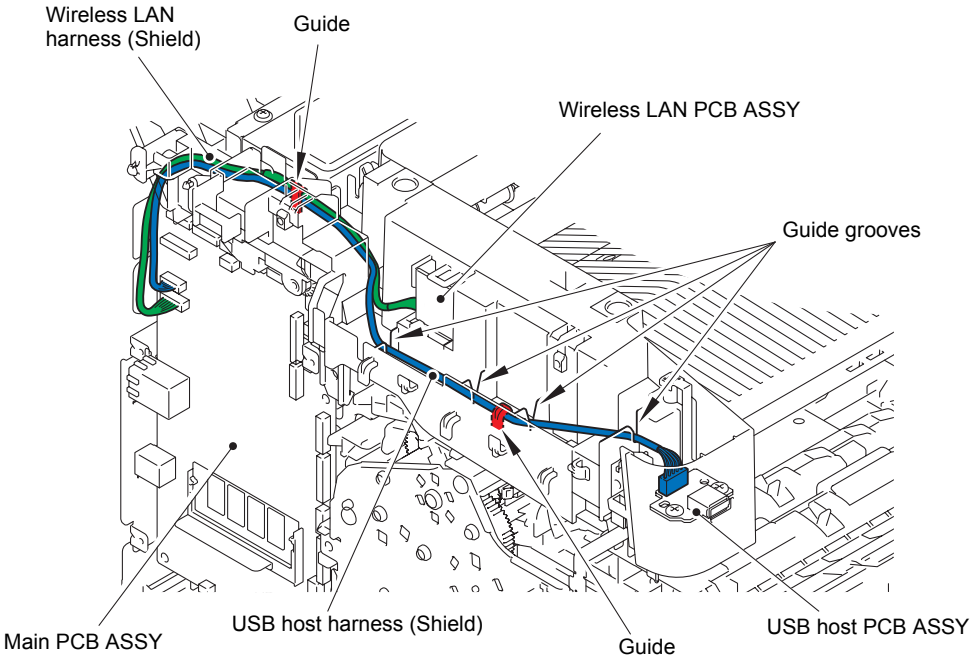

10 Panel PCB ASSY

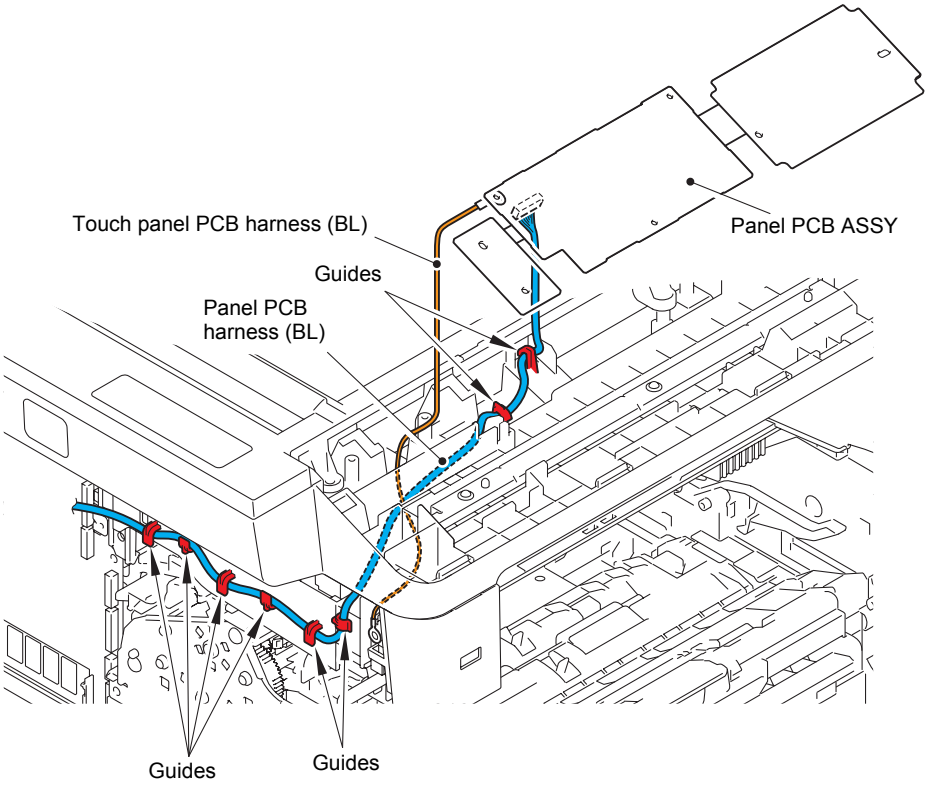

Harness colors may be changed for any reason.

Confidential

11	Main frame R

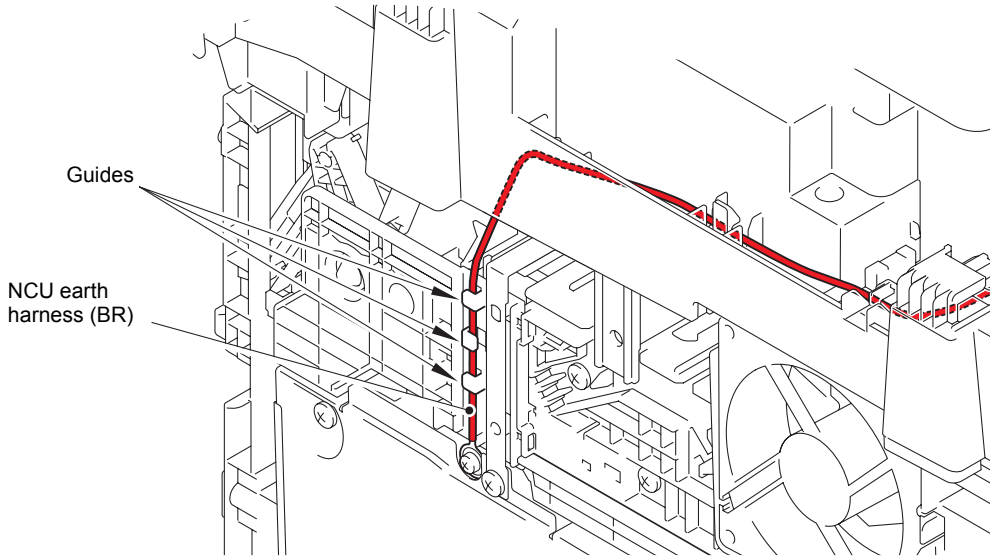

Harness colors may be changed for any reason.

Confidential

8. DISASSEMBLY FLOW CHART

Disassembly / Re-Assembly (second)

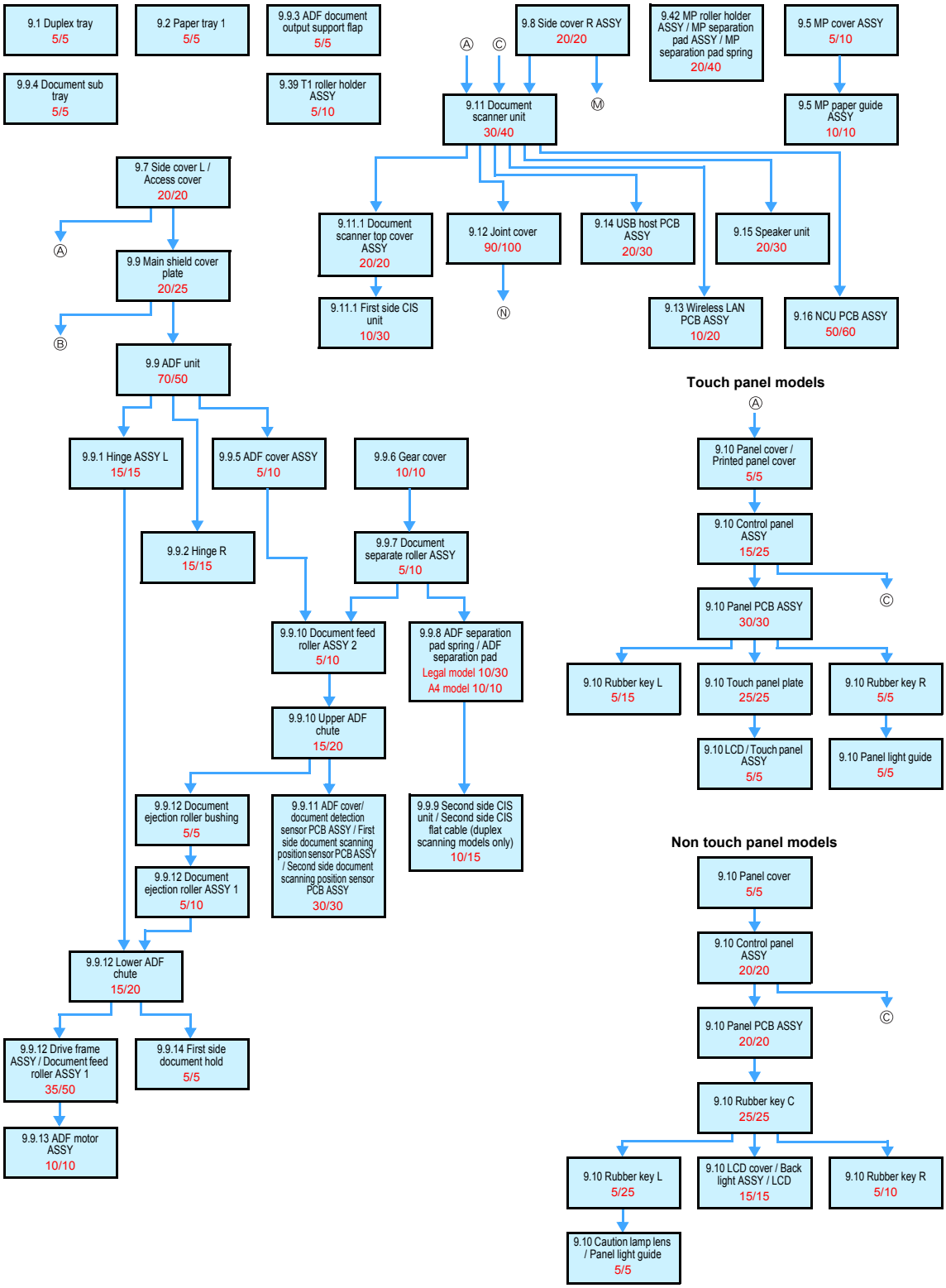

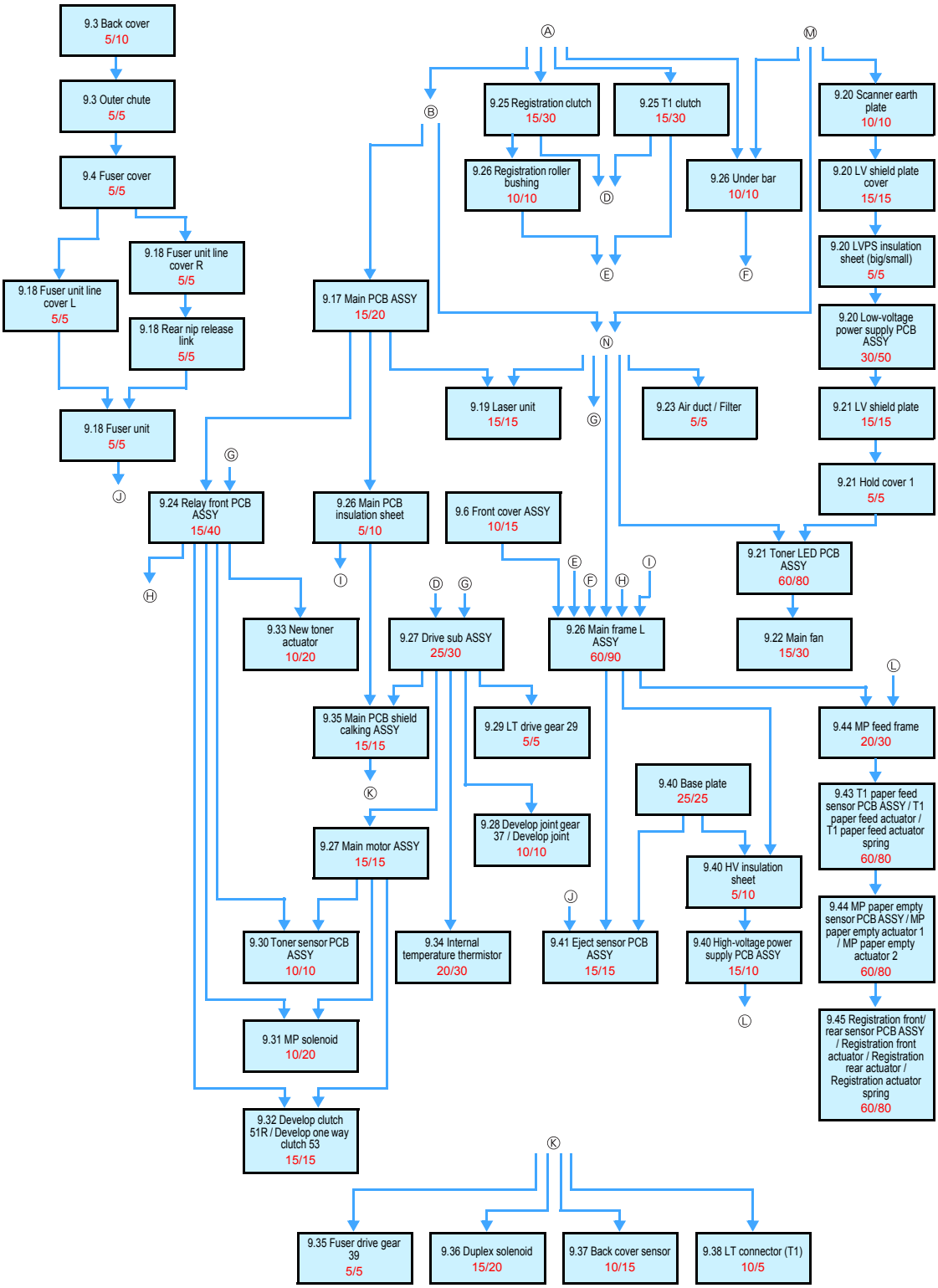
9.3 Back cover 5/10
9.3 Outer chute 5/5
9.4 Fuser cover 5/5
9.18 Fuser unit line cover L 5/5
9.18 Fuser unit line cover R 5/5
9.18 Rear nip release link 5/5
9.18 Fuser unit 5/5
Ⓐ
Ⓜ
Ⓑ
9.25 Registration clutch 15/30
9.25 T1 clutch 15/30
9.20 Scanner earth plate 10/10
9.26 Registration roller bushing 10/10
Ⓓ
9.26 Under bar 10/10
9.20 LV shield plate cover 15/15
Ⓔ
Ⓕ
9.20 LVPS insulation sheet (big/small) 5/5
9.17 Main PCB ASSY 15/20
Ⓝ
9.20 Low-voltage power supply PCB ASSY 30/50
9.19 Laser unit 15/15
Ⓖ
9.23 Air duct / Filter 5/5
9.21 LV shield plate 15/15
Ⓖ
Ⓙ
9.24 Relay front PCB ASSY 15/40
9.26 Main PCB insulation sheet 5/10
9.6 Front cover ASSY 10/15
9.21 Hold cover 1 5/5
Ⓗ
Ⓘ
Ⓔ
Ⓕ
Ⓗ
Ⓘ
9.21 Toner LED PCB ASSY 60/80
Ⓓ
Ⓖ
9.33 New toner actuator 10/20
9.27 Drive sub ASSY 25/30
9.26 Main frame L ASSY 60/90
9.22 Main fan 15/30
Ⓛ
9.35 Main PCB shield calking ASSY 15/15
9.29 LT drive gear 29 5/5
9.44 MP feed frame 20/30
Ⓚ
9.40 Base plate 25/25
9.43 T1 paper feed sensor PCB ASSY / T1 paper feed actuator / T1 paper feed actuator spring 60/80
9.28 Develop joint gear 37 / Develop joint 10/10
9.27 Main motor ASSY 15/15
9.40 HV insulation sheet 5/10
Ⓙ
9.44 MP paper empty sensor PCB ASSY / MP paper empty actuator 1 / MP paper empty actuator 2 60/80
9.30 Toner sensor PCB ASSY 10/10
9.34 Internal temperature thermistor 20/30
9.41 Eject sensor PCB ASSY 15/15
9.40 High-voltage power supply PCB ASSY 15/10
Ⓛ
9.31 MP solenoid 10/20
9.45 Registration front/ rear sensor PCB ASSY / Registration front actuator / Registration rear actuator / Registration actuator spring 60/80
9.32 Develop clutch 51R / Develop one way clutch 53 15/15
Ⓚ
9.35 Fuser drive gear 39 5/5
9.36 Duplex solenoid 15/20
9.37 Back cover sensor 10/15
9.38 LT connector (T1) 10/5

9. DISASSEMBLY PROCEDURE

9.1 Preparation

■ Disconnecting Cables and Removing Accessories

Prior to proceeding with the disassembly procedure,

(1) Disconnect the following:
- AC cord
- USB cable (if connected)
- LAN cable (if connected)
- Line cord (if connected)

(2) Remove the following:
- Paper tray 1
- Toner cartridge and drum unit
- Duplex tray
- LAN port cap

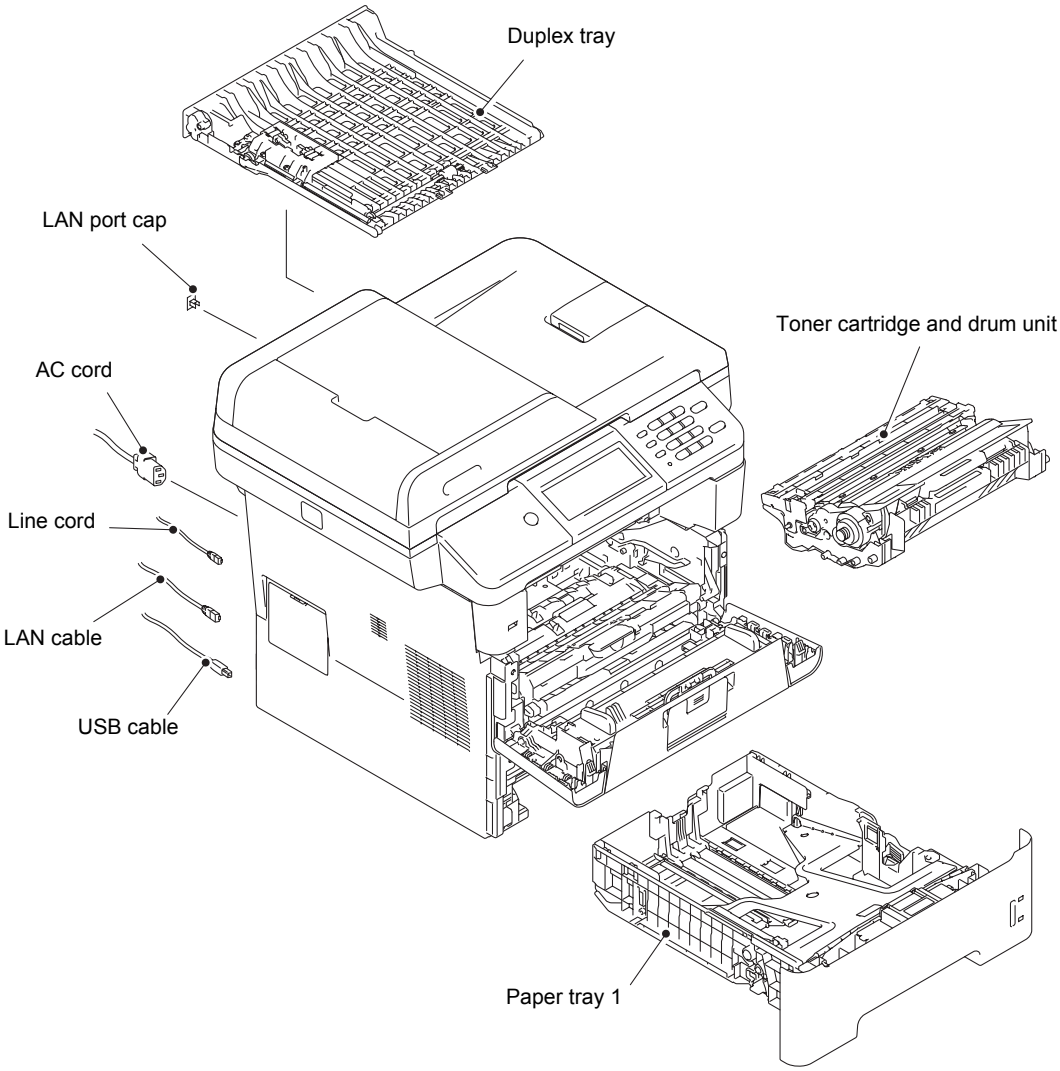

Fig. 3-13

9.2 Paper tray 1

Note:
- Paper tray 1 (250 sheets, 500 sheets): T1, Paper tray 2 (500 sheets): T2
- The illustration shows paper tray 1 (500 sheets).

(1) Remove the two taptite bind B M4x12 screws from the paper tray 1.

(2) Lift the plate to remove "A" on the T1 tray indicator from the plate, remove the four bosses, and then remove the T1 tray cover from the paper tray 1.

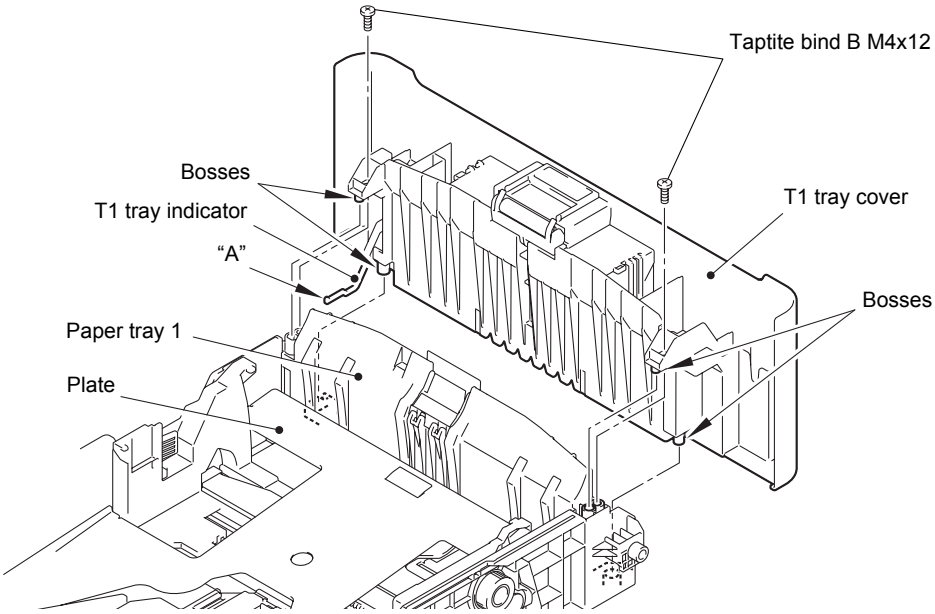

Fig. 3-14

(3) Release the two hooks on the T1 separation pad ASSY from the paper tray 1.

(4) Push both arms of the T1 separation pad ASSY in the direction of the arrows to remove both pins, and then remove the T1 separation pad ASSY from the paper tray 1.

(5) Remove the T1 separation pad spring from the T1 separation pad ASSY.

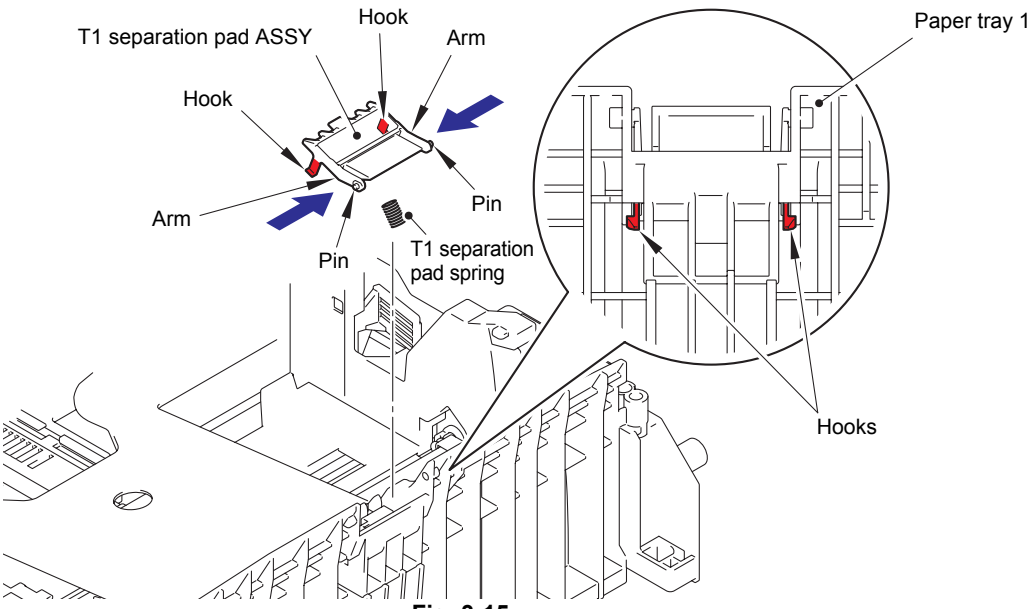

Fig. 3-15

Confidential

(6) Push the hook on the lift gear Z27M10 (or lift gear Z48M10) while lifting the plate-up plate, and remove the lift gear Z27M10 (or lift gear Z48M10) from the paper tray 1.
250 sheets: Lift gear Z27M10
500 sheets: Lift gear Z48M10

(7) Remove the gear Z22M10 and the idle gear Z18M10 from the paper tray 1.

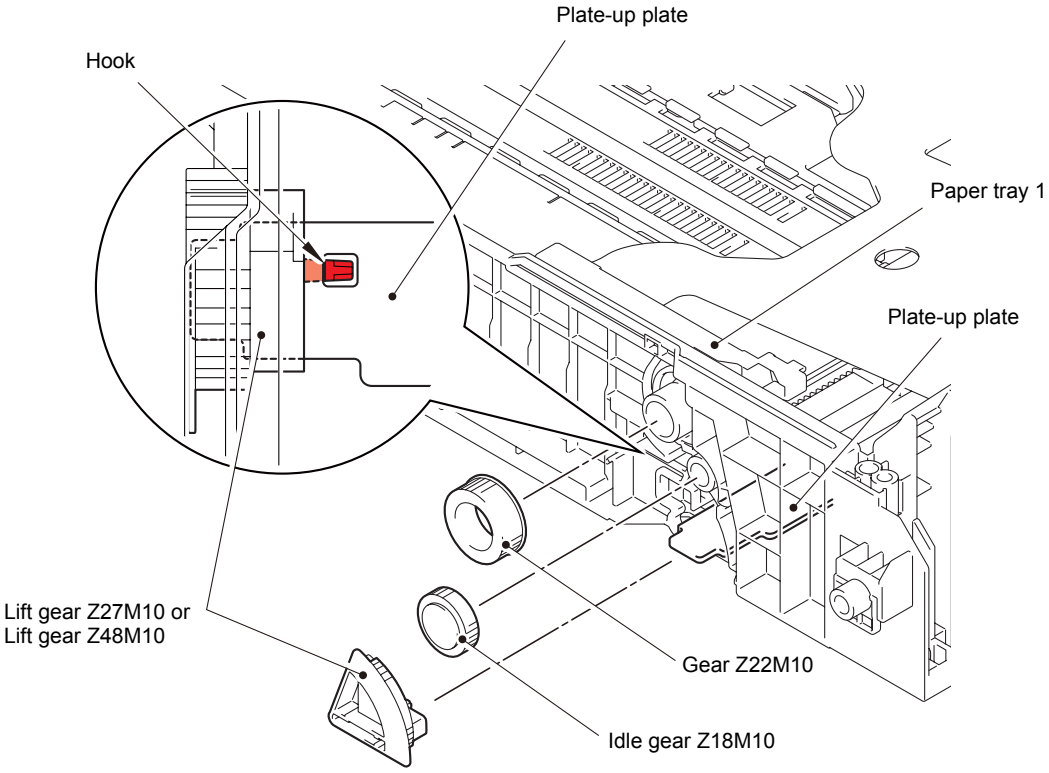

Fig. 3-16

9.3 Back cover / Outer chute

(1) Open the back cover.

(2) Push both ribs of the back cover in the direction of the arrows, and remove the two bosses on the outer chute.

Note:
- Be careful not to damage the ribs inside the back cover.

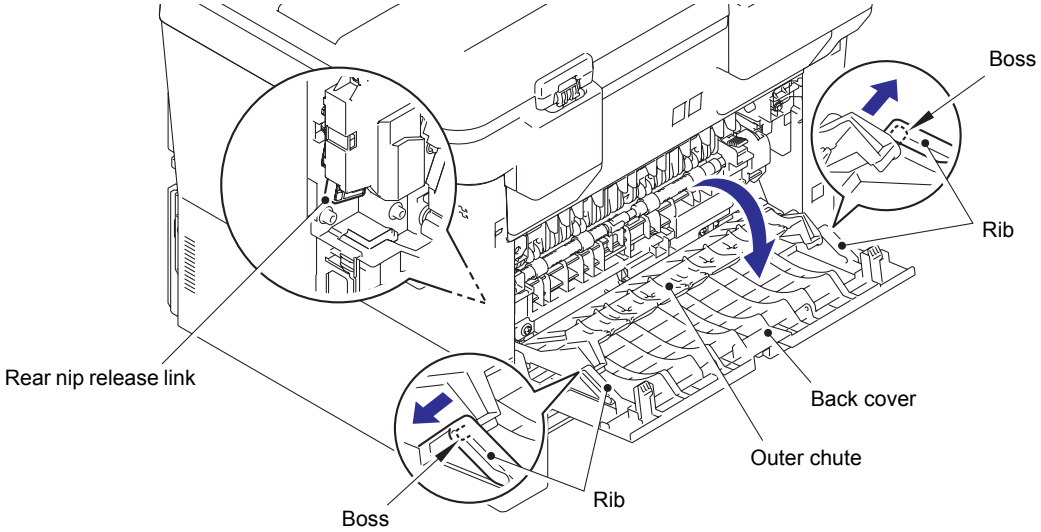

Fig. 3-17

Assembling Note:
- When attaching the back cover, open the front cover and attach the back cover while lifting the rear nip release link.

(3) Remove the back cover from boss A on the machine, and remove the back cover from the machine.

(4) Open the outer chute approximately 80 degrees. Remove the outer chute from boss B on the right side of the machine, and remove the outer chute from the machine in the direction of the arrow.

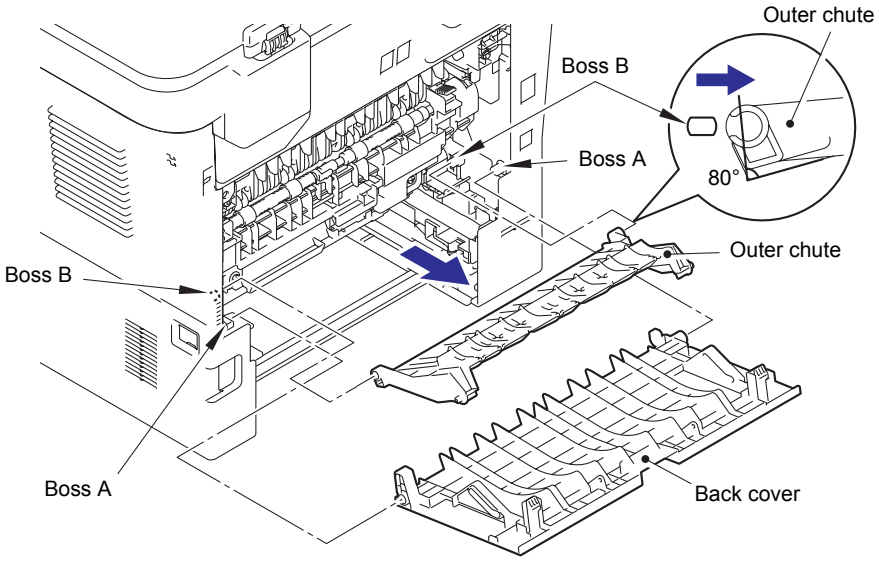

Fig. 3-18

Confidential

9.4 Fuser cover

(1) Push the two knobs on the fuser cover, and pull the fuser cover down in the direction of the arrow.

(2) Remove the fuser cover from the bosses on the fuser unit, and remove the fuser cover from the machine.

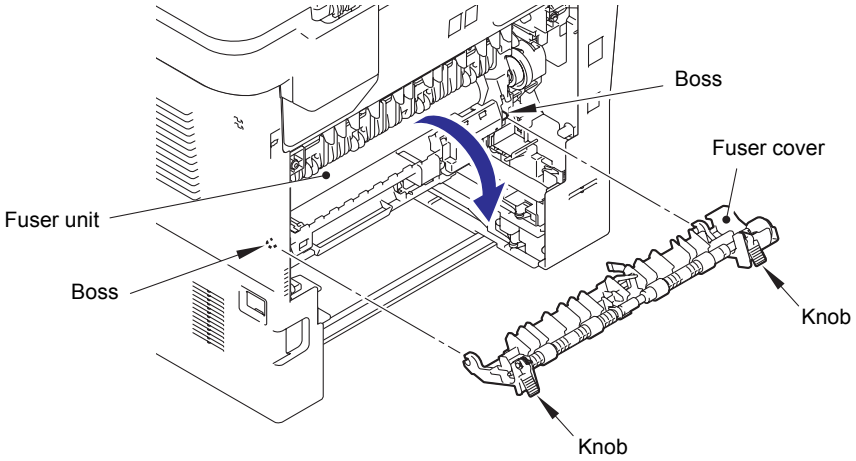

Fig. 3-19

Confidential

9.5 MP cover ASSY

(1) Open the MP cover ASSY.

(2) Remove the two hooks on the MP paper guide ASSY from the two bosses on the front cover ASSY.

Note:
- When removing the MP paper guide ASSY from the bosses on the front cover ASSY, pull it out strongly in the direction of arrow 2.

(3) Remove the two bosses on the MP cover ASSY, and remove the MP cover ASSY from the front cover ASSY.

Note:
- Remove the MP cover ASSY while pushing "A" on the front cover ASSY in the direction of arrow 3.

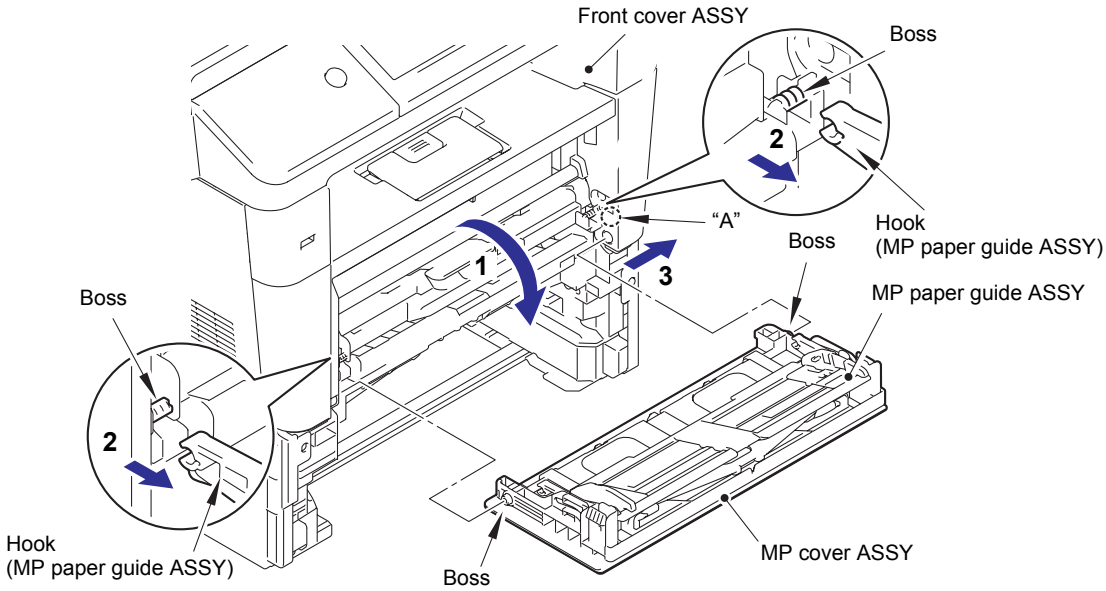

Fig. 3-20

(4) Slide the left side of the MP paper guide ASSY in the direction of arrow 4, remove boss B from the guide on the MP cover ASSY, and then remove the MP paper guide ASSY from the MP cover ASSY.

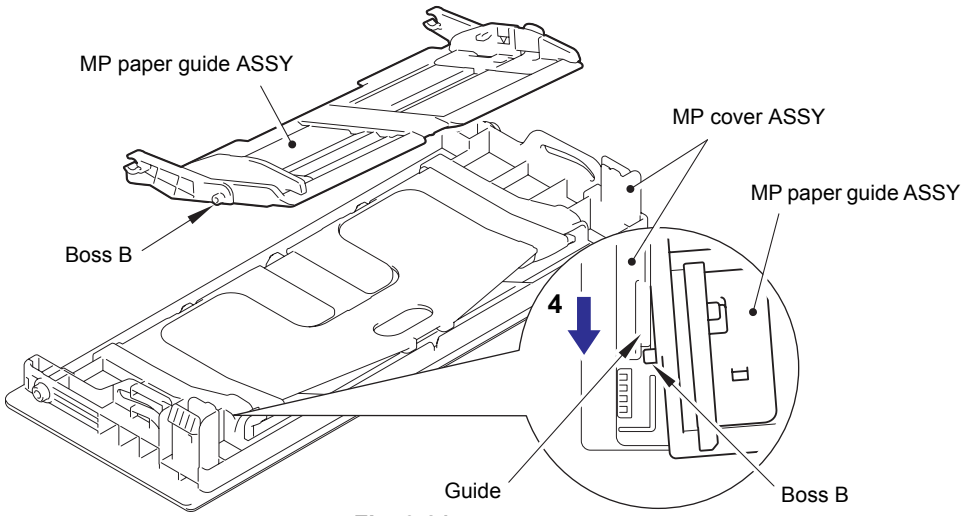

Fig. 3-21

9.6 Front cover ASSY

(1) Push the front cover release button, and open the front cover ASSY.

(2) Release the two hooks, and remove the develop joint link from the front cover ASSY.

(3) Release the hook, and remove the nip release link from the front cover ASSY.

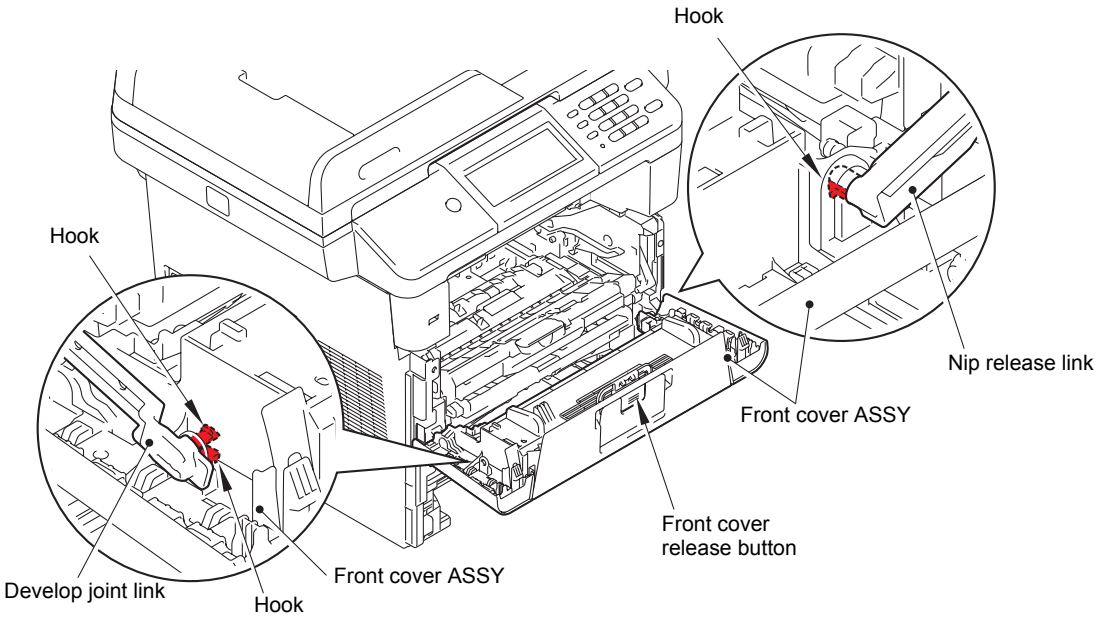

Fig. 3-22

(4) Remove the front cover ASSY from the two bosses of the machine.

Note:

- When removing the front cover ASSY, push "A" on the front cover ASSY in the direction of arrow 4a, and slide the front cover ASSY in the direction of arrow 4b to remove it.

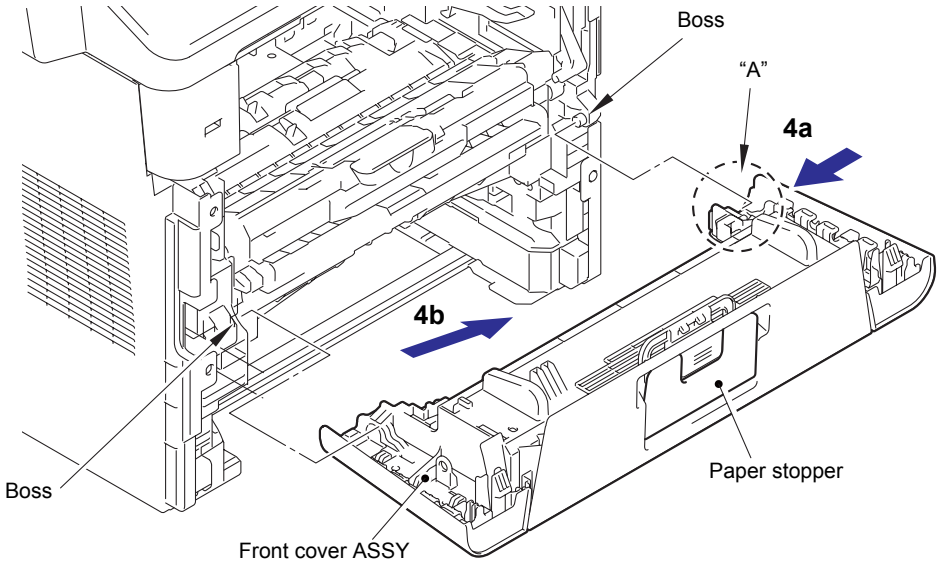

Fig. 3-23

(5) Remove the paper stopper from the two bosses of the front cover ASSY.

9.7 Side cover L / Access cover

(1) Remove the taptite bind B M4x12 screw from the front side of the side cover L.

(2) Remove the taptite bind B M4x12 screw from the back side of the side cover L.

(3) Keep the two front hooks held down, and rotate the side cover L in the direction of arrow 3b while pushing it in the direction of arrow 3a. Release the remaining six hooks, and remove the side cover L from the machine.

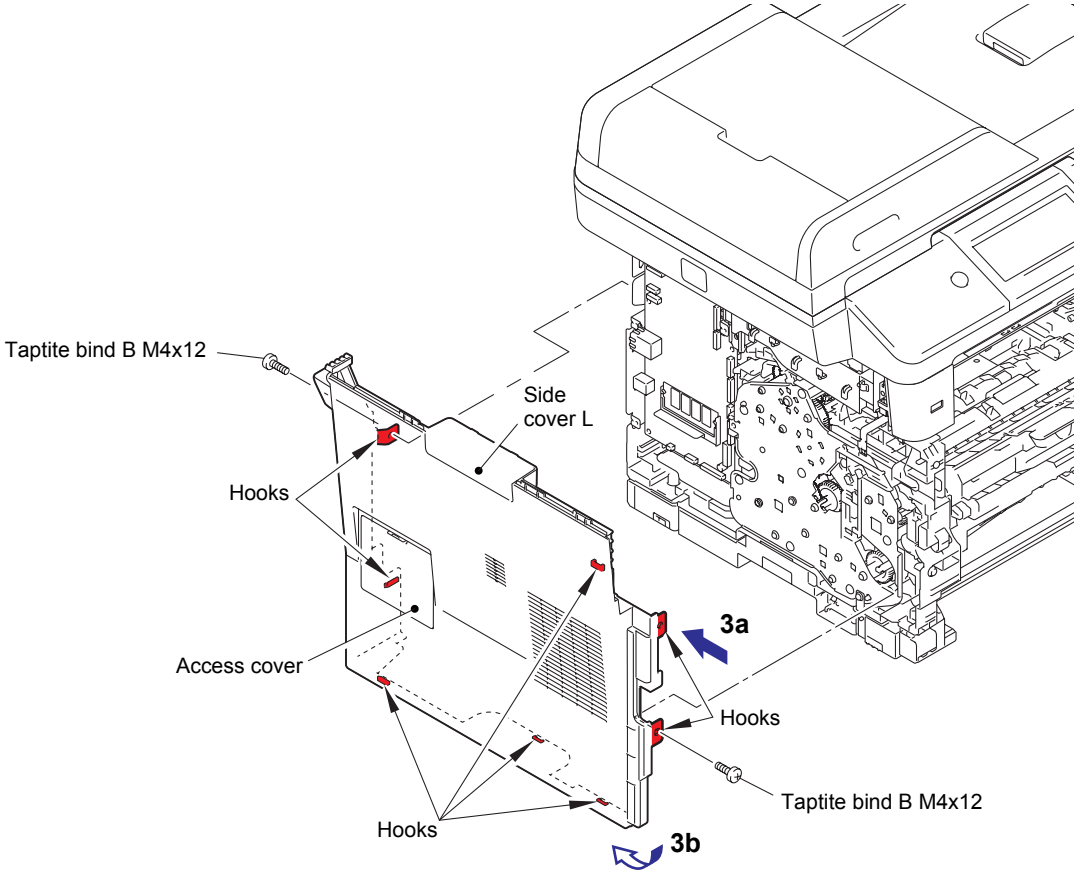

Fig. 3-24

(4) Release the hook, and remove the access cover from the side cover L.

9.8 Side cover R ASSY

(1) Remove the taptite bind B M4x12 screw from the front side of the side cover R ASSY.

(2) Remove the taptite bind B M4x12 screw from the back side of the side cover R ASSY.

(3) Keep the two front hooks held down, and rotate the side cover R ASSY in the direction of arrow 3b while pushing it in the direction of arrow 3a. Release the remaining seven hooks, and remove the side cover R ASSY from the machine.

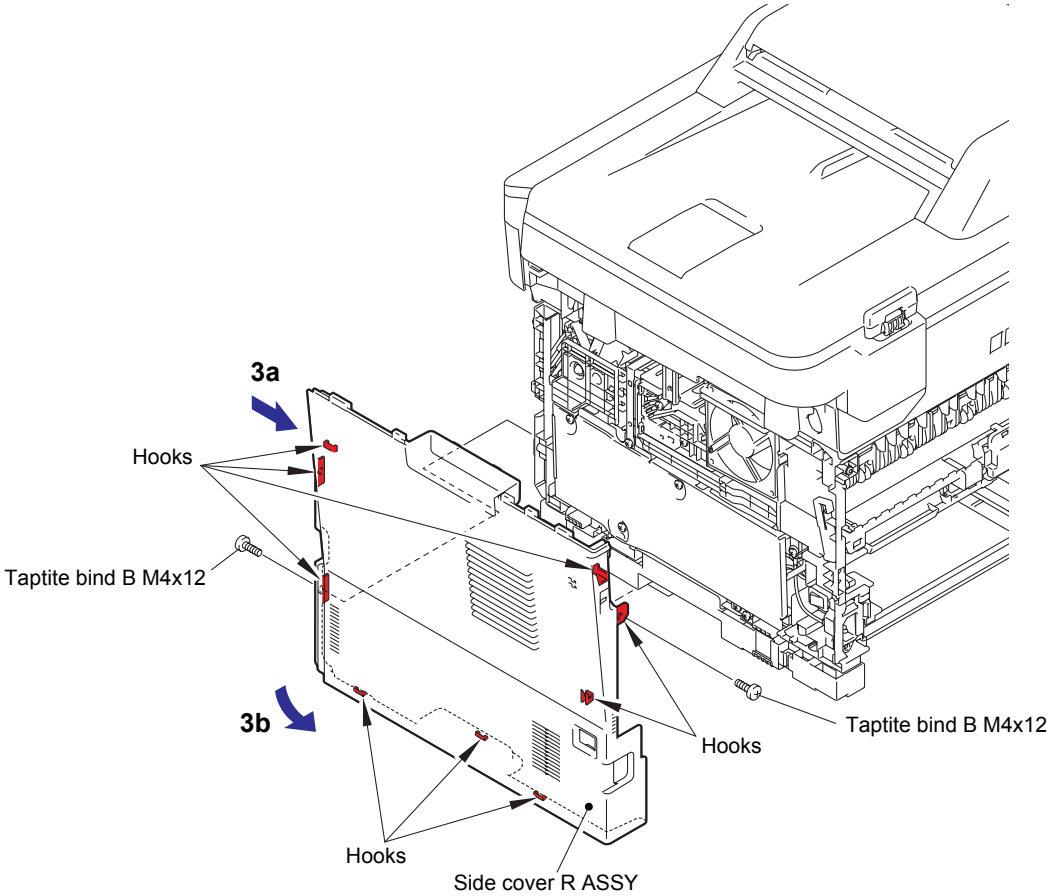

Fig. 3-25

9.9 ADF unit

(1) Remove the four taptite cup S M3x8 SR screws to remove the ADF earth harness, document scanner earth harness, and main shield cover plate from the machine.
The main shield cover plate is not provided for models with a tray capacity of 500 sheets. Therefore, remove the screw securing the ADF earth harness, the screw securing the document scanner earth harness, and screw A.

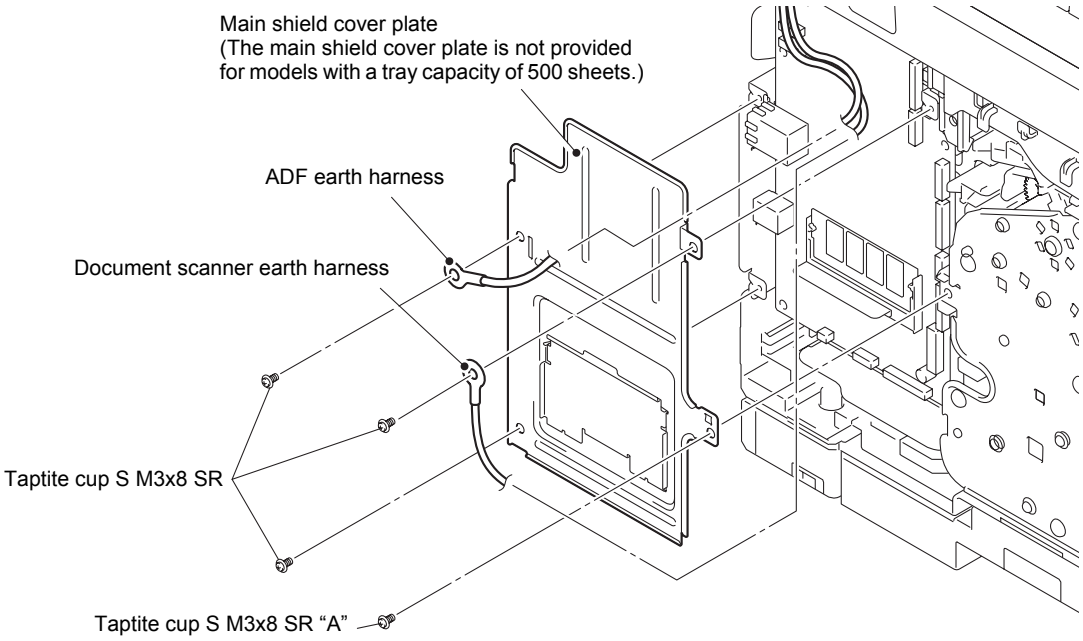

Fig. 3-26

(2) Disconnect the second side CIS flat cable, first side CIS flat cable, ADF cover/document detection sensor harness, second side document scanning position sensor harness, and ADF motor harness from the main PCB ASSY, and release these harnesses from the securing fixtures.

(3) Remove the core holder from the two pins on the machine, and pull out the core holder from the second side CIS flat cable and first side CIS flat cable .

Note:
- The second side CIS flat cable and the second side document scanning position sensor harness are provided for duplex scanning models only.

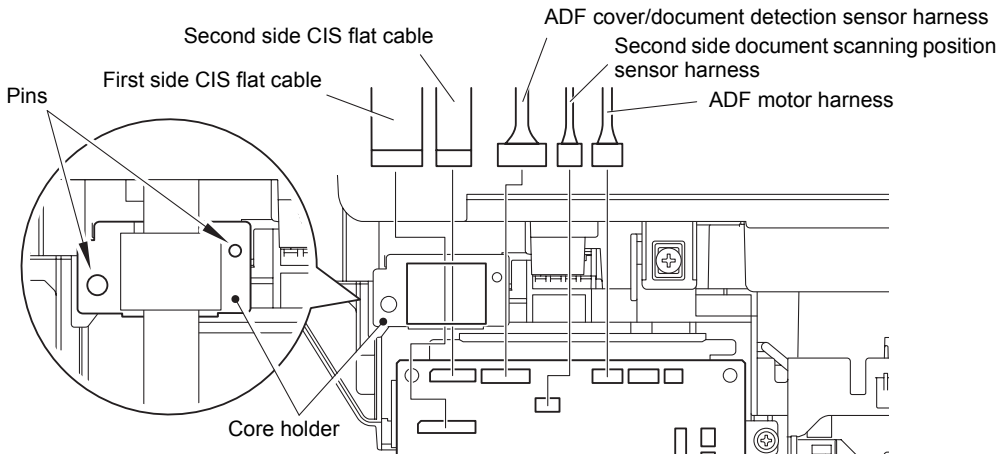

Fig. 3-27

Harness routing: Refer to "1.Main PCB ASSY".

(4) Remove the two taptite bind B M4x12 screws on the back of the ADF unit.

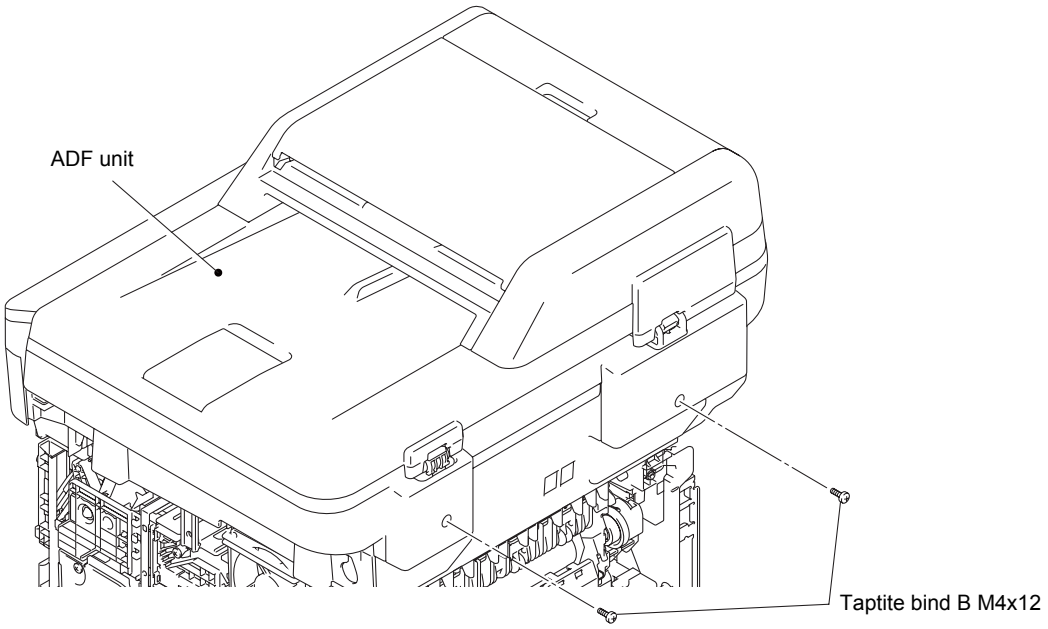

Fig. 3-28

(5) Open the ADF unit. While lifting the hinge ASSY L slightly, release the hook on the FFC holder ASSY, and slide it in the direction of the arrow to release the two ribs. Then remove the FFC holder ASSY from the document scanner unit.

(6) Remove the ADF unit from the document scanner unit, and pull out the ADF motor harness and the second side CIS flat cable from the document scanner unit.

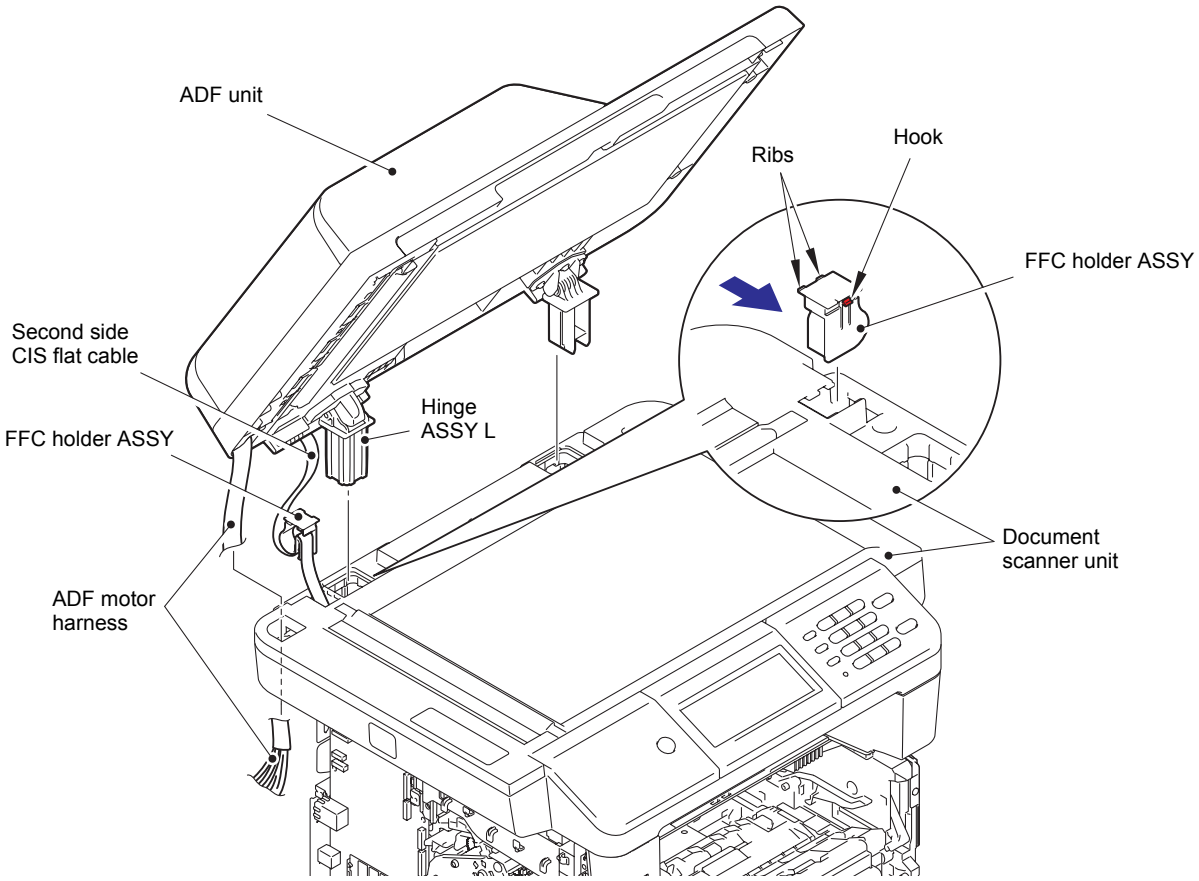

Fig. 3-29

9.9.1 Hinge ASSY L

(1) Reverse the ADF unit.

(2) Remove the three taptite cup S M3x12 screws to remove the hinge ASSY L from the ADF unit.

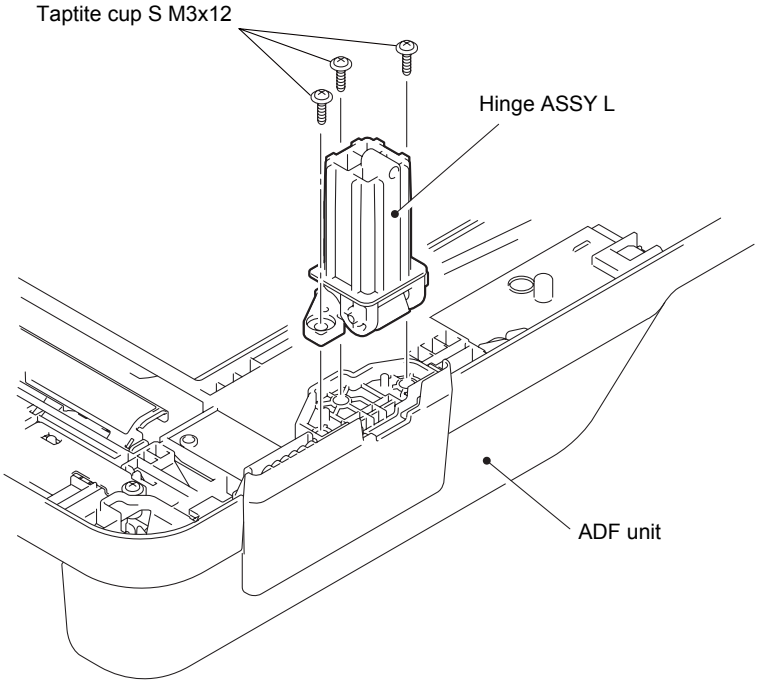

Fig. 3-30

9.9.2 Hinge R

(1) Remove the taptite cup B M3x10 screw to remove the hinge R and the hinge support R from the ADF unit.

(2) Remove the three taptite cup B M3x10 screws to remove the hinge arm R from the ADF unit.

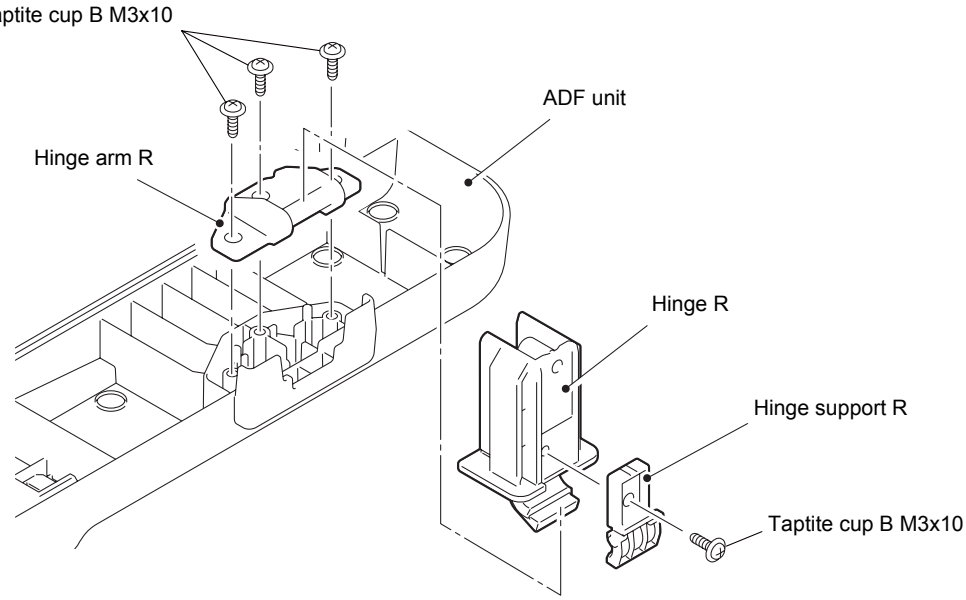

Fig. 3-31

9.9.3 ADF document output support flap

(1) Reverse the ADF unit.

(2) Release the two bosses, and remove the ADF document output support flap from the ADF unit.

9.9.4 Document sub tray

(1) Open the document sub tray.

(2) Release the two bosses, and remove the document sub tray from the ADF unit.

9.9.5 ADF cover ASSY

(1) Open the ADF cover ASSY.

(2) Release the two bosses, and remove the ADF cover ASSY from the ADF unit.

(3) Push the arm of the ADF cover ASSY in the direction of arrow 3a to release boss A from the arm of the second side document hold. Slide the second side document hold in the direction of arrow 3b to release it from boss B. Remove the second side document hold from the ADF cover ASSY. (Duplex scanning models only)

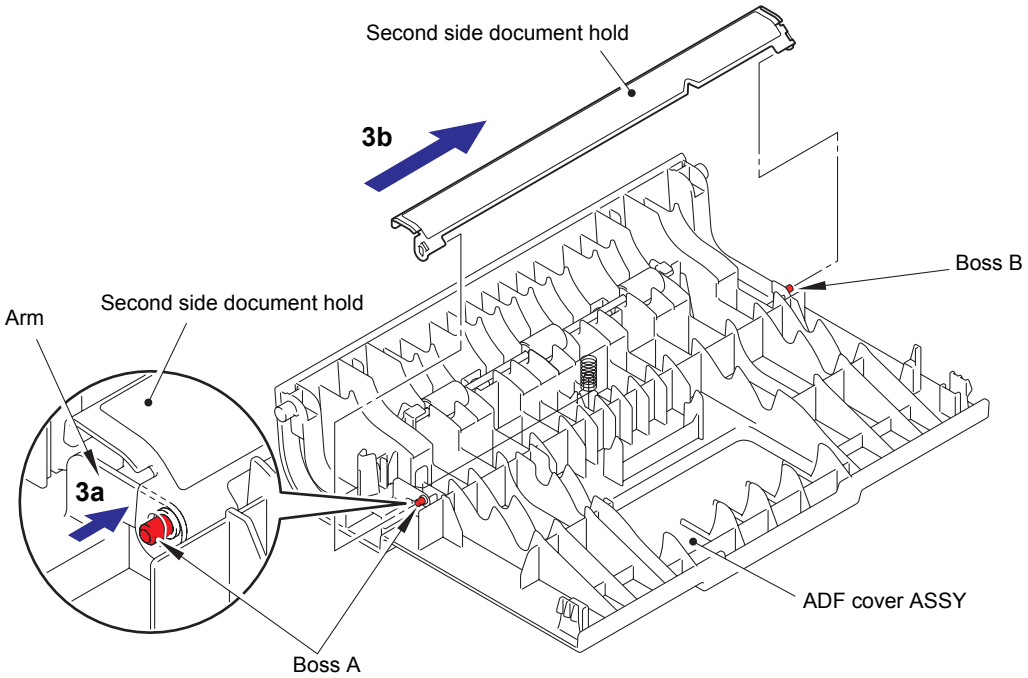

Fig. 3-32

(4) Remove the earth spring from the ADF cover ASSY. (Duplex scanning models only)

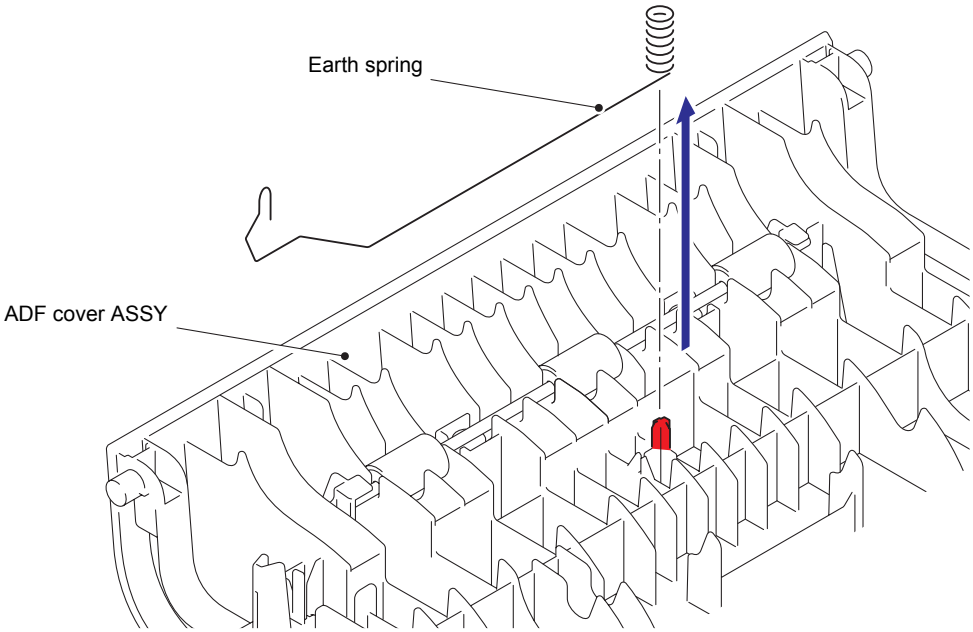

Fig. 3-33

Assembling Note:

- When attaching the earth spring, make sure that the earth spring is attached as shown in the illustration below.

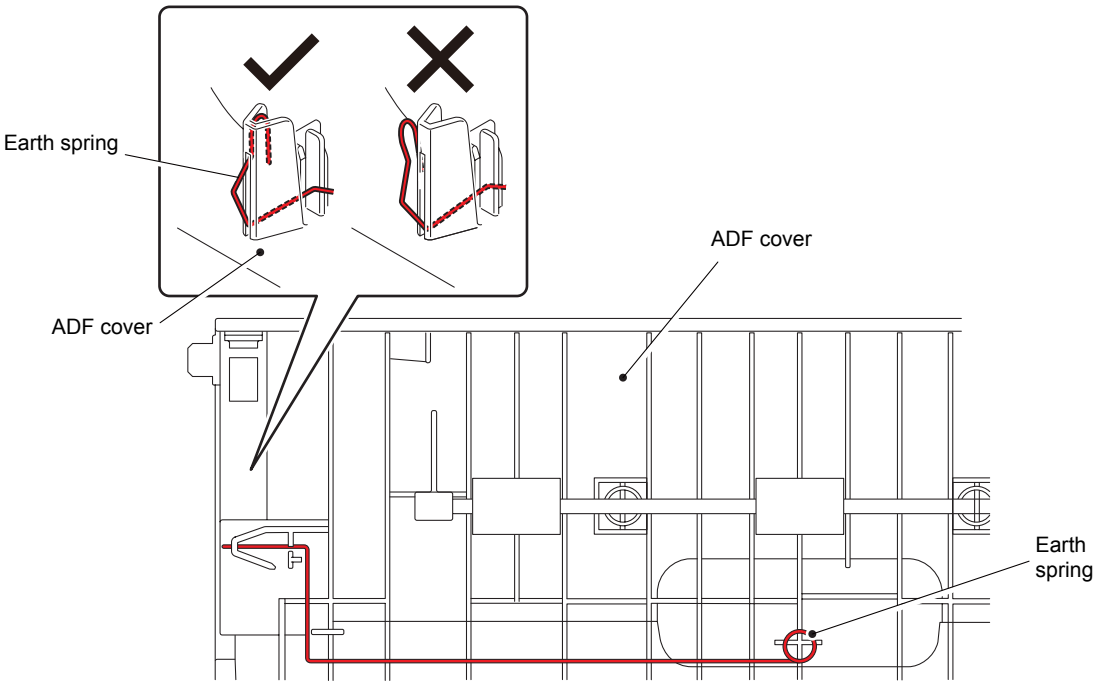

Fig. 3-34

Confidential

9.9.6 Gear cover

(1) Release the two hooks, and remove the gear cover from the ADF unit.

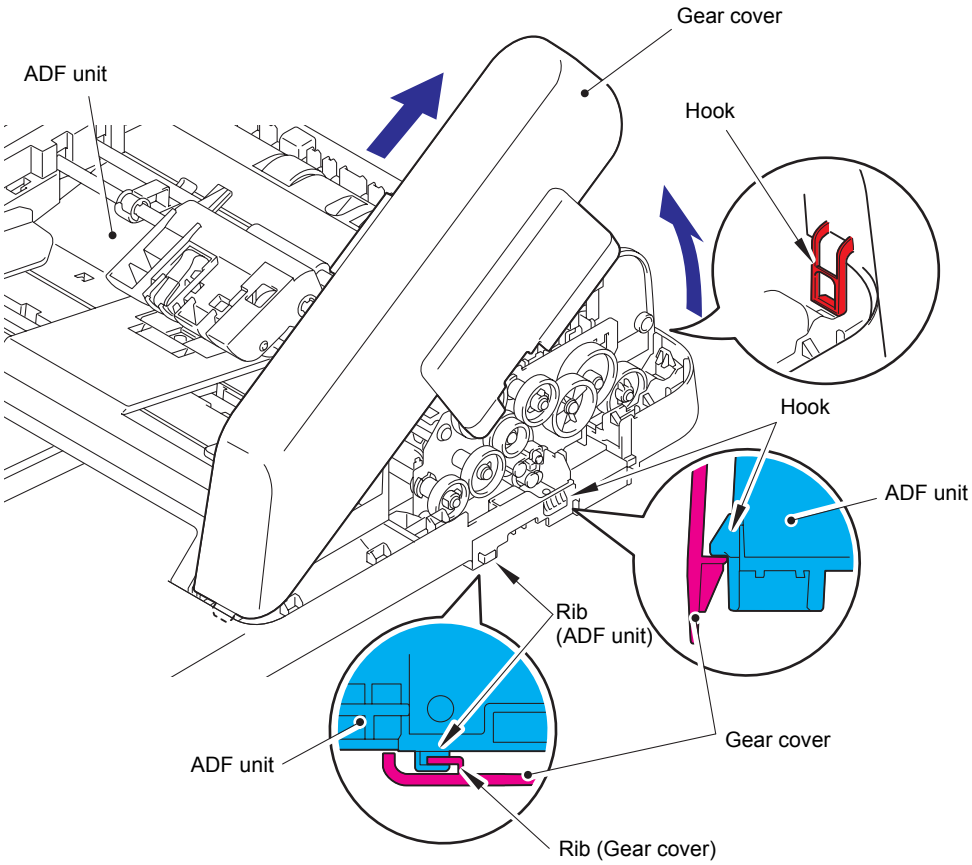

Fig. 3-35

Assembling Note:

- When attaching the gear cover, check that the rib on the gear cover is engaged with the rib on the ADF unit.

9.9.7 Document separate roller ASSY

(1) Turn the conductive bushing in the direction of the arrow to release the lock.

(2) Remove the other end of the conductive bushing to remove the document separate roller ASSY from the ADF unit.

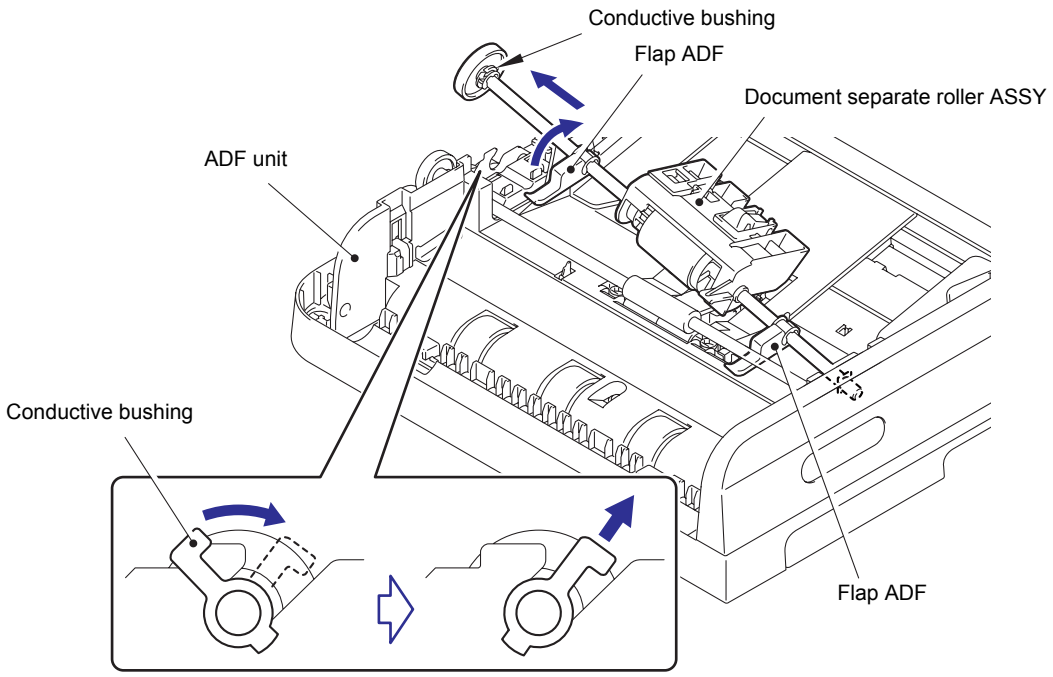

Fig. 3-36

Note:

- When removing the document separate roller ASSY, be careful not to damage the flap ADF.

Assembling Note:

- When attaching the document separate roller ASSY, make sure that the flap ADFs are under document feed roller ASSY 2 as shown in the illustration below. (Duplex scanning models only)

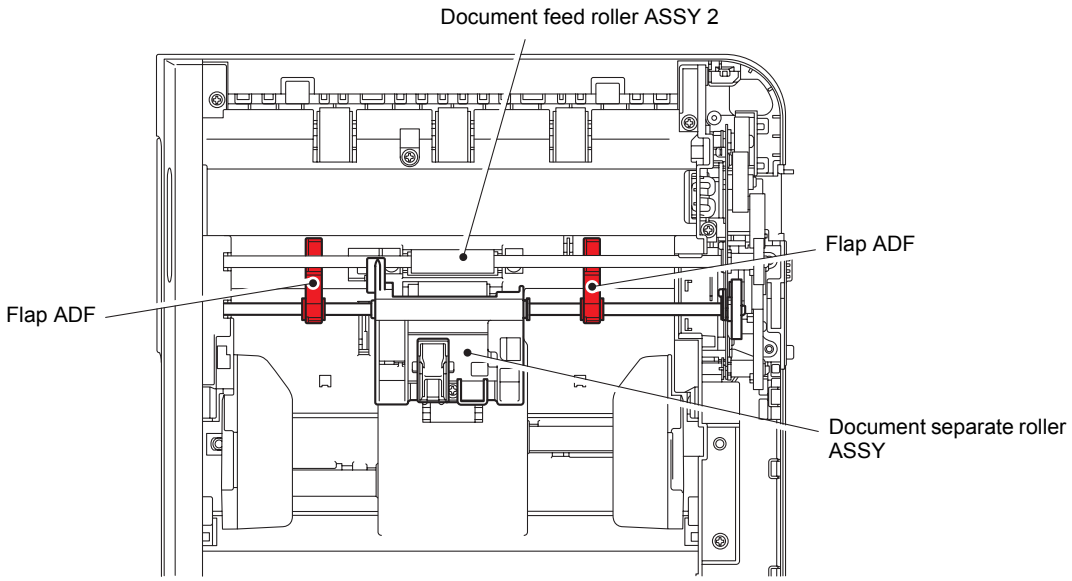

Fig. 3-37

9.9.8 ADF separation pad spring / ADF separation pad

■ **Legal model**

(1) Remove the taptite cup B M3x10 screw from the upper ADF chute.

(2) Release the two hooks, and remove the ADF separation pad holder from the upper ADF chute.

(3) Remove the separation support film and the ADF separation pad from the upper ADF chute.

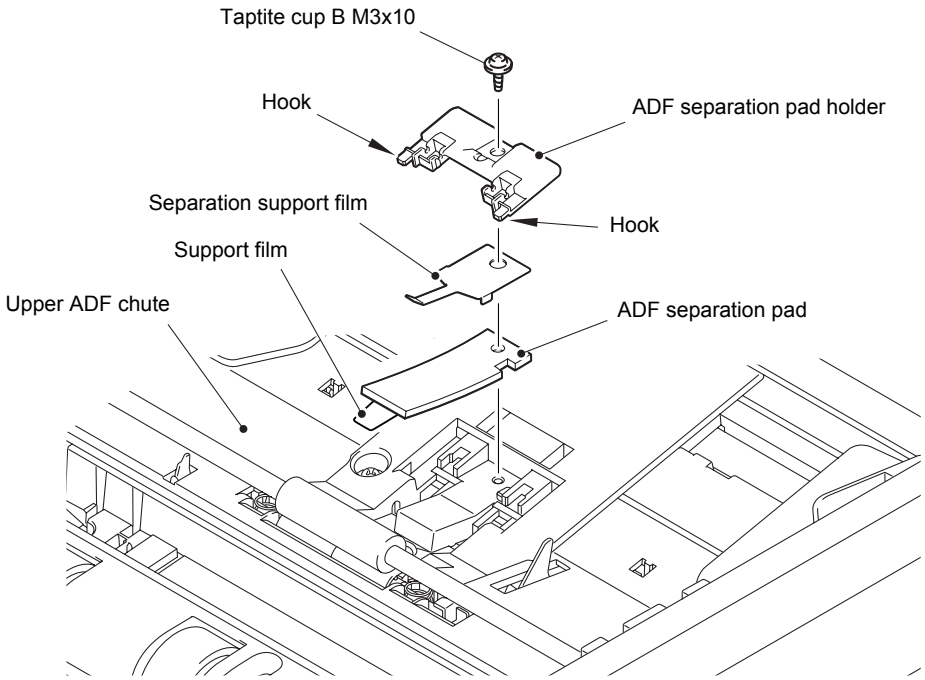

Fig. 3-38

Assembling Note:

- Noise may occur if the tip of the support film comes out of the upper ADF chute.

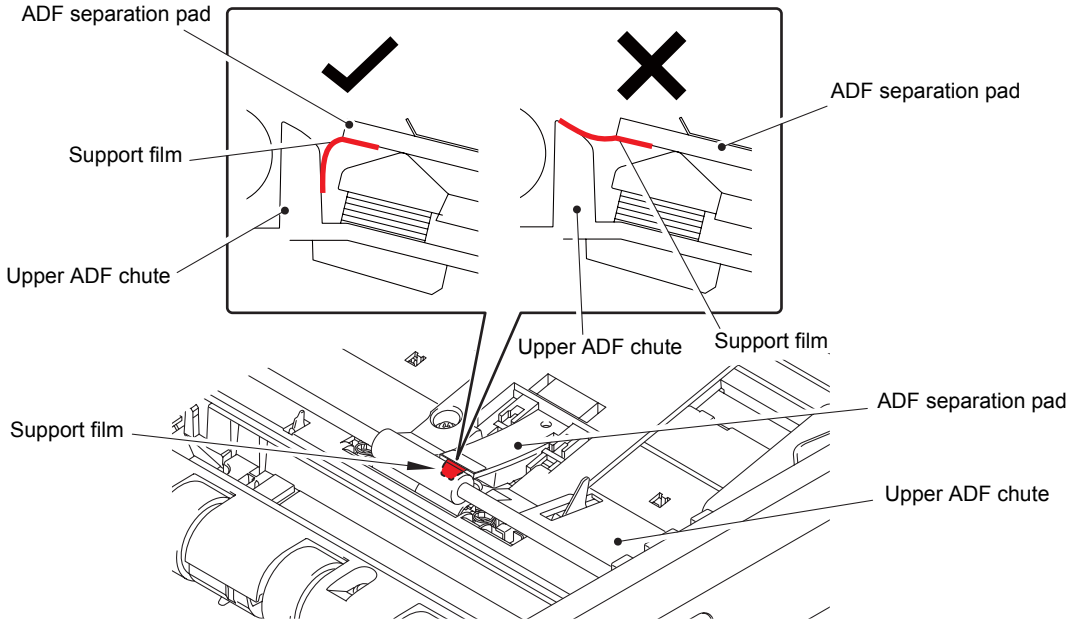

Fig. 3-39

(4) Remove the support film from the ADF separation pad.

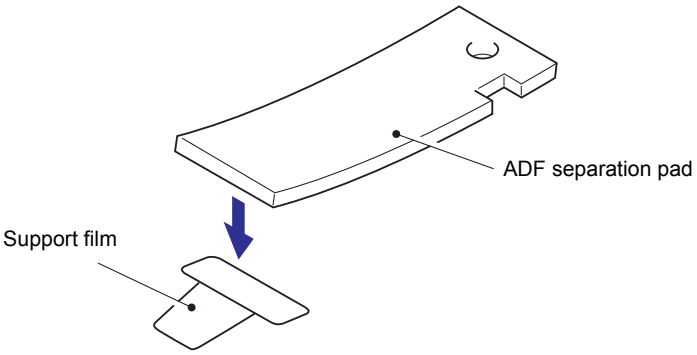

Fig. 3-40

Note:
- When the ADF separation pad is replaced, also replace the support film.

(5) Release the two pins, and remove the ADF separation spring holder from the upper ADF chute.

(6) Remove the ADF separation pad spring from the upper ADF chute.

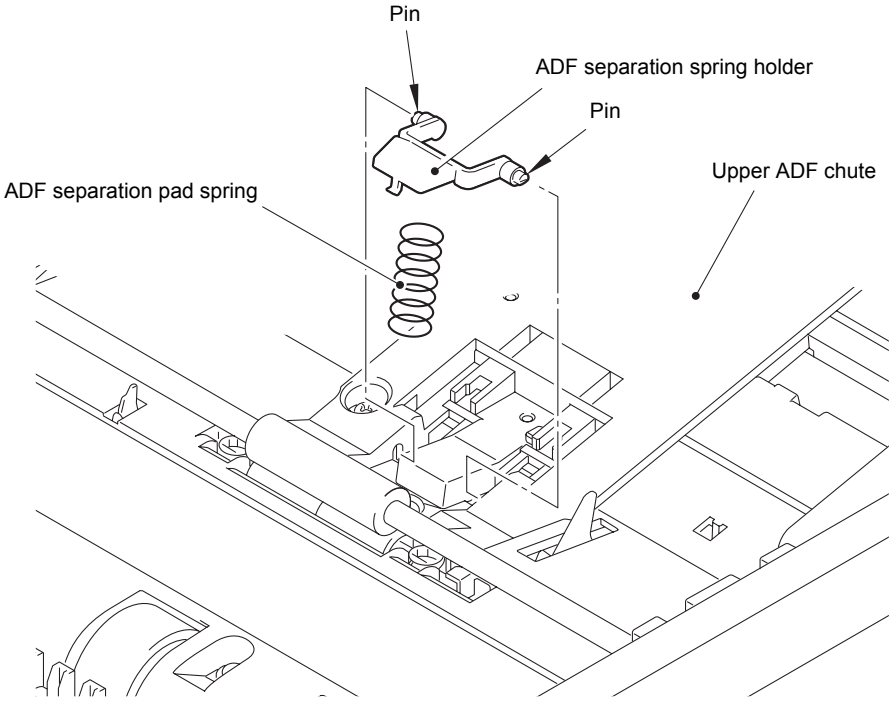

Fig. 3-41

■ A4 model

(1) Release the two pins, and remove the ADF separation pad holder from the upper ADF chute.

(2) Remove the ADF separation pad spring from the upper ADF chute.

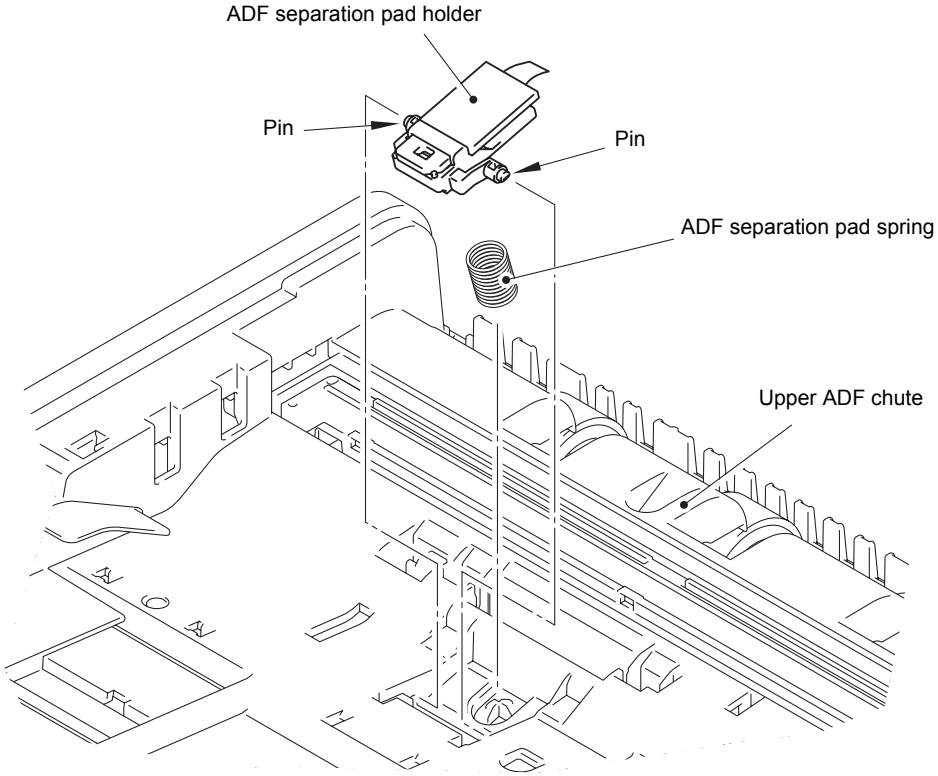

Fig. 3-42

9.9.9 Second side CIS unit / Second side CIS flat cable (duplex scanning models only)

Note:
- Perform disassembly in a dust-free location.

(1) Release the two hooks, and remove the CIS glass stopper from the ADF unit.

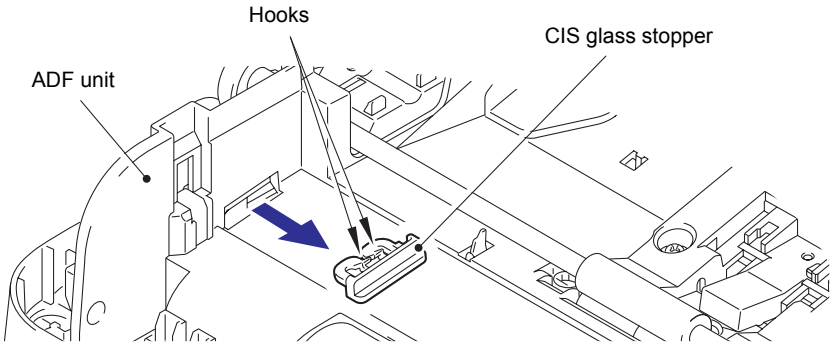

Fig. 3-43

(2) Remove the CIS glass from the ADF unit.

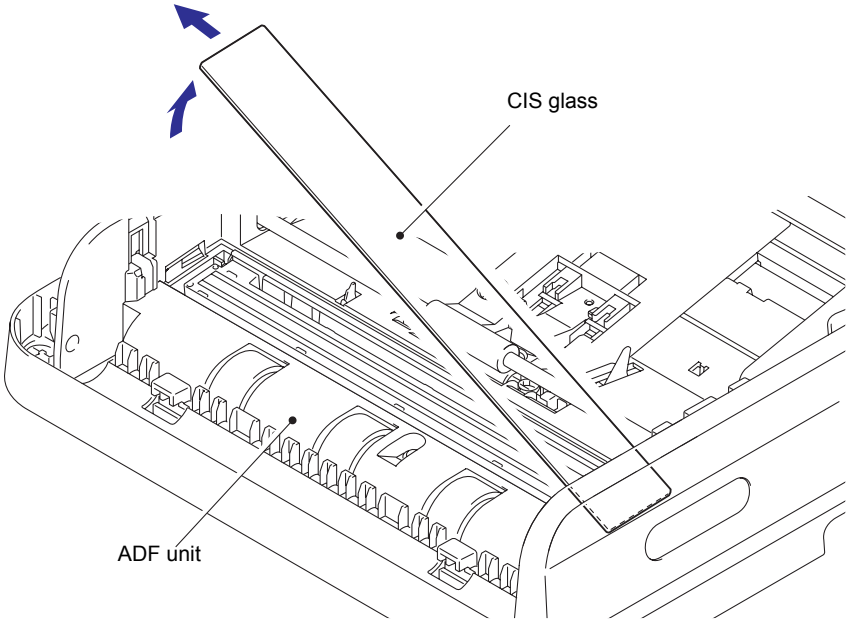

Fig. 3-44

(3) Remove the two CIS spacers from both ends of the second side CIS unit.

(4) Peel the double-sided tape securing the second side CIS flat cable to the back of the ADF unit.

Note:

- Once the double-sided tape is peeled from the second side CIS flat cable, replace the tape with new tape.

(5) Lift the second side CIS unit to remove the second side CIS flat cable.

(6) Remove the two CIS springs from the ADF unit.

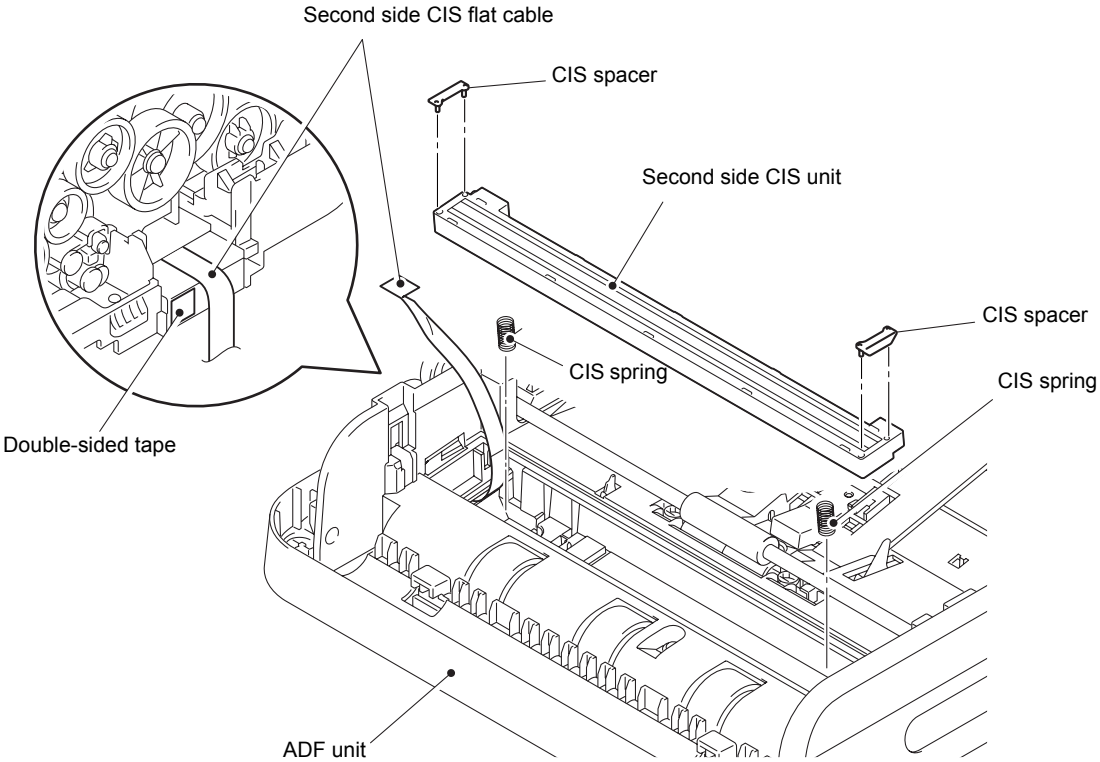

Fig. 3-45

Assembling Note:

- Once the second side CIS flat cable is removed, it cannot be secured with the securing fixtures unless the lower ADF chute is removed. Refer to the Assembling Note in "9.9.12 Drive frame ASSY / Document feed roller ASSY 1" to attach the second side CIS flat cable.

9.9.10 Upper ADF chute

(1) Reverse the ADF unit.

(2) Remove the taptite cup B M3x10 screw from the ADF unit.

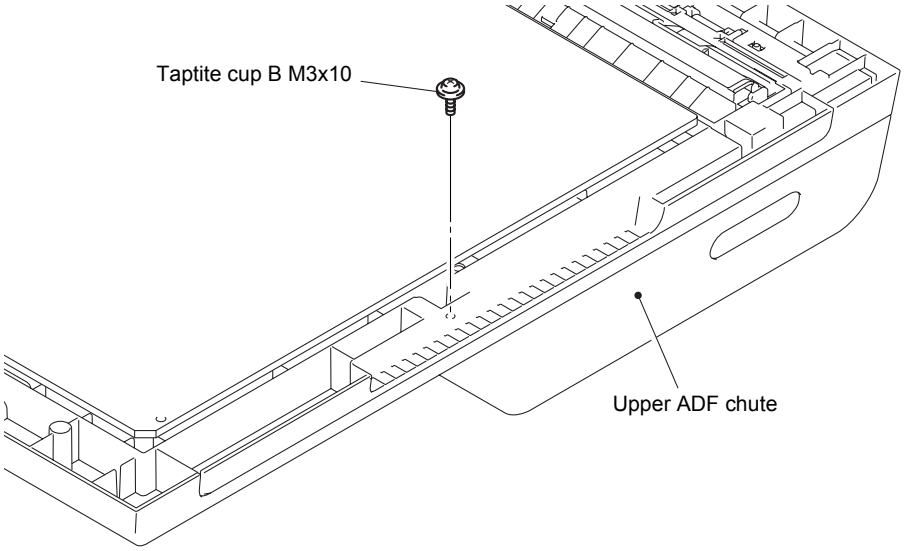

Fig. 3-46

(3) Turn the ADF unit back to the normal direction.

(4) Turn the conductive bushing in the direction of the arrow to release the lock. (Duplex scanning models only)

(5) Remove the other end of the conductive bushing to remove the document feed roller ASSY 2 from the ADF unit. (Duplex scanning models only)

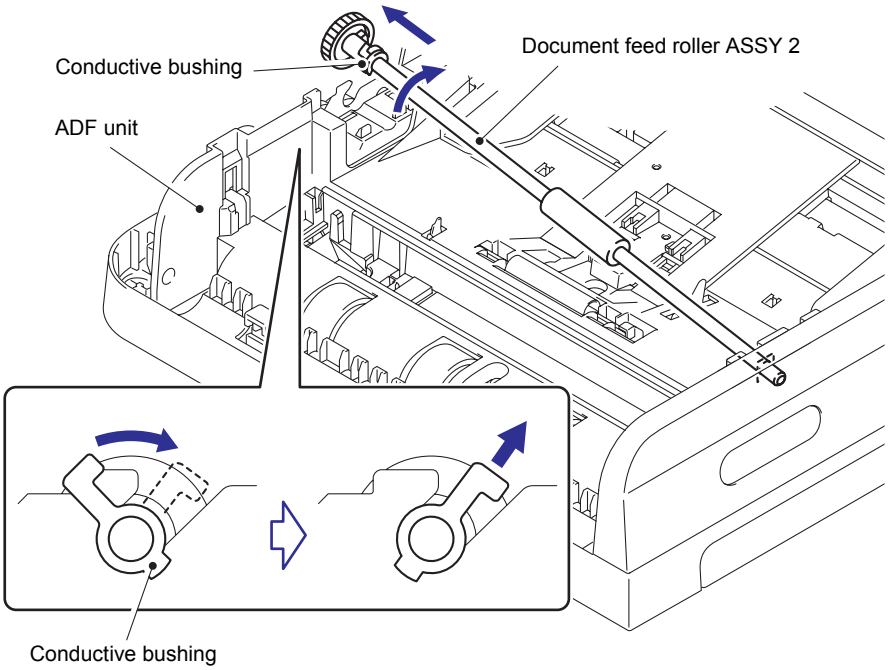

Fig. 3-47

Confidential

(6) Remove the five taptite cup B M3x10 screws from the upper ADF chute.

(7) Remove the upper ADF chute from the ADF unit, and pull out the second side CIS flat cable from the upper ADF chute.

Note:

- Do not disconnect the second side CIS flat cable from the ADF lower chute in this process as it cannot be connected when the ADF lower chute is attached.

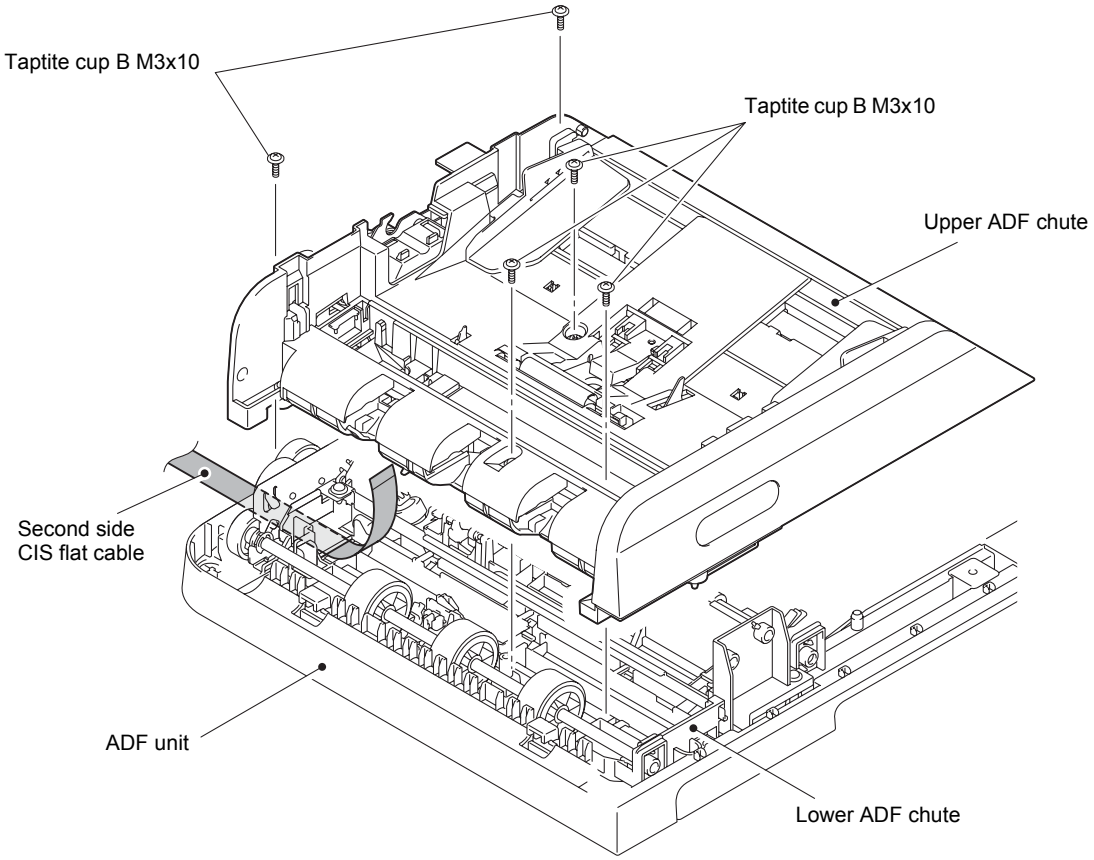

Fig. 3-48

9.9.11 ADF cover/document detection sensor PCB ASSY / First side document scanning position sensor PCB ASSY / Second side document scanning position sensor PCB ASSY (duplex scanning models only)

Memo:

- For duplex scanning models, these parts can be replaced without disassembling the second side CIS unit. In this case, move the upper ADF chute to the position shown in the illustration below to make replacement easier.

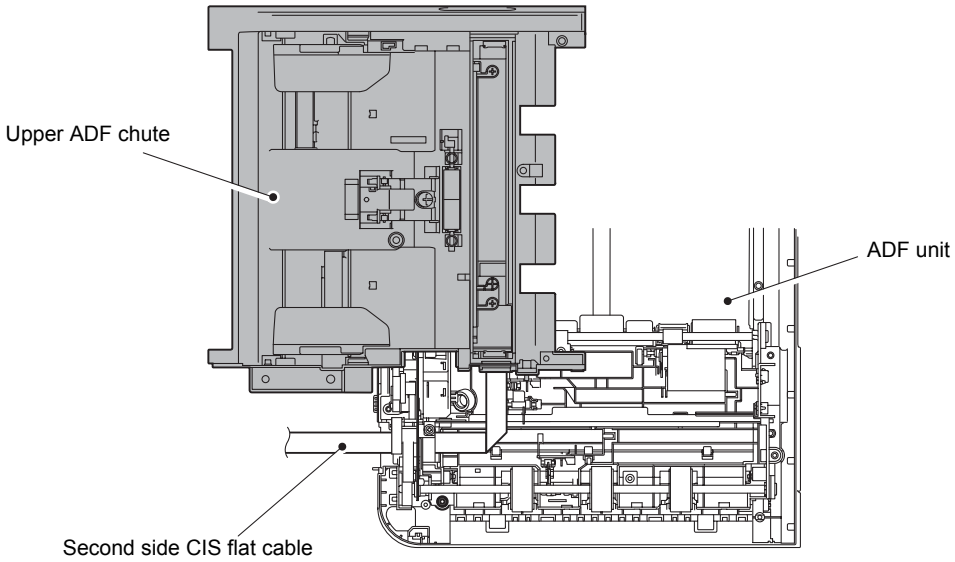

Fig. 3-49

(1) Open the shading film 1, and push the rib to open it. Remove the ADF cover/document detection sensor PCB ASSY from the lower ADF chute.

(2) Disconnect the ADF cover/document detection sensor harness from the ADF cover/document detection sensor PCB ASSY.

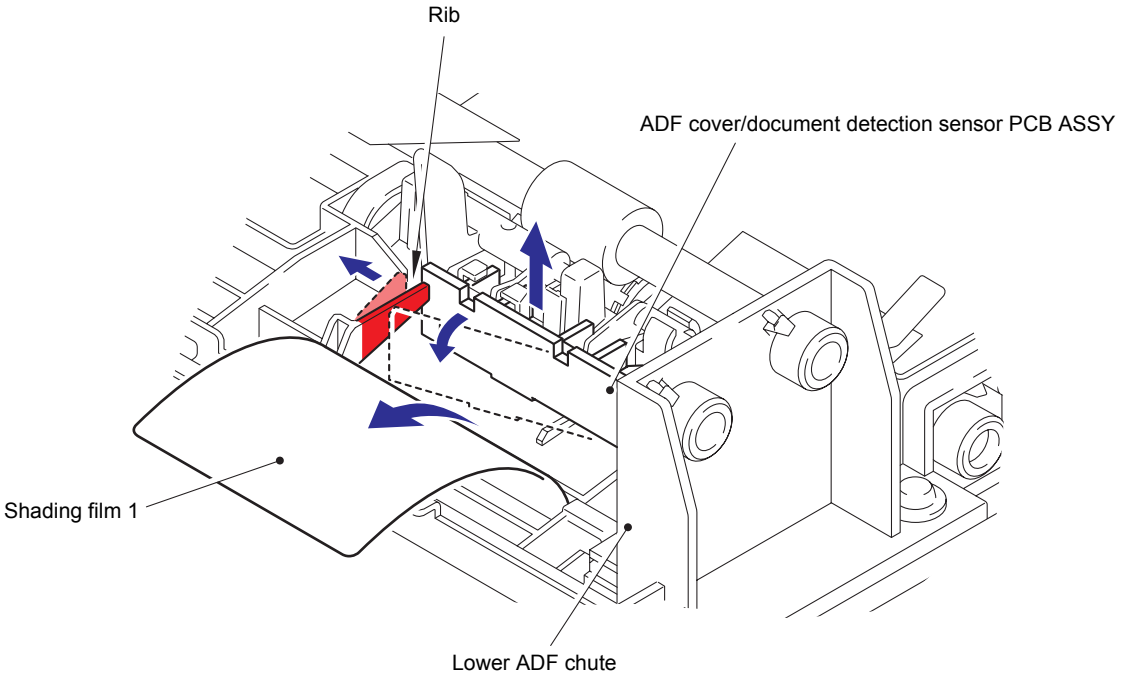

Fig. 3-50

(3) Push the rib to open it, and remove the first side document scanning position sensor PCB ASSY from the lower ADF chute.

(4) Remove the first side document scanning position sensor harness from the first side document scanning position sensor PCB ASSY.

(5) Open the shading film 2, push the rib to open it, and remove the second side document scanning position sensor PCB ASSY from the lower ADF chute. (Duplex scanning models only)

(6) Remove the second side document scanning position sensor harness from the second side document scanning position sensor PCB ASSY.

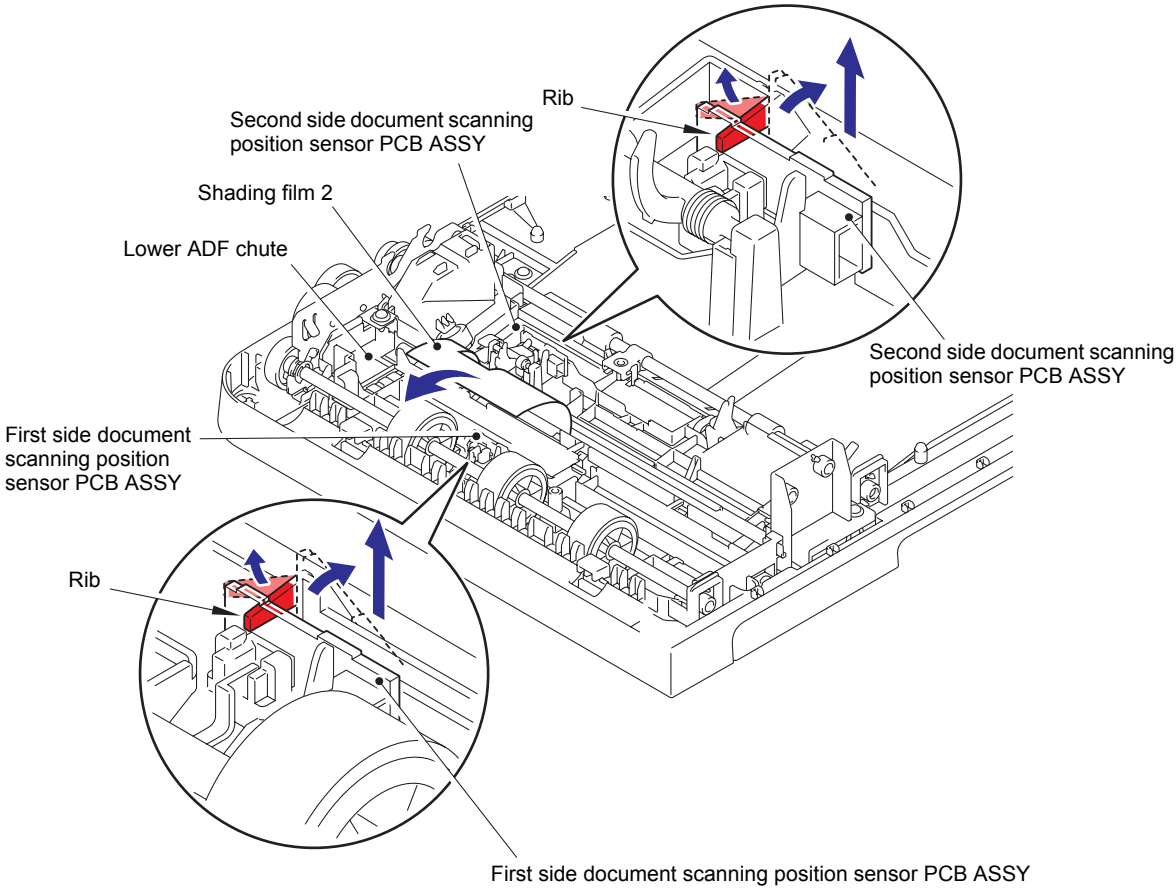

Fig. 3-51

9.9.12 Drive frame ASSY / Document feed roller ASSY 1

(1) Release the two hooks, and remove the document ejection roller bushing from the lower ADF chute.

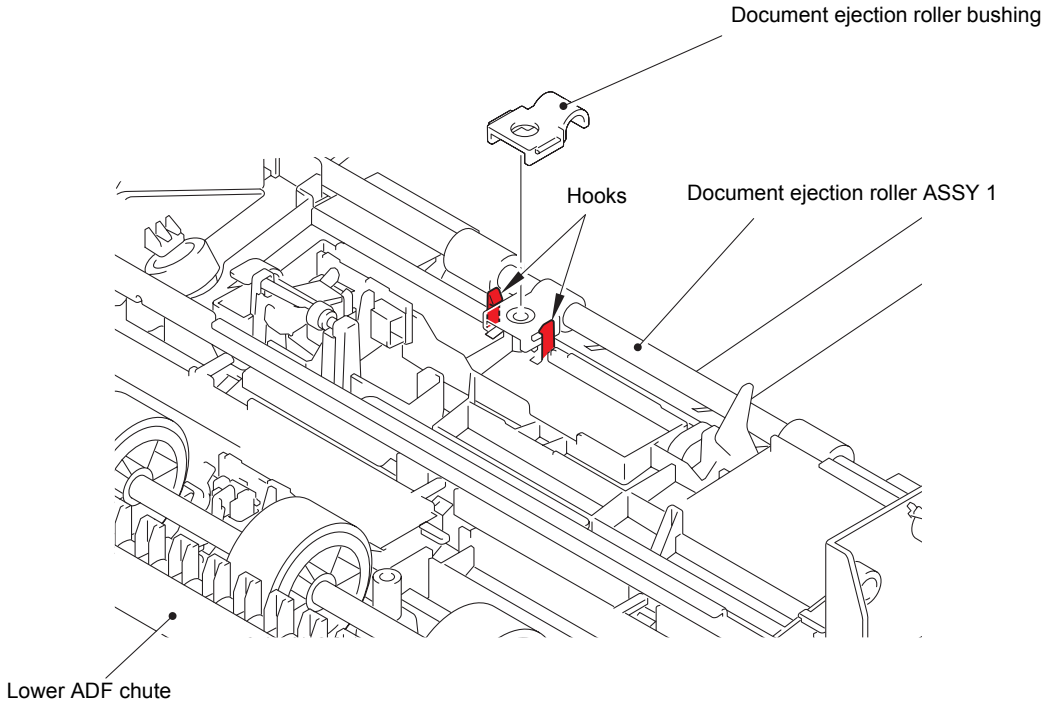

Fig. 3-52

(2) Turn the conductive bushing in the direction of the arrow to release the lock.

(3) Remove the other end of the conductive bushing to remove the document ejection roller ASSY 1 from the lower ADF chute.

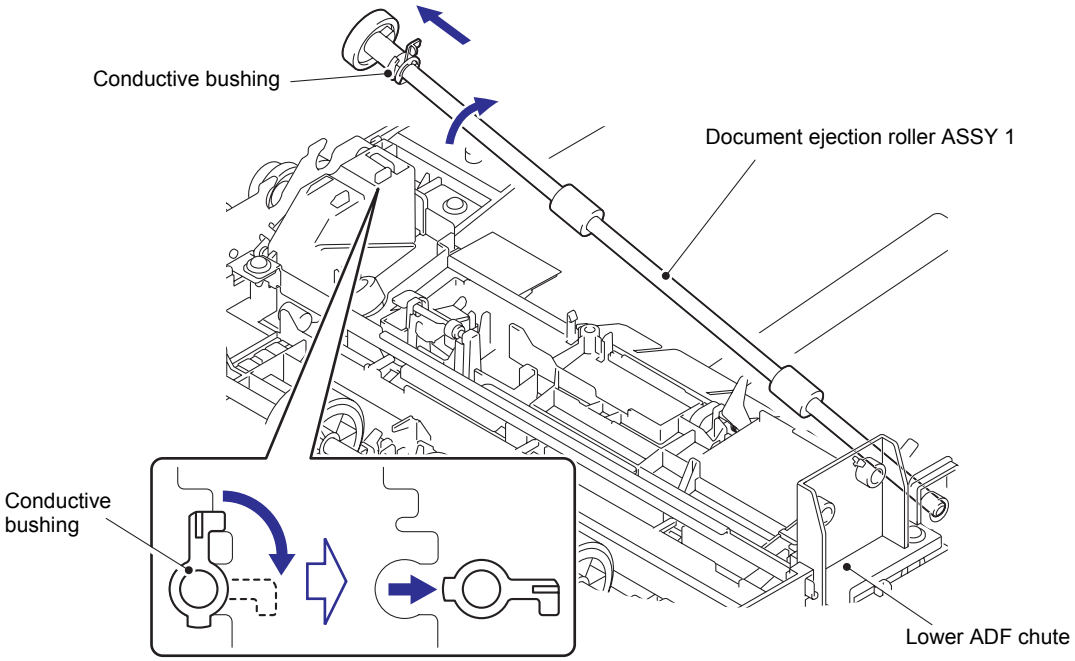

Fig. 3-53

(4) Release the ADF motor harness from the guide of the document cover ASSY.

(5) Remove the three taptite cup B M3x10 screws from the lower ADF chute.

(6) Release the hook, and remove the lower ADF chute from the document cover ASSY.

(7) Remove the second side CIS flat cable.

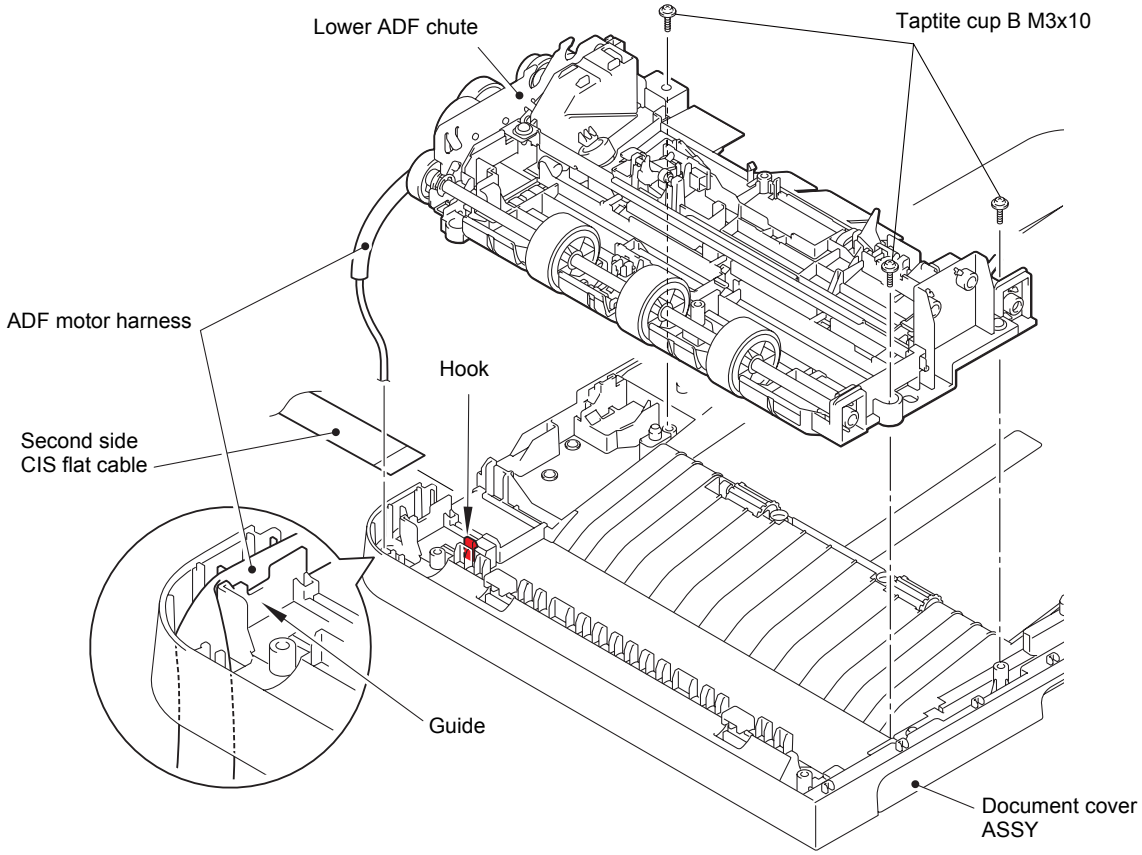

Fig. 3-54

Assembling Note:

- The second side CIS flat cable may have been damaged when it was removed from the FFC holder ASSY. Be sure to replace the second side CIS flat cable with a new one. Follow the procedure below to attach the new second side CIS flat cable.

<Attachment Procedure>

1) Fold the second side CIS flat cable as shown in the illustration below. (Common to Legal / A4 models)

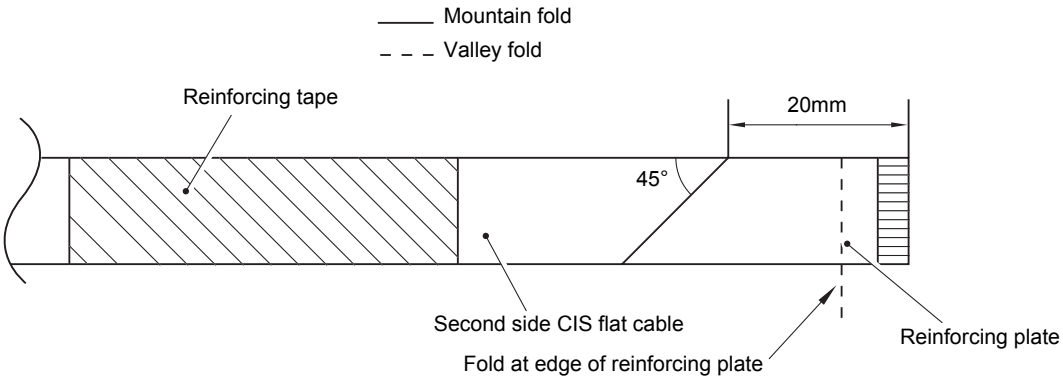

Fig. 3-55

2) Attach the second side CIS flat cable to the second side CIS unit.

3) Pass the second side CIS flat cable through the upper ADF chute and the lower ADF chute.

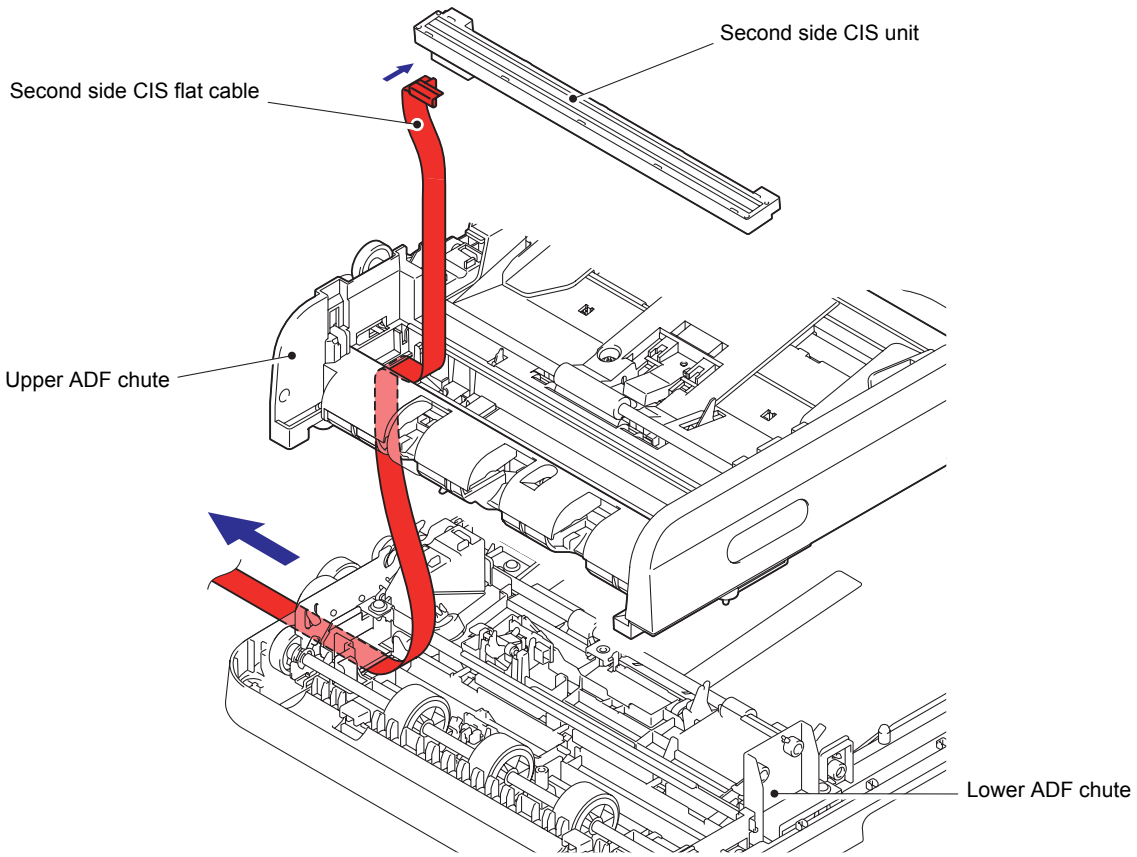

Fig. 3-56

4) Attach the double-sided tape to the FFC holder ASSY as shown in the illustration below. (If the old double-sided tape remains attached, replace it with new tape.)

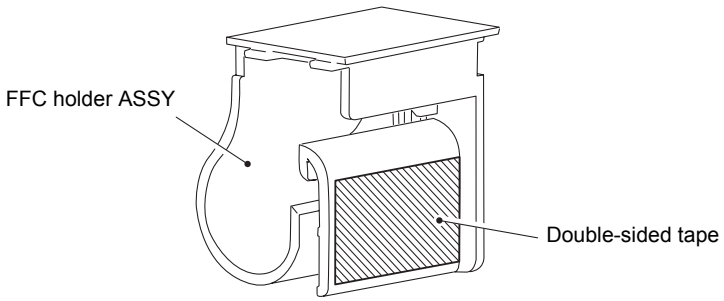

Fig. 3-57

5) Fold one end of the second side CIS flat cable (end to be connected to the second side CIS unit) at 205 mm for legal models and 201 mm for A4 models.

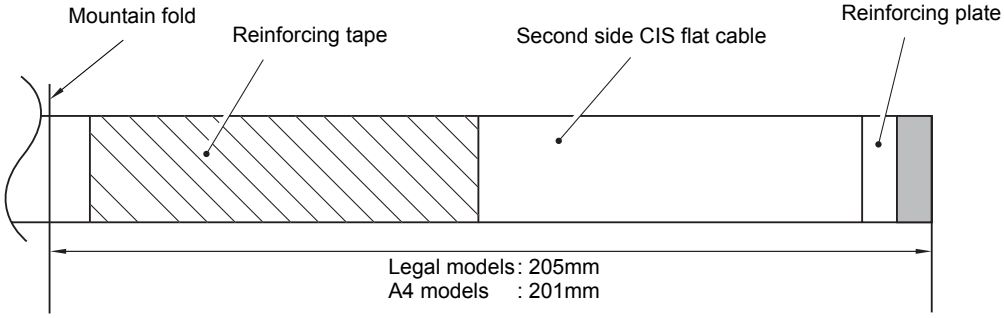

Fig. 3-58

6) As shown in the illustration below, pass the second side CIS flat cable through the FFC holder ASSY while fitting the mountain-folded section to the rib on the FFC holder ASSY. Then secure the second side CIS flat cable to the double-sided tape attached to the FFC holder ASSY.

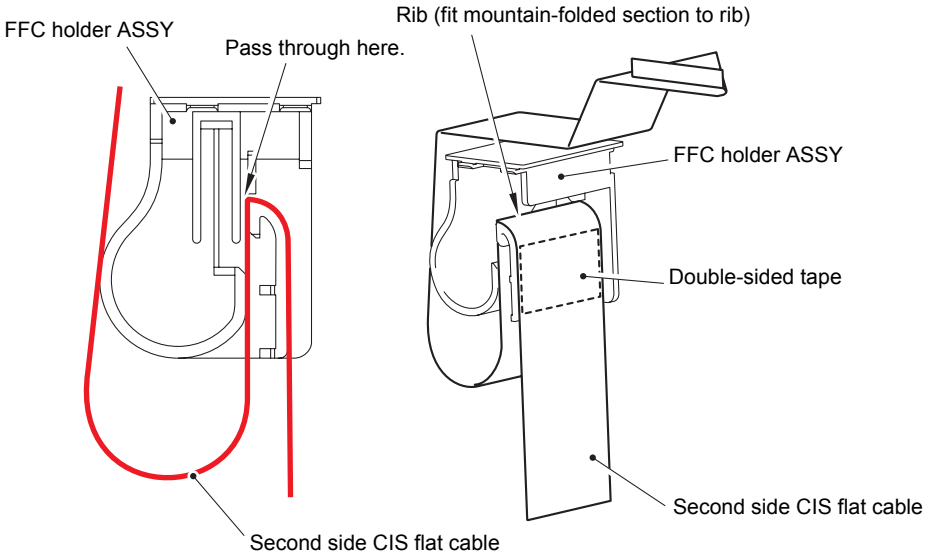

Fig. 3-59

7) Fold the other end of the second side CIS flat cable (end to be connected to the main PCB ASSY).

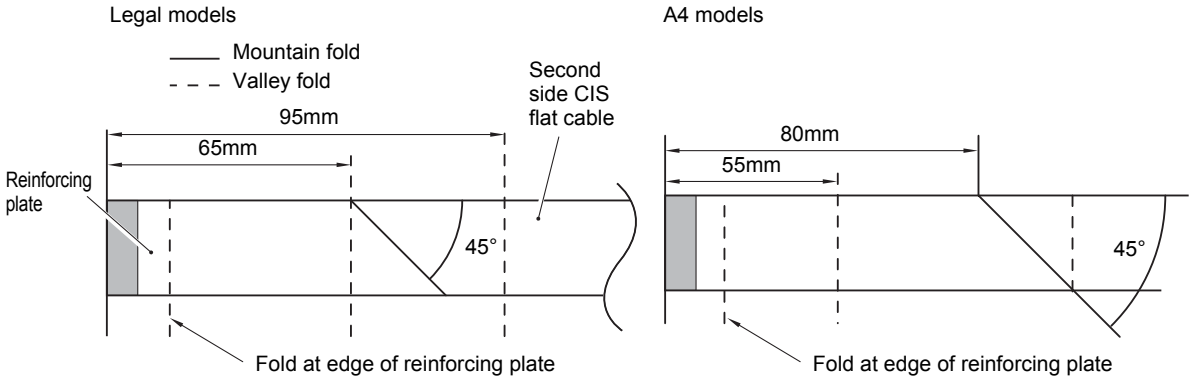

Fig. 3-60

Confidential

(8) Turn the conductive bushing in the direction of the arrow to release the lock.

(9) Remove the other end of conductive bushing to remove the document feed roller ASSY 1 from the lower ADF chute.

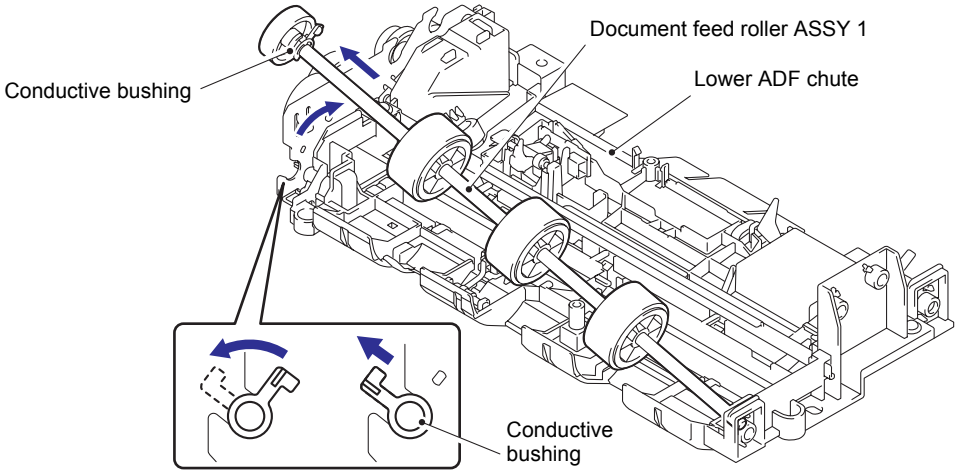

Fig. 3-61

(10) Remove the taptite cup S M3x8 SR screw to remove the ADF earth harness from the lower ADF chute.

(11) Remove the three taptite cup B M3x10 screws to remove the drive frame ASSY from the lower ADF chute.

(12) Remove the ADF motor harness from the ADF motor ASSY.

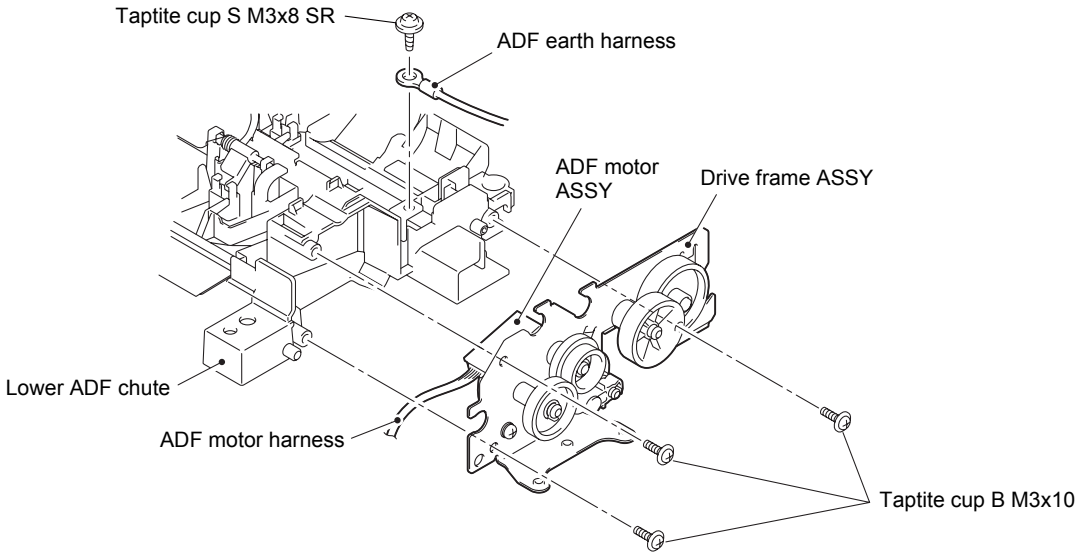

Fig. 3-62

Assembling Note:

When attaching the drive frame ASSY, make sure that the gear of the arm ASSY L2 shaded in gray is engaged with the position shown in the illustration below.

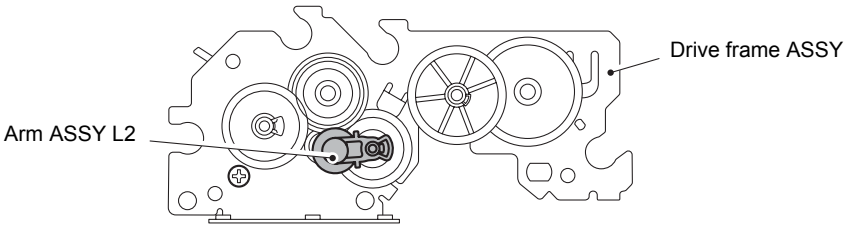

Fig. 3-63

9.9.13 ADF motor ASSY

(1) Release the hook, and remove the gear 43 from the drive frame ASSY.

(2) Remove the screw pan (s/p washer) M3x6 screw to remove the ADF motor ASSY from the drive frame ASSY.

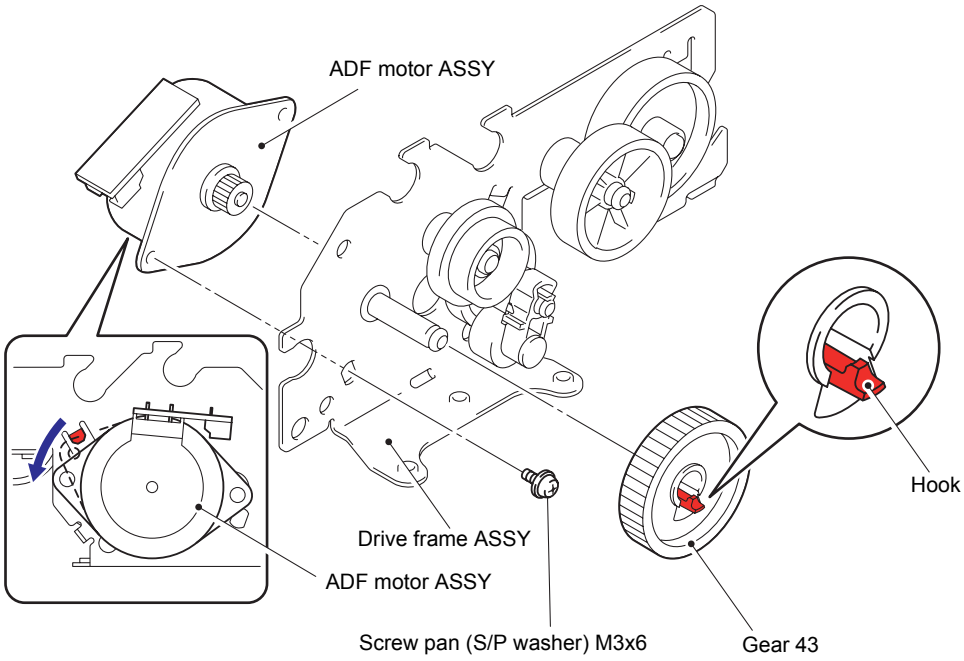

Fig. 3-64

9.9.14 First side document hold

(1) Reverse the lower ADF chute.

(2) Release the two pins, and remove the first side document hold from the lower ADF chute.

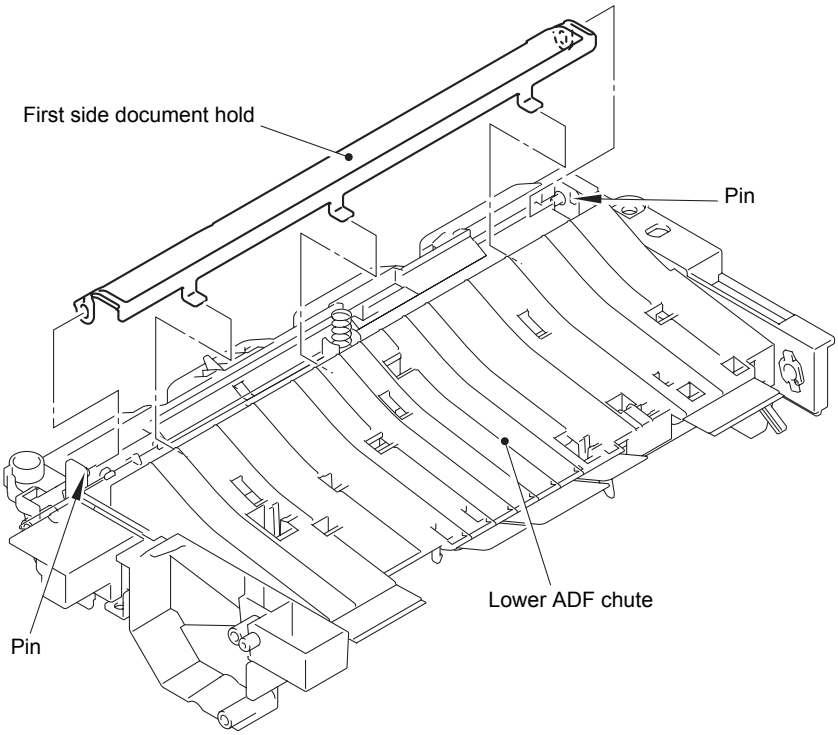

Fig. 3-65

Confidential

9.10 Panel cover / Printed panel cover

<Touch panel models> (Refer to page 3-56 for <Non touch panel models>)

(1) Release the four hooks, and remove the printed panel cover from the control panel ASSY.

(2) Remove the two taptite bind B M4x12 screws.

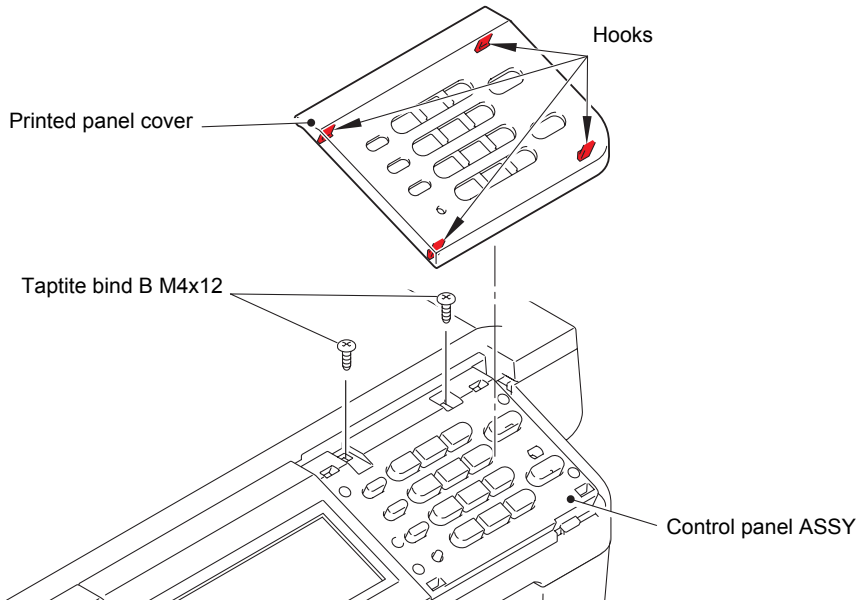

Fig. 3-66

(3) Remove the taptite bind B M4x12 screw to remove the touch panel PCB harness from the machine.

(4) Slightly lift the right side of the control panel ASSY, and slide it in the direction of the arrow to remove it from the machine.

(5) Remove the panel PCB harness from the panel PCB ASSY.

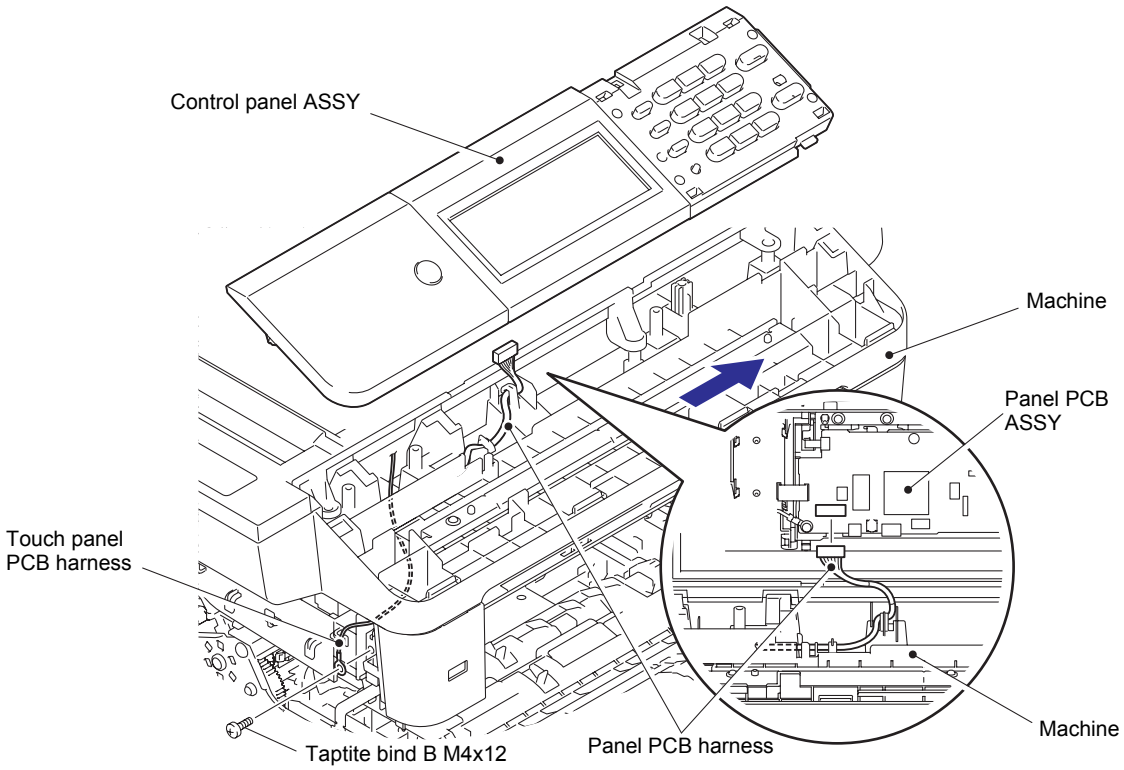

Fig. 3-67

Confidential

(6) Disconnect the touch panel harness and LCD flat cable from the panel PCB ASSY.

(7) Remove the screw pan (S/P washer) M3x6 DA screw to remove the touch panel PCB harness.

(8) Remove the two screw pan (S/P washer) M3x6 DA screws from the panel PCB ASSY.

(9) Release the six hooks, and remove the panel PCB ASSY from the panel cover.

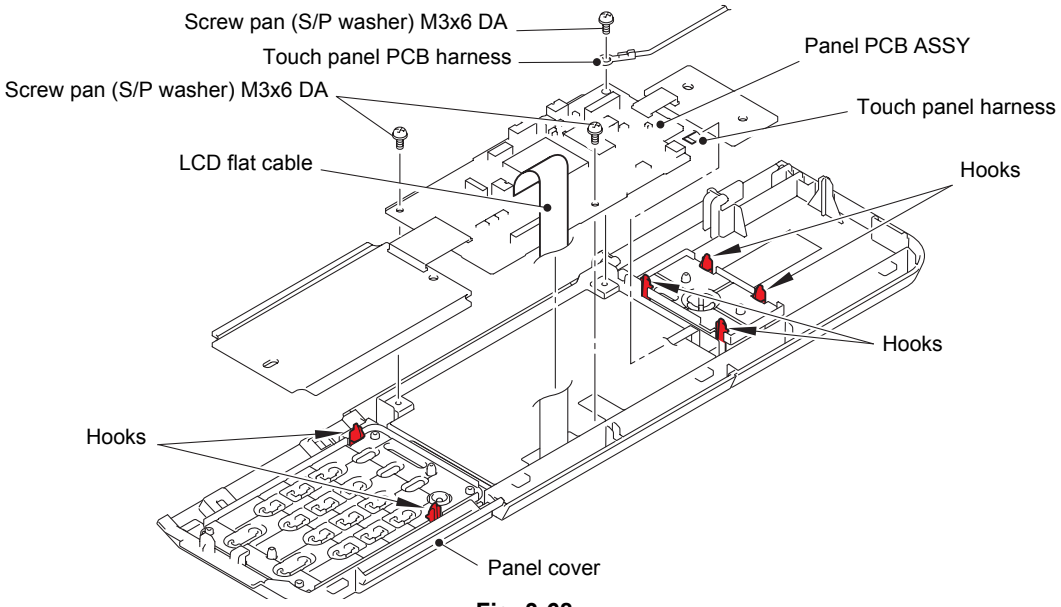

Fig. 3-68

(10) Remove the rubber keys L and R from the panel cover.

(11) Remove the panel light guide from the panel cover.

(12) Open the film to remove the seven taptite cup B M3x10 screws, and remove the touch panel plate from the control panel ASSY.

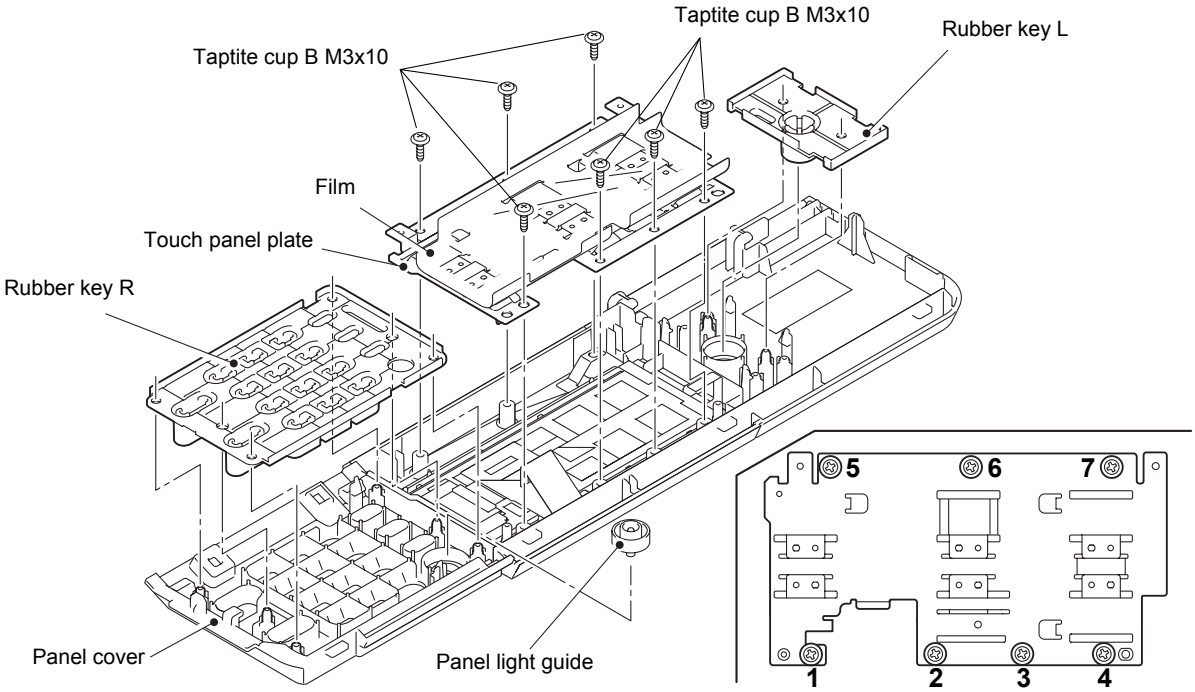

Fig. 3-69

Assembling Note:

- When securing the touch panel plate with screws, tighten the screws in the sequence of the numbers engraved on the touch panel plate.

(13) Remove the LCD and touch panel ASSY from the panel cover.

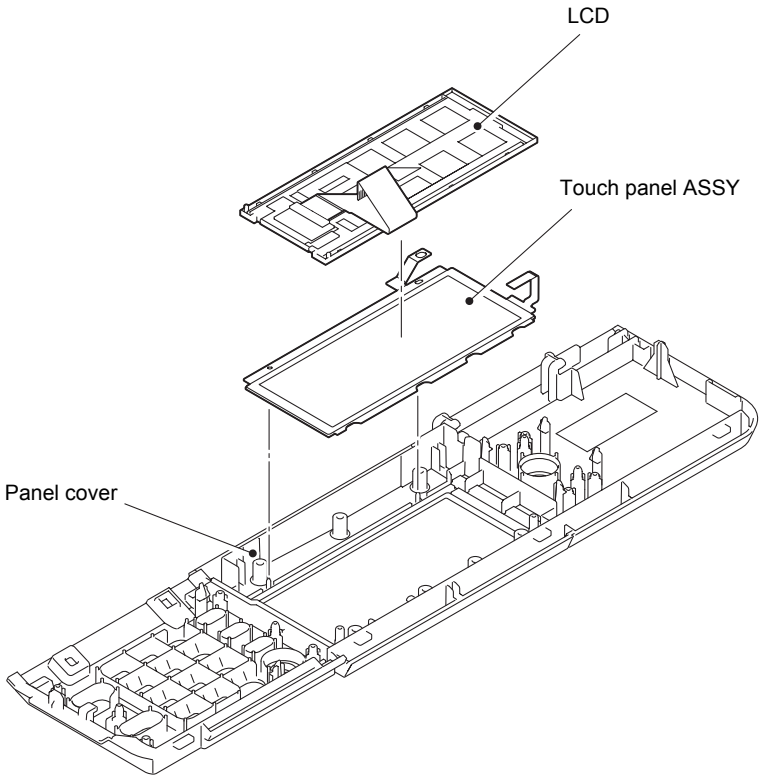

Fig. 3-70

Confidential

<Non touch panel models>

(1) Release the eight hooks, and remove the panel cover from the control panel ASSY.

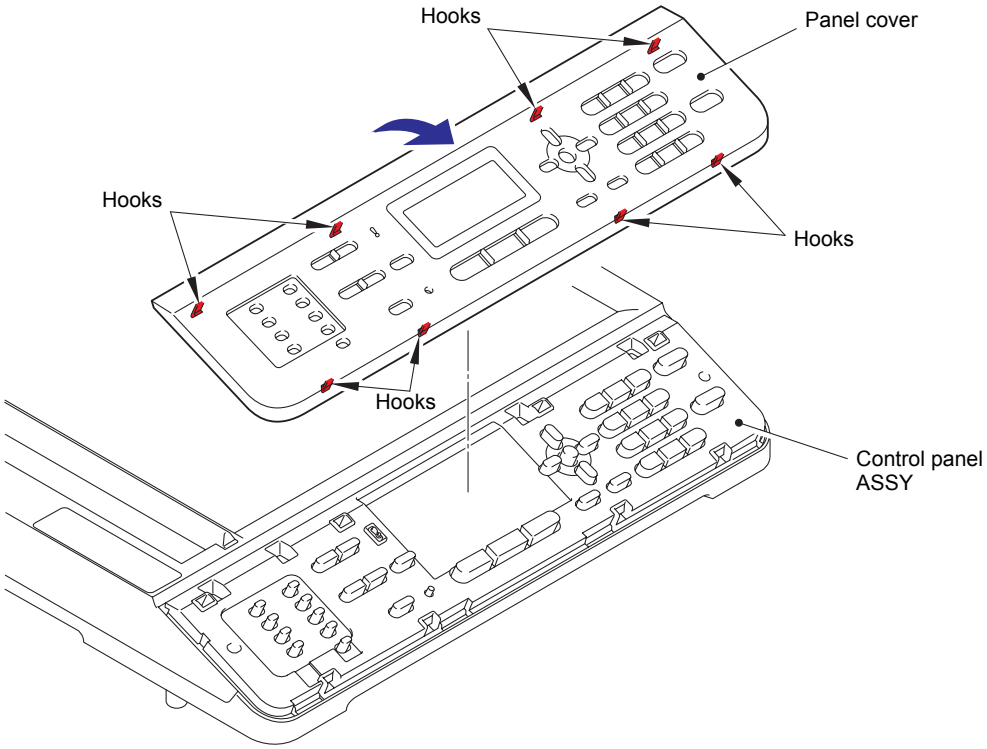

Fig. 3-71

(2) Remove the three taptite bind B M4x12 screws from the control panel ASSY.

(3) Release the four hooks, and remove the control panel ASSY from the machine.

(4) Remove the panel PCB harness from the panel PCB ASSY.

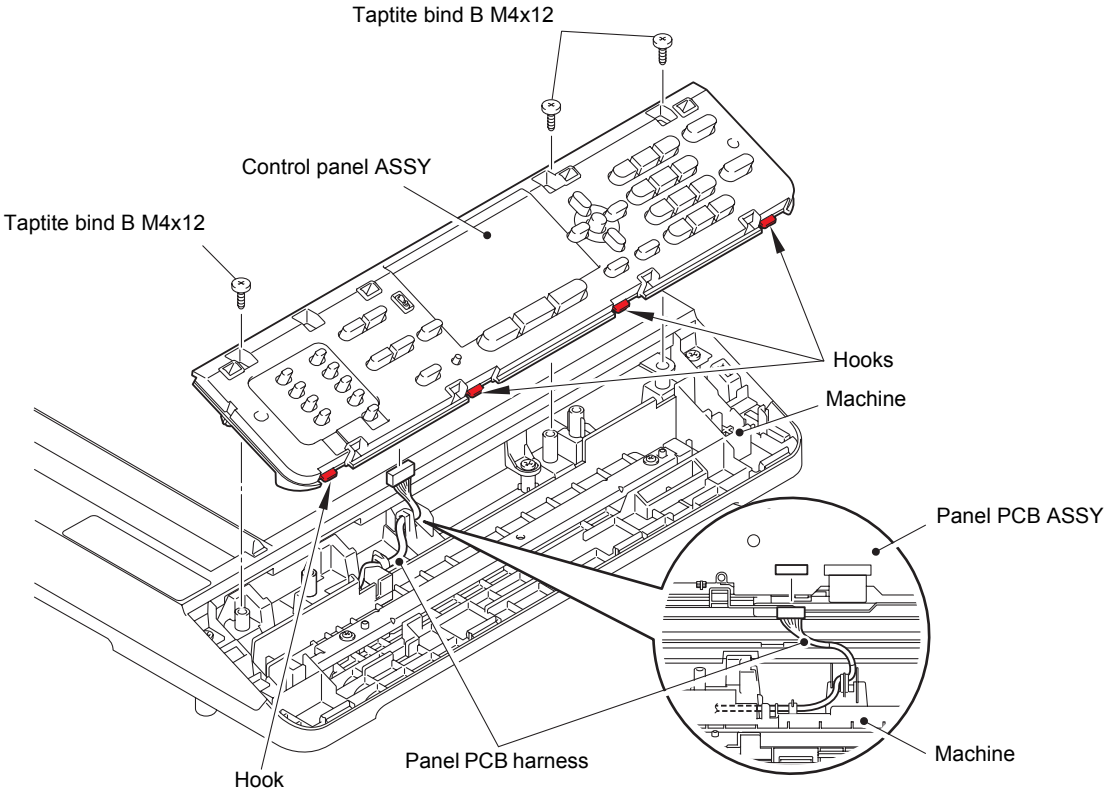

Fig. 3-72

(5) Release the lock, and disconnect the LCD flat cable from the panel PCB ASSY.

(6) Disconnect the back light harness from the panel PCB ASSY.

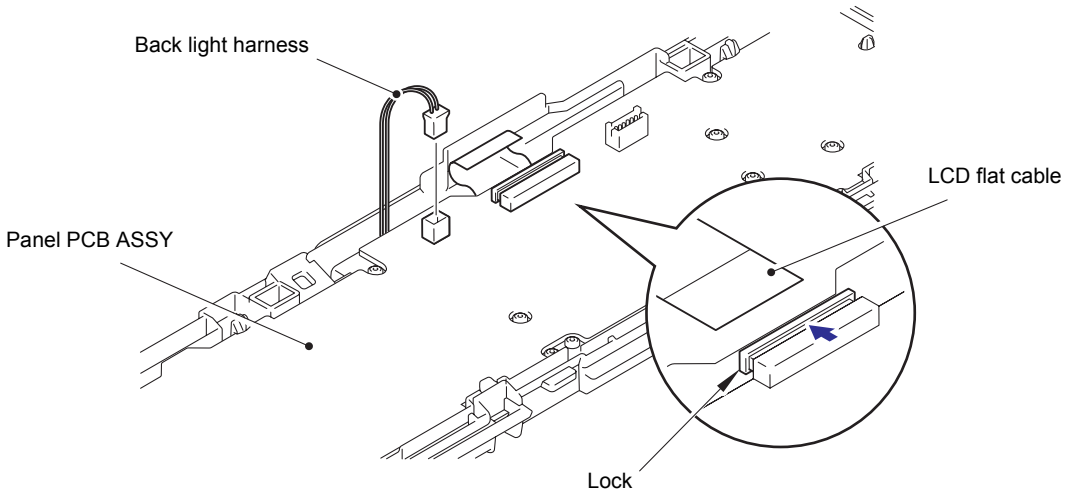

Fig. 3-73

(7) Release the ten hooks (six for DCP models), and remove the panel PCB ASSY from the control panel ASSY.

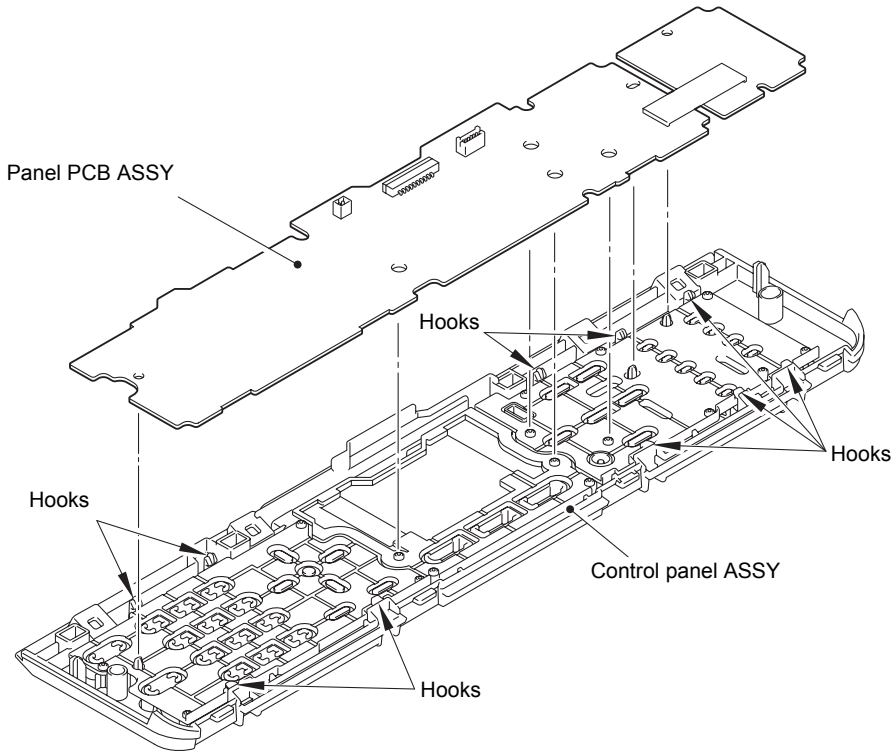

Fig. 3-74

(8) Remove the rubber keys C, R, and L from the control panel ASSY.

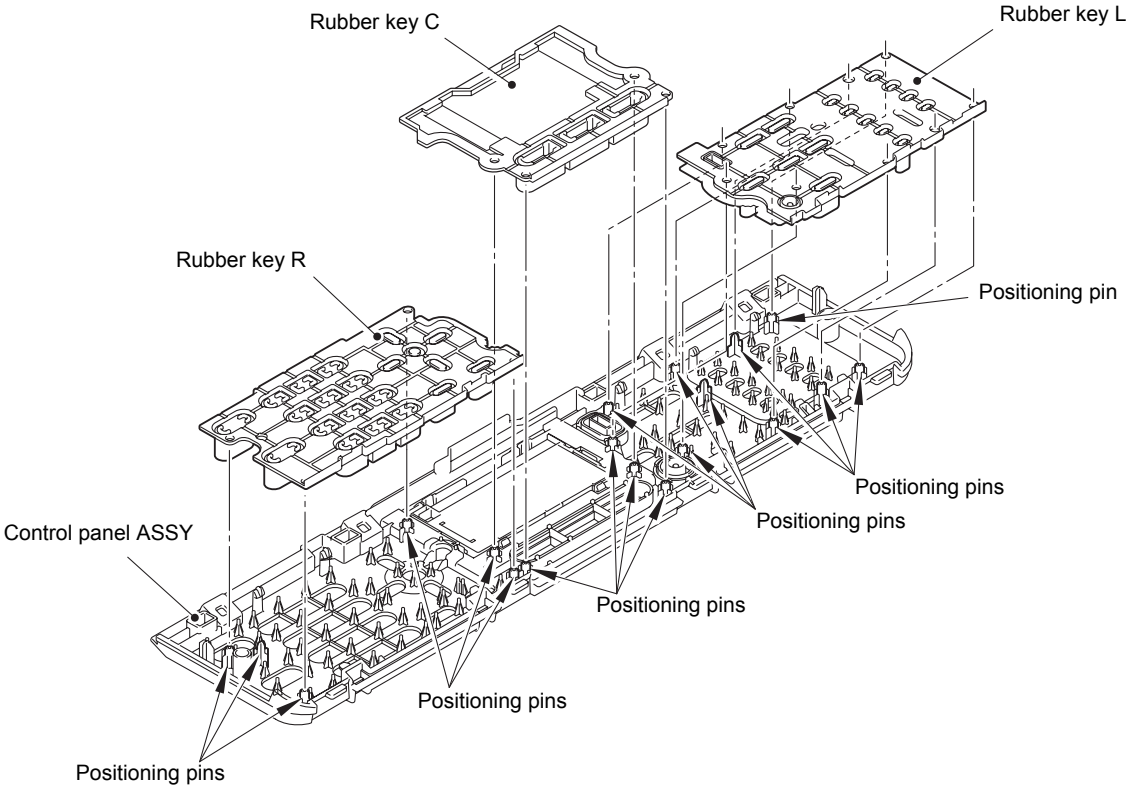

Fig. 3-75

Assembling Note:

- In the assembly procedure, be sure to attach the rubber keys L and R, and then attach the rubber key C.
- Check that the holes on the rubber keys are engaged with the positioning pins.

(9) Remove the panel light guide and the caution lamp lens from the control panel ASSY.

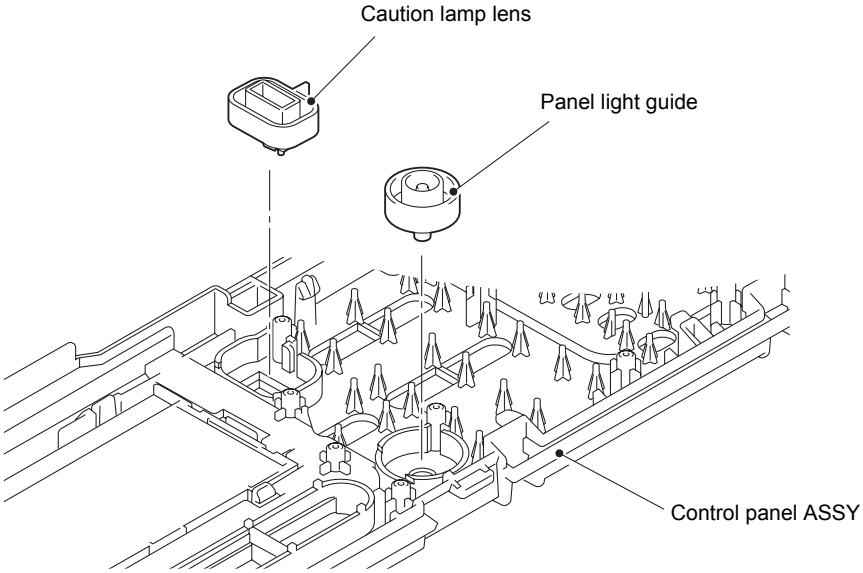

Fig. 3-76

(10) Release the four hooks, and remove the LCD cover and the back light ASSY from the control panel ASSY.

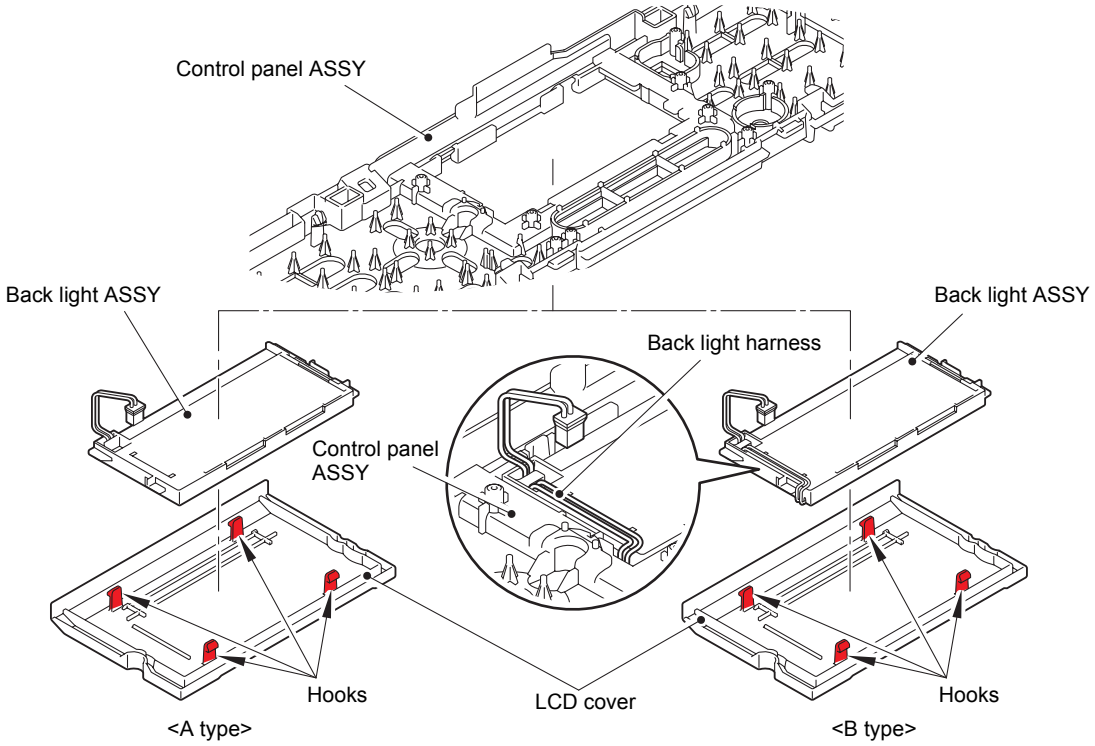

Fig. 3-77

Note:

- When the back light ASSY is removed, the LCD may also be removed. Be careful.
- There are two types of back light ASSY, the B type do not catch the back light harness between the panel ASSY and the back light ASSY.
  Make sure that the back light harness is attached as shown in the illustration above.

(11) Remove the LCD from the back light ASSY.

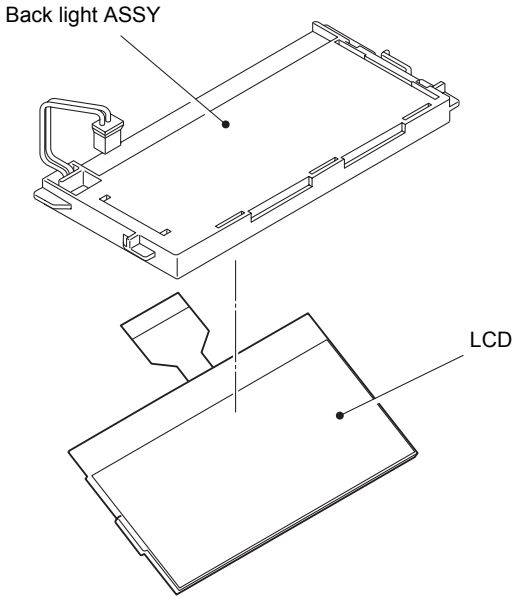

Fig. 3-78

Confidential

9.11 Document scanner unit

(1) Disconnect the document scanner motor harness and the panel PCB harness, and release these harnesses from the securing fixtures.

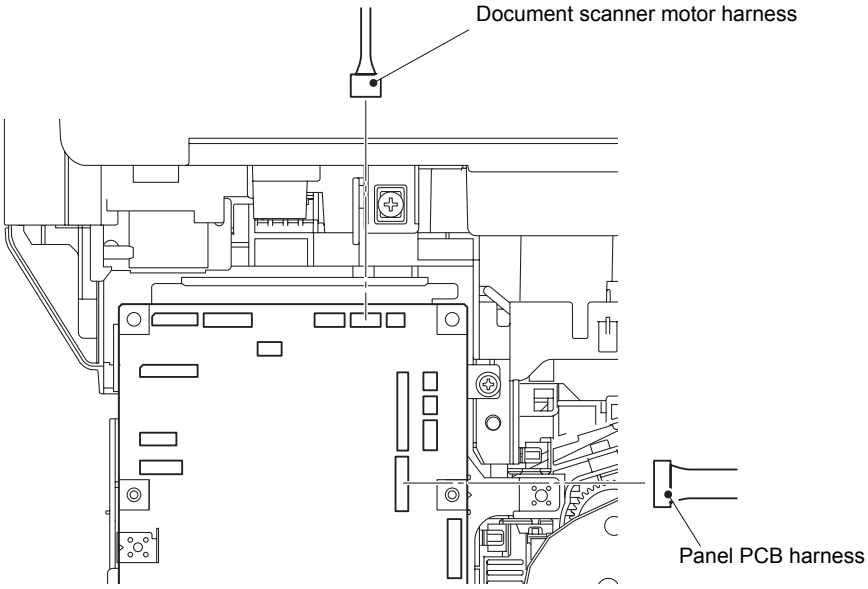

Fig. 3-79

Harness routing: Refer to "1.Main PCB ASSY" and "10.Panel PCB ASSY" .

(2) Remove the five taptite bind B M4x12 screws from the document scanner unit.

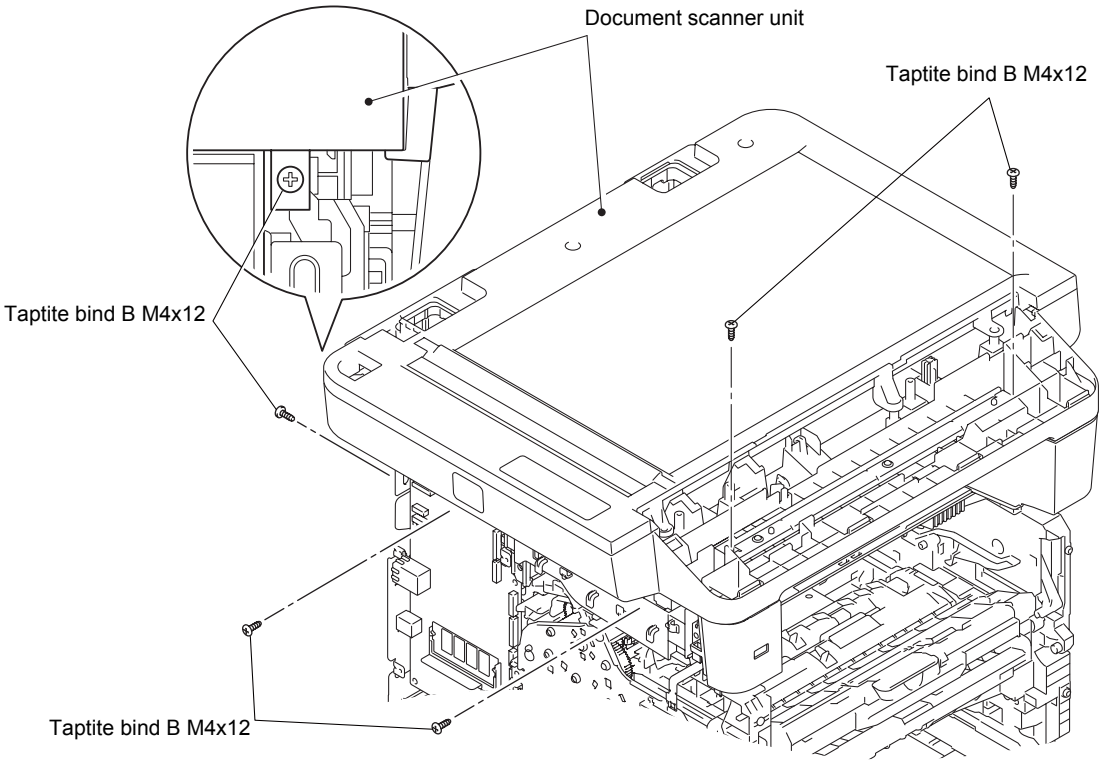

Fig. 3-80

(3) Release the three hooks. Slightly lift the left side of the document scanner unit, and slide it to the left to remove it.

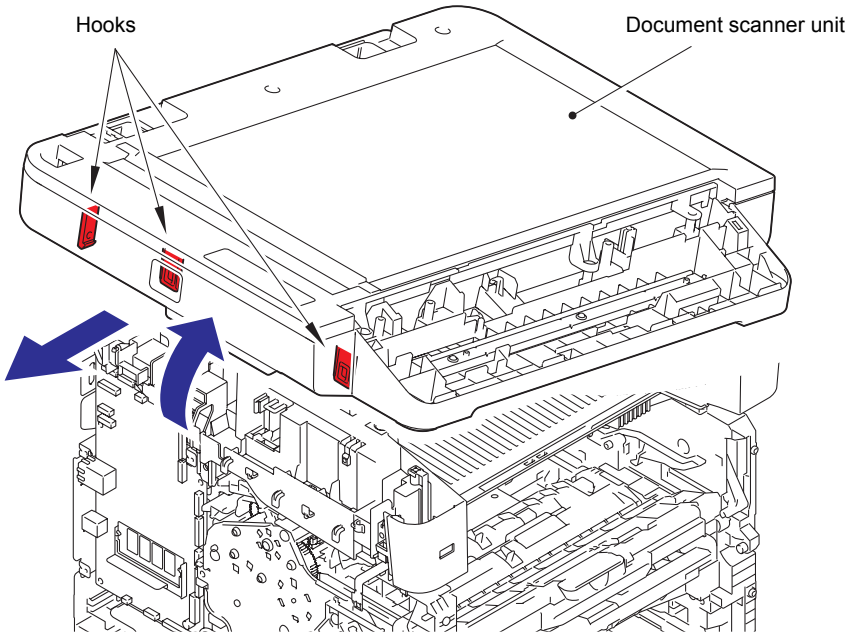

Fig. 3-81

9.11.1 First side CIS unit

(1) Remove the five taptite bind B M4x12 screws from the document scanner top cover ASSY.

(2) Lift the back of the document scanner top cover ASSY, and slide it in the direction of arrow 2 to remove it from the document scanner unit.

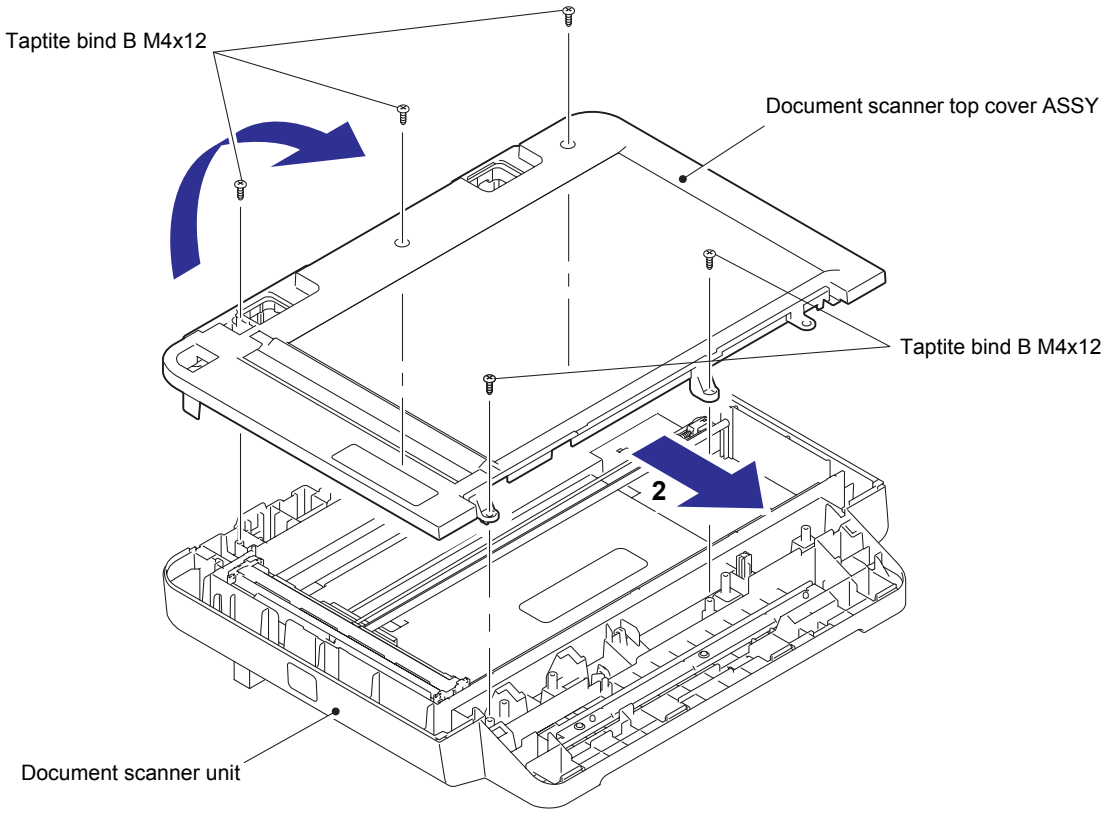

Fig. 3-82

(3) Remove the CIS guides L and R from the document scanner unit.

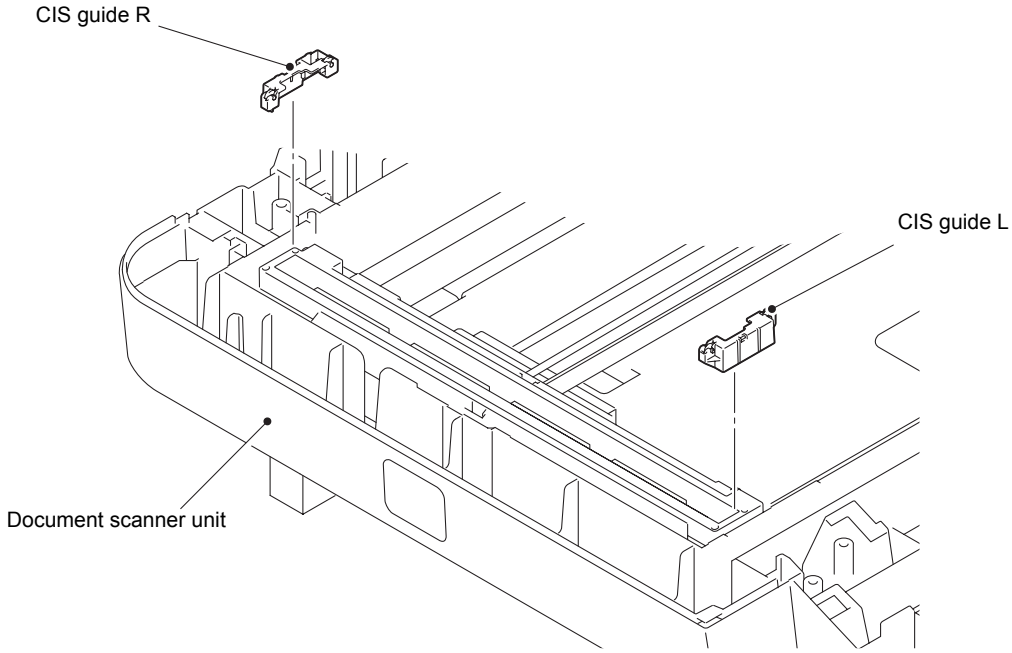

Fig. 3-83

(4) Slowly move the CIS carriage in the direction of the arrow to the center, and remove the CIS drive belt from the CIS carriage.

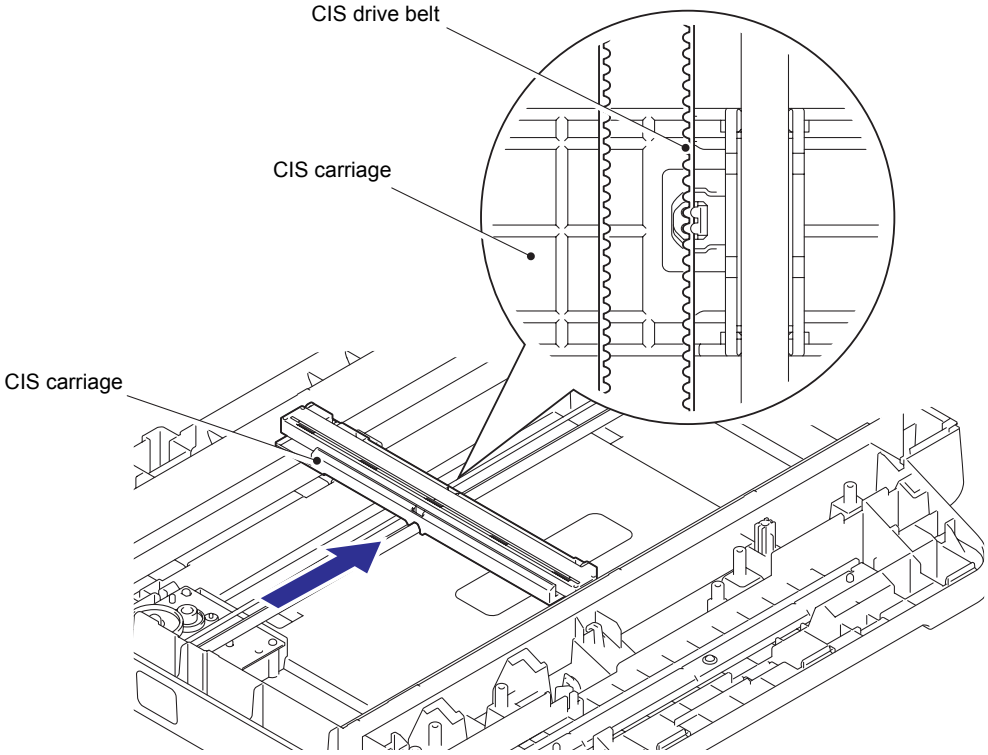

Fig. 3-84

(5) Remove the first side CIS flat cable from the CIS carriage.

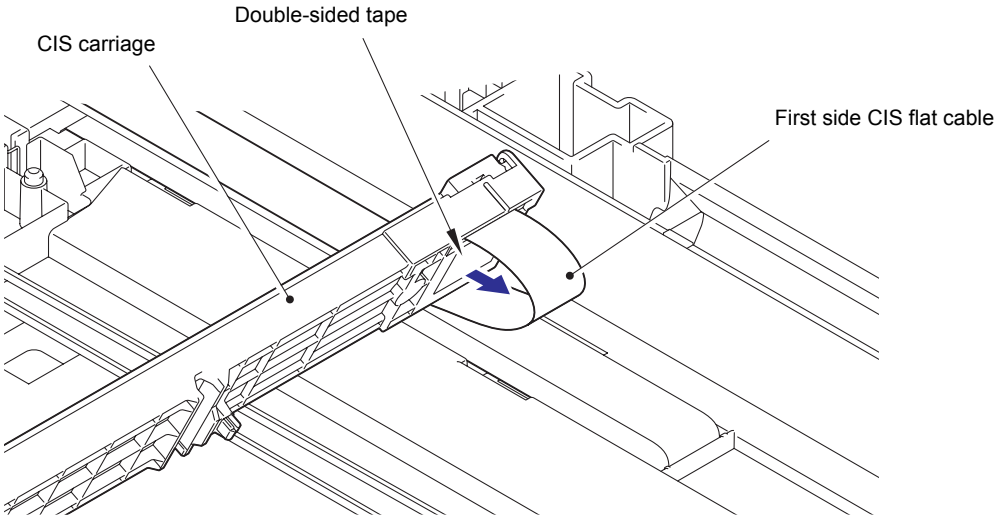

Fig. 3-85

Note:

- The first side CIS flat cable is secured to the CIS carriage with double-sided tape. When the first side CIS flat cable is removed from the tape even once, replace it with new tape.

(6) Raise the first side CIS unit from the CIS carriage for 90 degrees, and slide the first side CIS unit in the direction of the arrow to remove it. Remove the first side CIS flat cable from the first side CIS unit.

(7) Pull out the first side CIS flat cable from the CIS carriage, and remove it from the document scanner bottom cover ASSY.

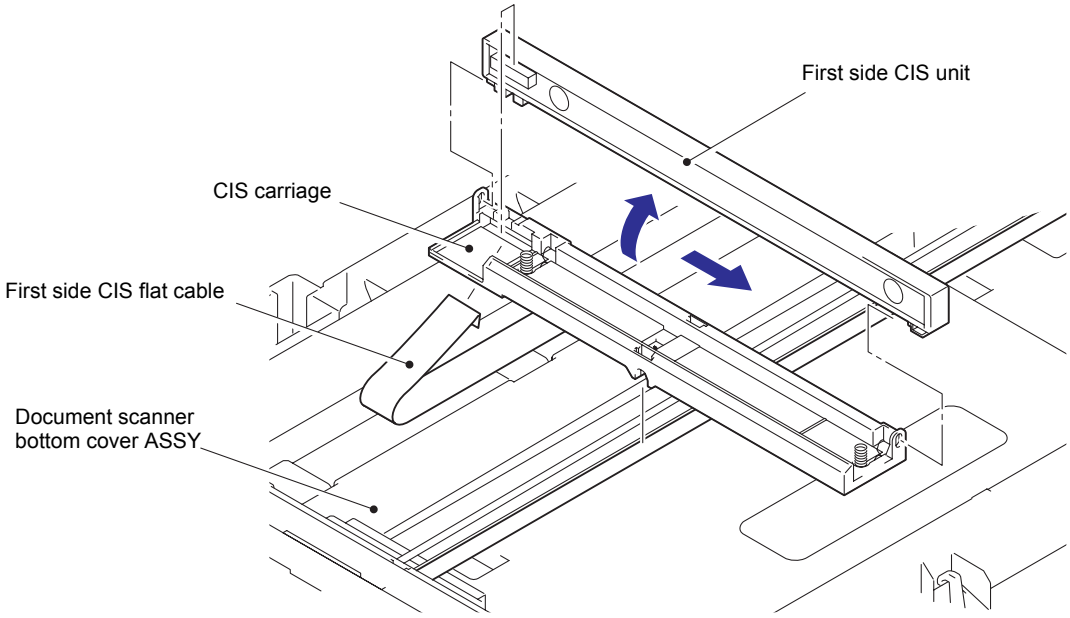

Fig. 3-86

Assembling Note:

- The first side CIS flat cable may have been damaged when the first side CIS unit was replaced. Be sure to replace the first side CIS flat cable with a new one. Follow the procedure below to attach the new first side CIS flat cable.

<Attachment Procedure>

1) Fold the first side CIS flat cable as shown in the illustration below.

Legal models

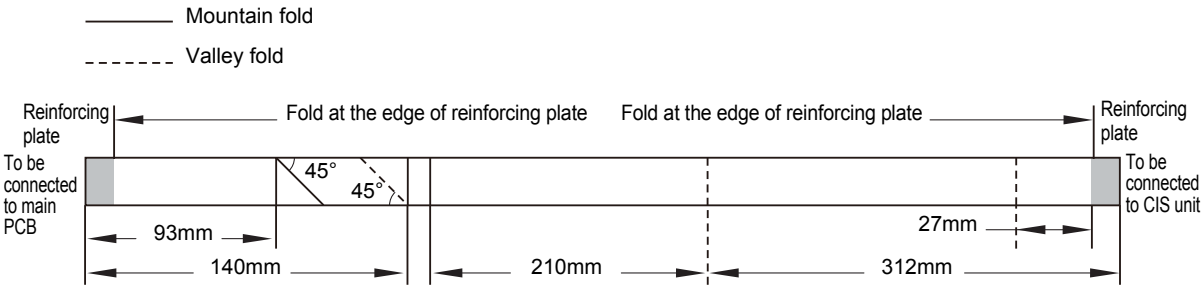

Fig. 3-87

A4 models

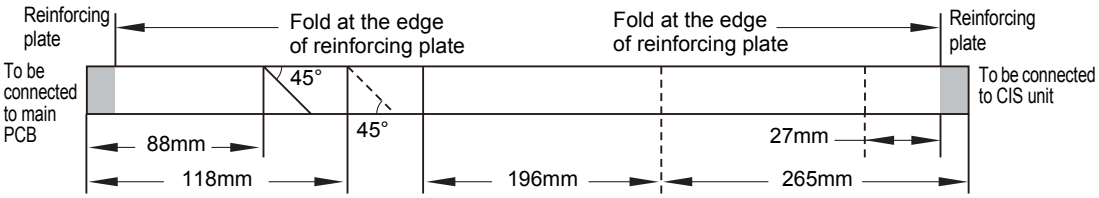

Fig. 3-88

2) Attach the four pieces of 12 mm x 12 mm double-sided tape to the document scanner bottom cover ASSY, as shown in the illustration below for the positions.

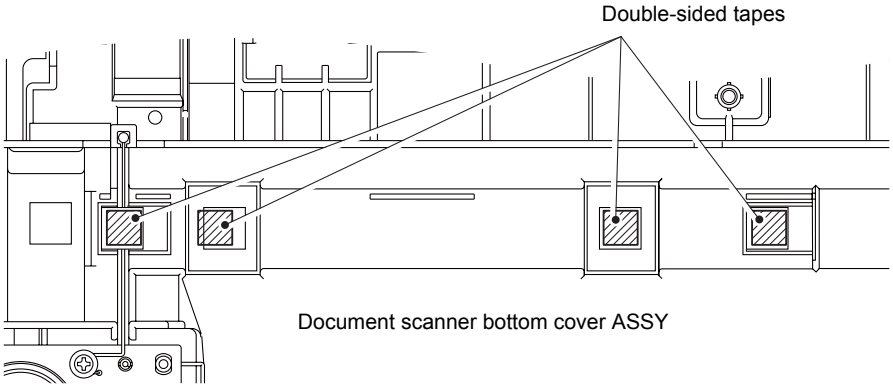

Fig. 3-89

3) Attach the 12 mm x 12 mm double-sided tape to the CIS carriage, as shown in the illustration below for the position.
4) Insert the first side CIS flat cable into the first side CIS unit.
5) Attach the first side CIS unit to the CIS carriage.
6) Peel the release liner of the double-sided tape attached to the CIS carriage, and secure the first side CIS flat cable to the tape as shown in the illustration below.

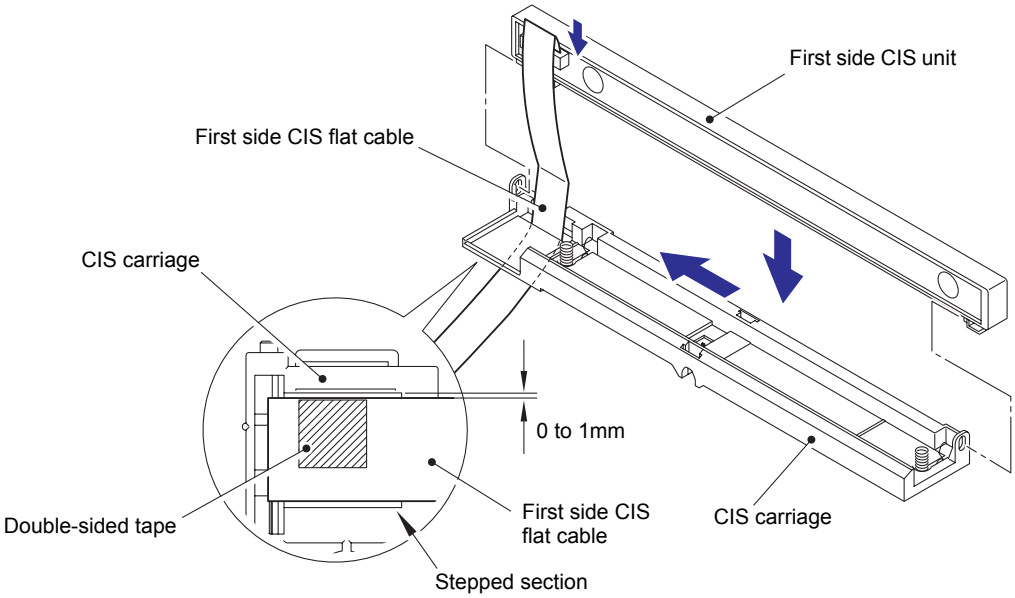

Fig. 3-90

Confidential

7) Pass the first side CIS flat cable through the two flat cores.

8) Peel the release liner of the four pieces of double-sided tape attached to the document scanner bottom cover ASSY, and secure the first side CIS flat cable to the tape as shown in the illustration below.

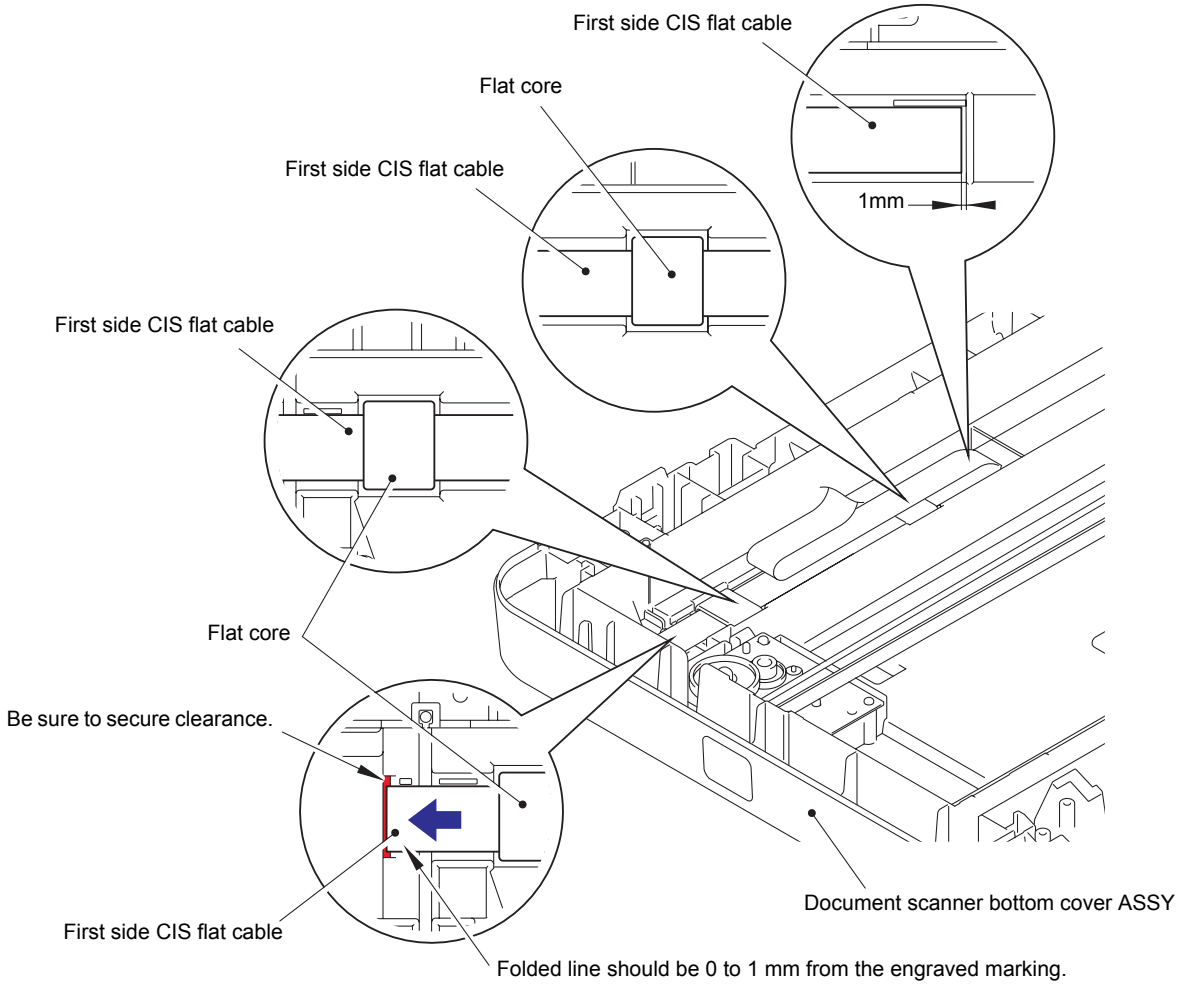

Fig. 3-91

9.12 Joint cover

(1) Remove the screw pan M4x8, washer spring 2-4, washer 5 to remove the NCU earth harness from the machine, and release the NCU earth harness from the securing fixtures.

(2) Disconnect the wireless LAN harness, USB host harness, speaker harness, and NCU harness from the main PCB.

(3) Pull out the wireless LAN harness and the USB host harness from the main PCB shield calking ASSY.

(4) Remove the taptite cup S M3x8 SR screw and taptite bind B M4x12 screw one at a time to remove the earth plate.

> *1 For touch panel models, the taptite bind B M4x12 screw has already been removed on earlier process.
>
> *2 South Korean models are not equipped with the earth plate, taptite cup S M3x8 SR screw, and taptite bind B M4x12 screw.

(5) Remove the four taptite bind B M4x12 screws.

(6) Release the six hooks, and slide the joint cover in the direction of the arrow to remove it.

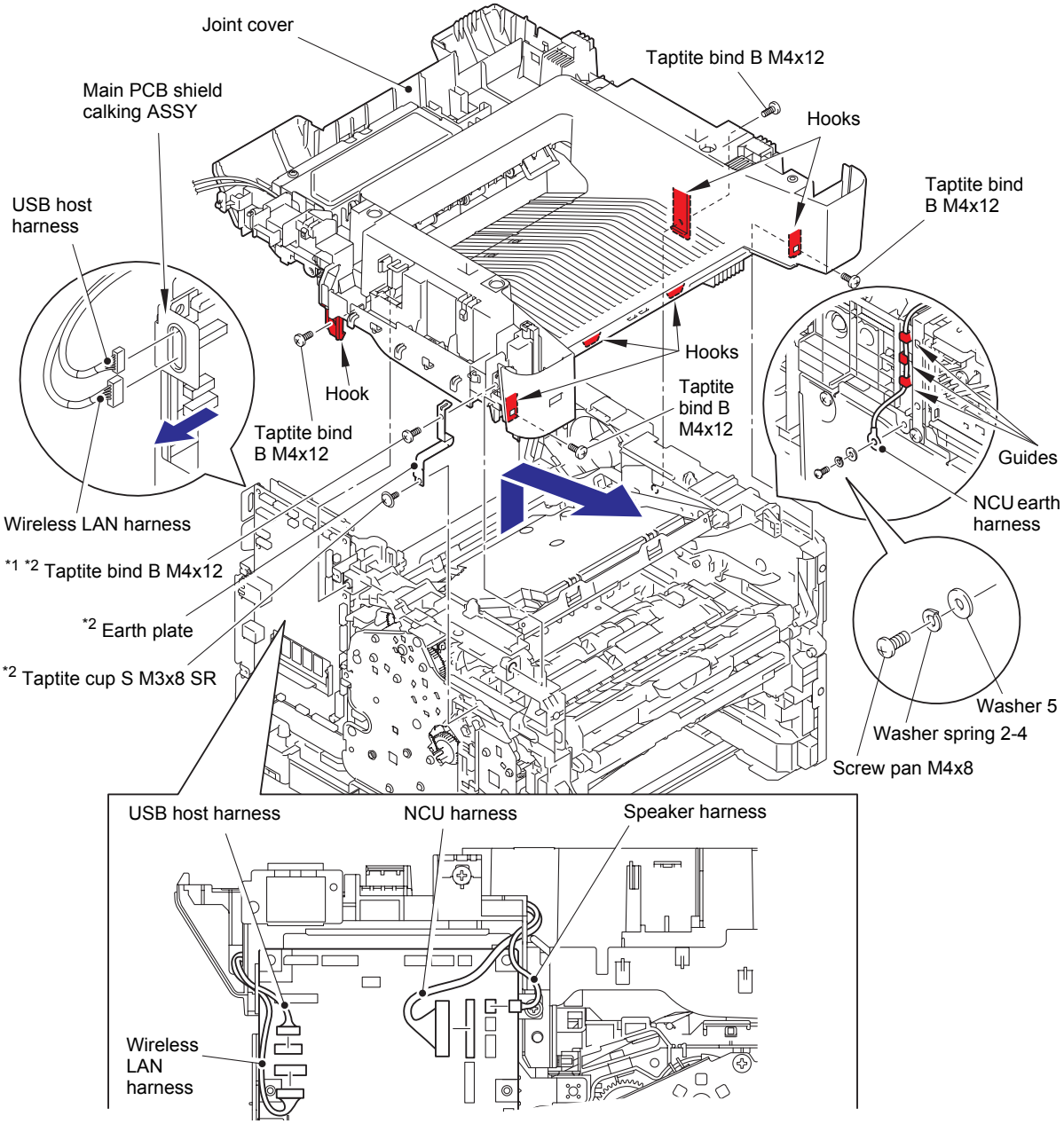

Fig. 3-92

Harness routing: Refer to "1.Main PCB ASSY" and "11.Main frame R" .

9.13 Wireless LAN PCB ASSY

(1) Release the hook, and remove the wireless LAN PCB ASSY from the joint cover. Release the wireless LAN harness from the securing fixtures.

(2) Remove the wireless LAN harness from the wireless LAN PCB ASSY.

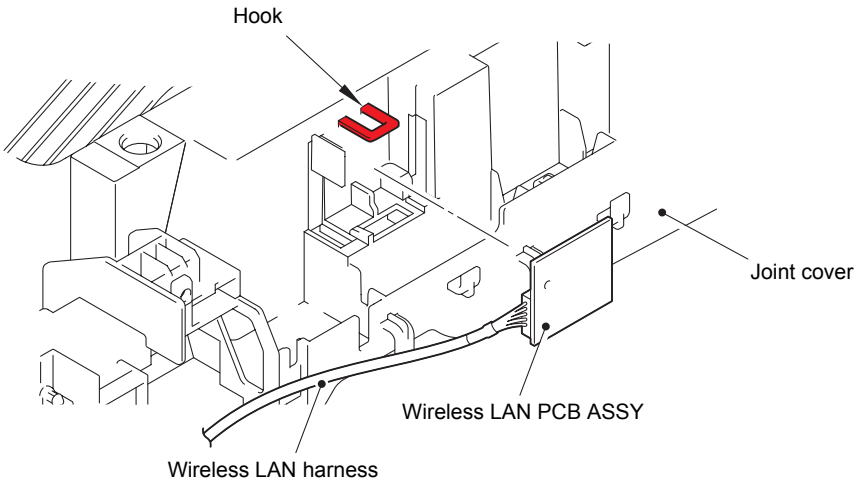

Fig. 3-93

Harness routing: Refer to "9.Wireless LAN PCB ASSY / USB host PCB ASSY".

9.14 USB host PCB ASSY

(1) Remove the two taptite bind B M4x12 screws to remove the USB host PCB ASSY from the joint cover, and release the USB host harness from the securing fixtures.

(2) Disconnect the USB host harness from the USB host PCB ASSY.

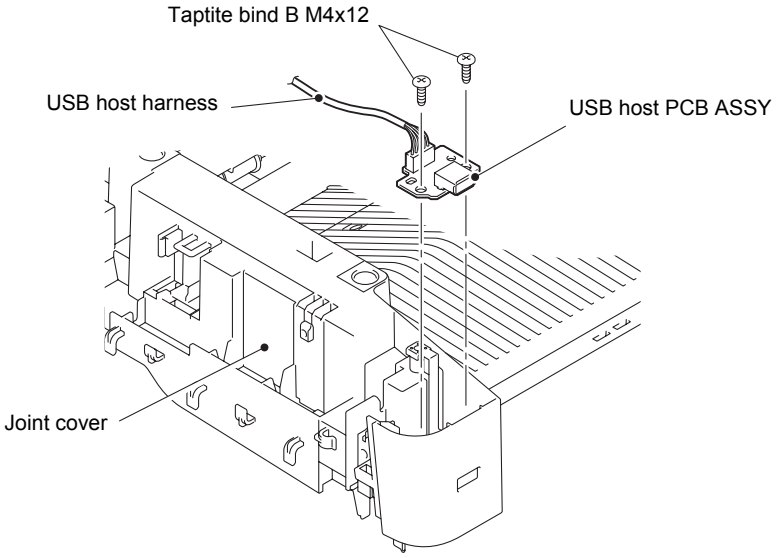

Fig. 3-94

Harness routing: Refer to "9.Wireless LAN PCB ASSY / USB host PCB ASSY".

9.15 Speaker unit

(1) Release the hook, and remove the speaker hold spring from the joint cover.

(2) Remove the speaker unit from the joint cover, and release the speaker harness from the securing fixtures.

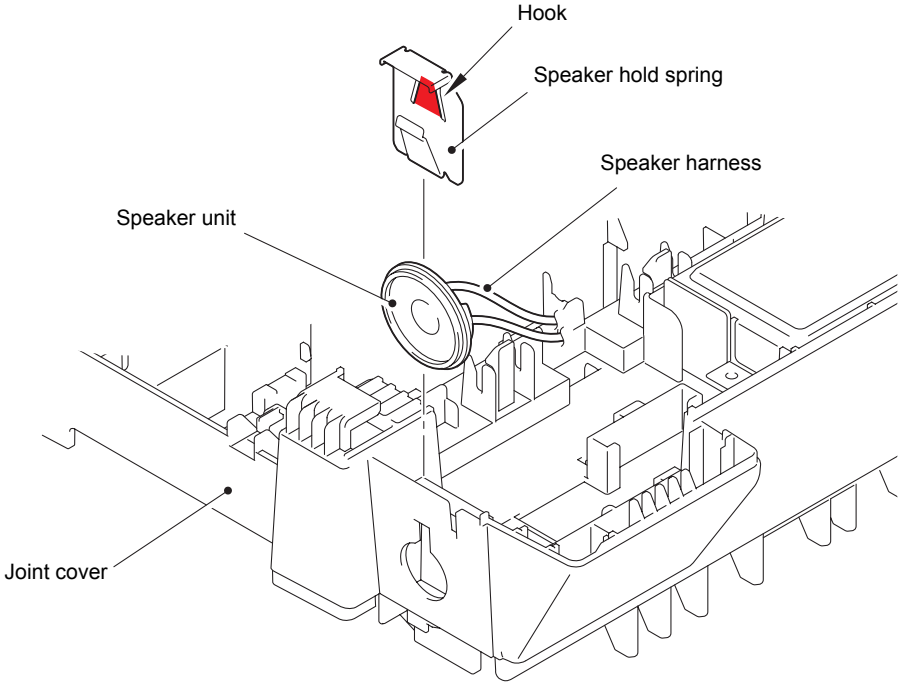

Fig. 3-95

Harness routing: Refer to "8.NCU PCB ASSY / Speaker unit".

9.16 NCU PCB ASSY

(1) Remove the screw pan (S/P washer) M3.5x6 DA screw and washer 5 to remove the NCU earth harness. Release the NCU harness and the NCU earth harness from the securing fixtures.

(2) Remove the two taptite bind B M4x12 screws to remove the NCU unit from the joint cover.

(3) Remove the screw pan (S/P washer) M3.5x6 DA screw and washer 5 to remove the NCU shield cover.

(4) Remove the two taptite cup S M3x6 SR screws to remove the NCU PCB ASSY.

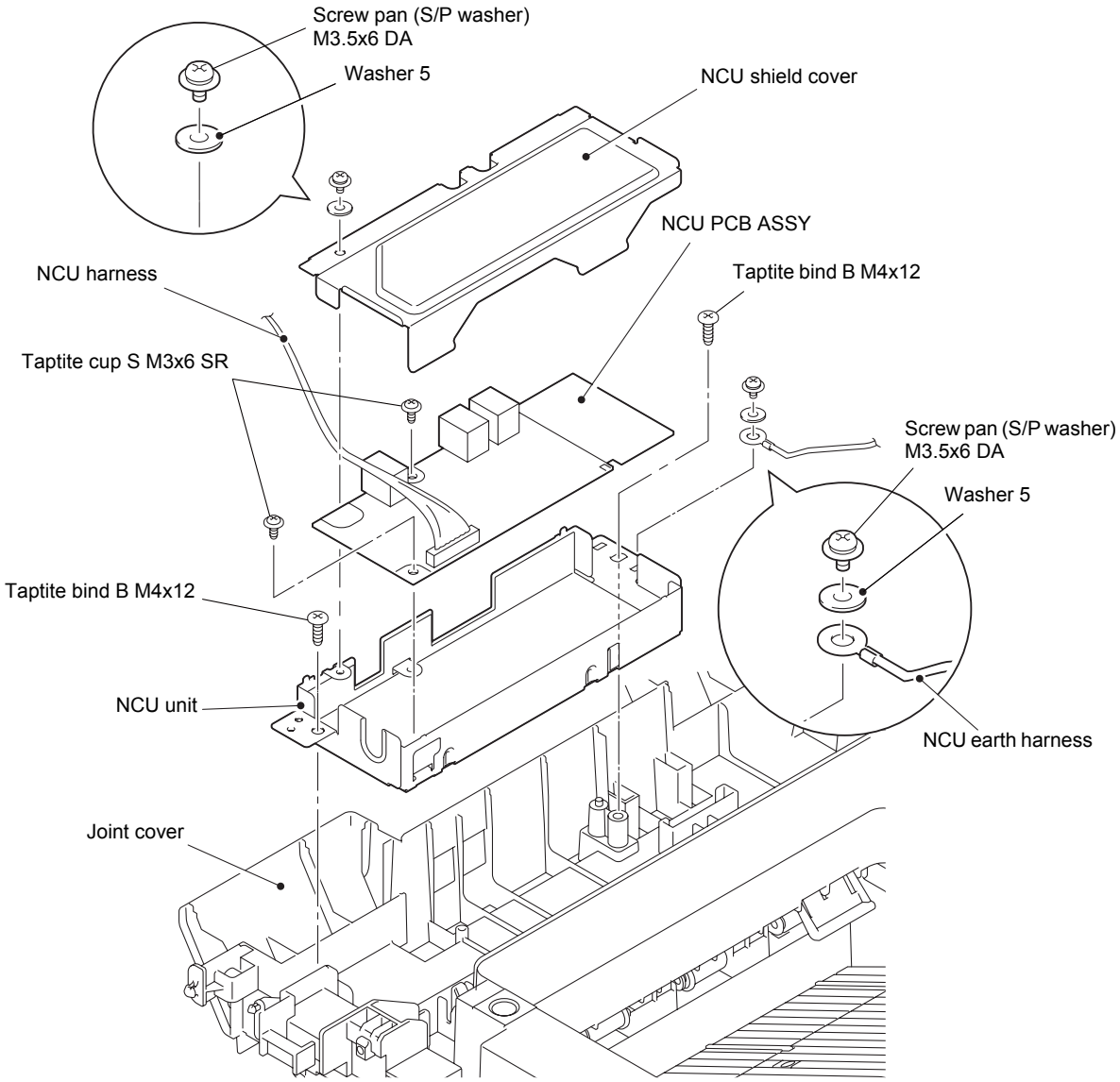

Fig. 3-96

Harness routing: Refer to "8.NCU PCB ASSY / Speaker unit".

9.17 Main PCB ASSY

(1) Disconnect all harnesses and flat cables from the main PCB ASSY.

Note:

- After disconnecting the flat cable(s), check that the end of each cable is not damaged or short-circuited.
- When connecting the flat cable(s), insert it straight. After insertion, check that the cable is not at an angle.

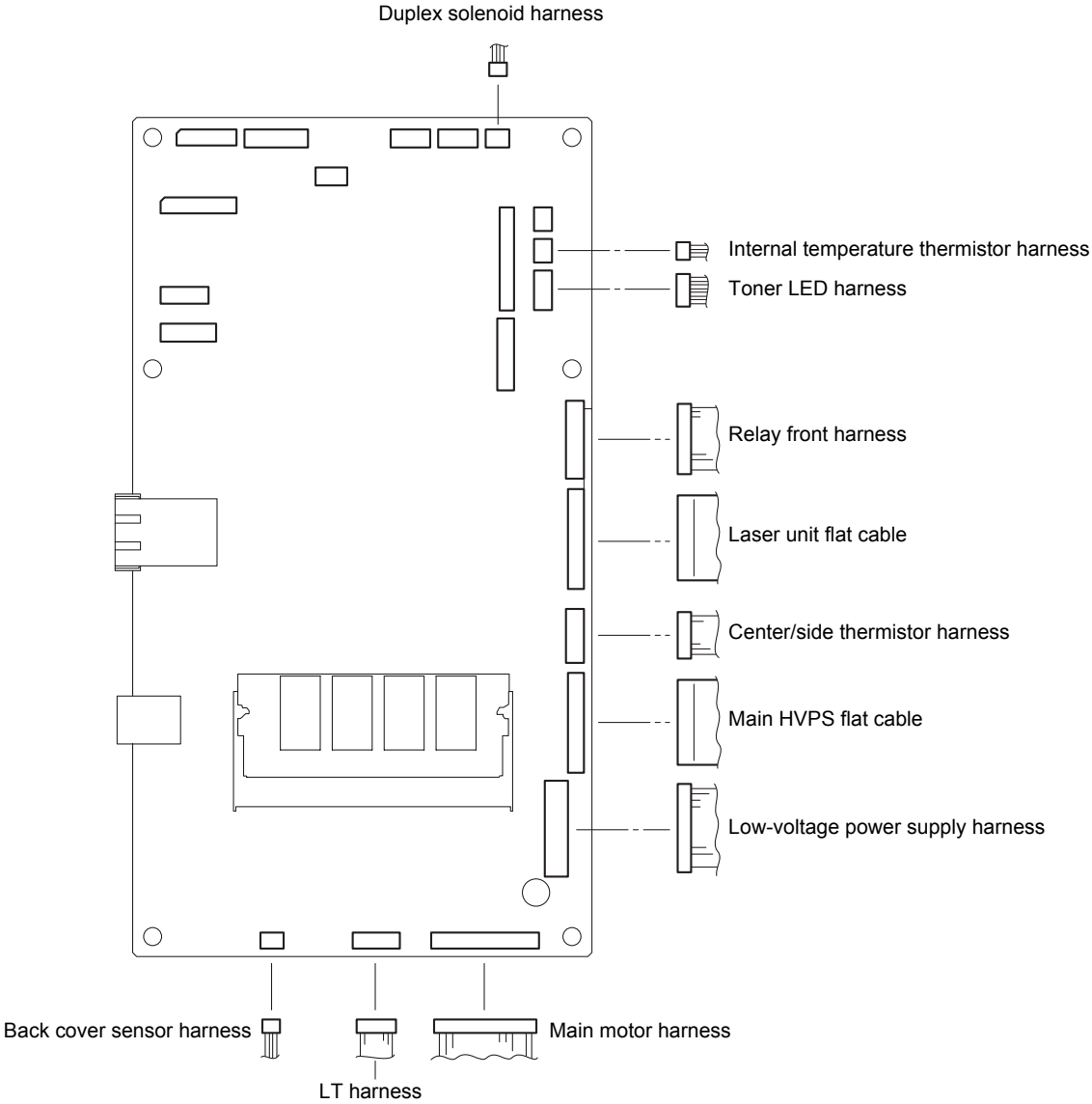

Fig. 3-97

Harness routing: Refer to "1.Main PCB ASSY".

(2) Remove the six taptite cup S M3x8 SR screws to remove the main PCB ASSY from the machine.

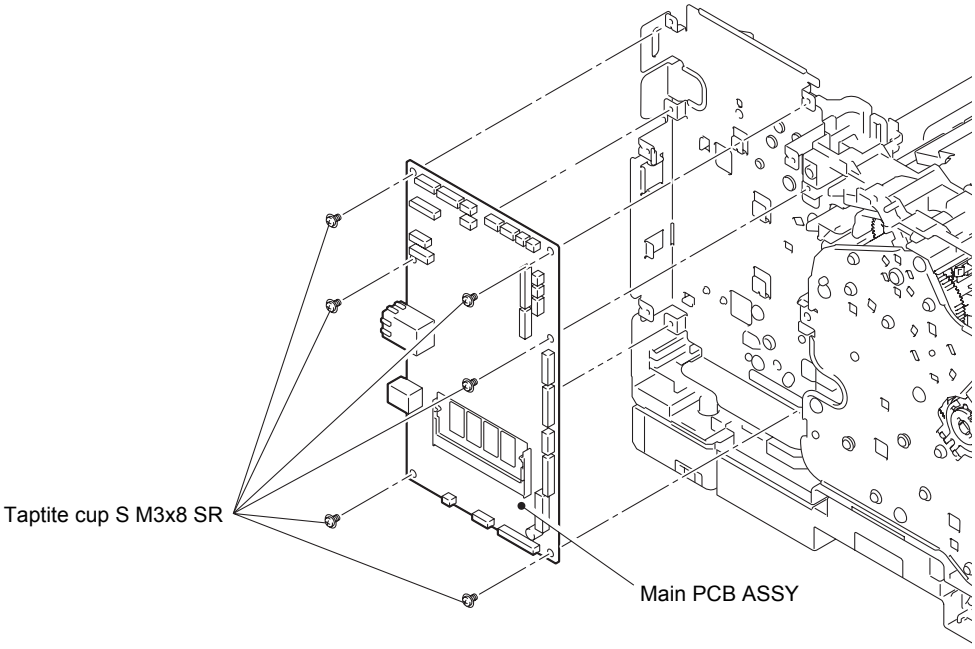

Fig. 3-98

9.18 Fuser unit

CAUTION

Some parts inside the machine are extremely hot immediately after the machine is used. When opening the front cover ASSY or back cover to access any parts inside the machine, never touch the shaded parts shown in the following figures.

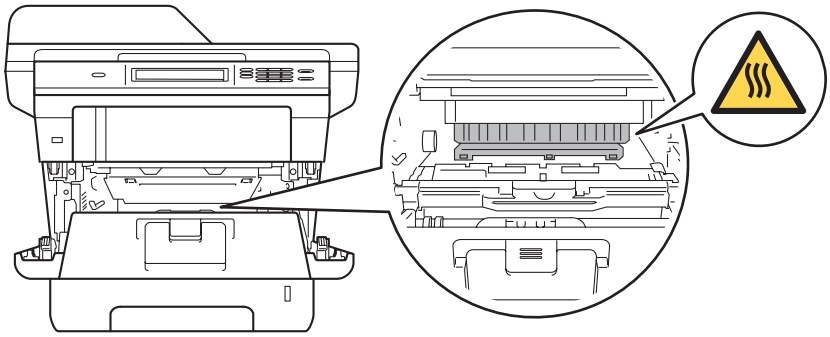

Note:

- When removing the fuser unit while the front cover is attached, keep the front cover closed.

(1) Remove the taptite bind B M4x12 screw, and release the hook to remove the fuser unit line cover R from the machine.

(2) Remove the rear nip release link from the machine.

Note:

- Make sure that the front cover is open when removing the rear nip release link.

(3) Remove the taptite pan B M4x14 screw, and release the hook to remove the fuser unit line cover L from the machine.

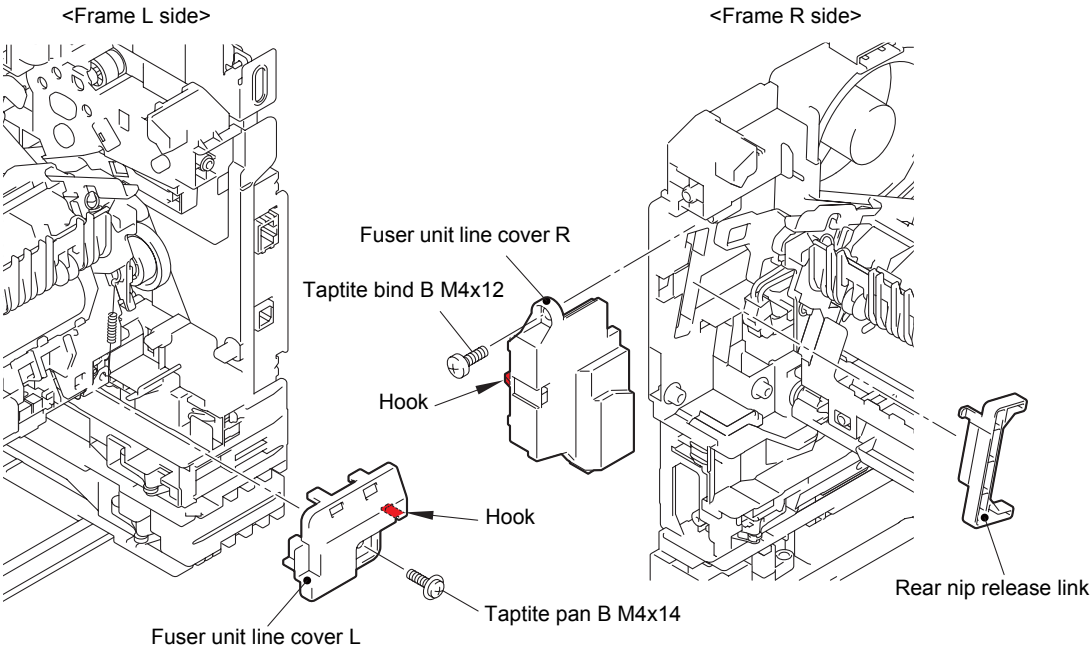

Fig. 3-99

(4) Release the heater harness of the fuser unit from the guide on the main frame R, and disconnect the heater harness from the low-voltage-heater harness.

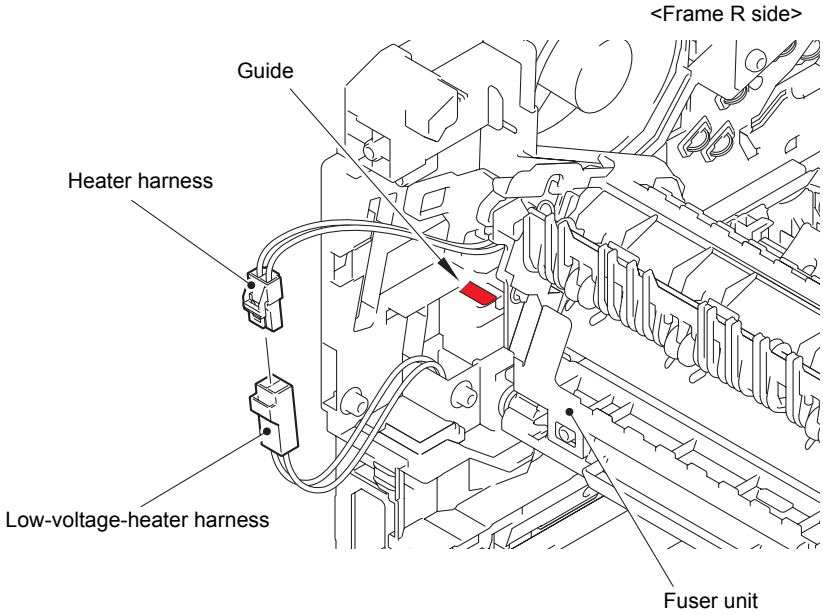

Fig. 3-100

Harness routing: Refer to "3.Fuser unit".

(5) Remove the fuser unit earth spring from the fuser unit.

(6) Release the center thermistor harness and the side thermistor harness of the fuser unit from the guide, and disconnect these harnesses from the eject sensor PCB ASSY.

Note:

- When disconnecting the harness, hold the top of the PCB connector to prevent the PCB connector being damaged.

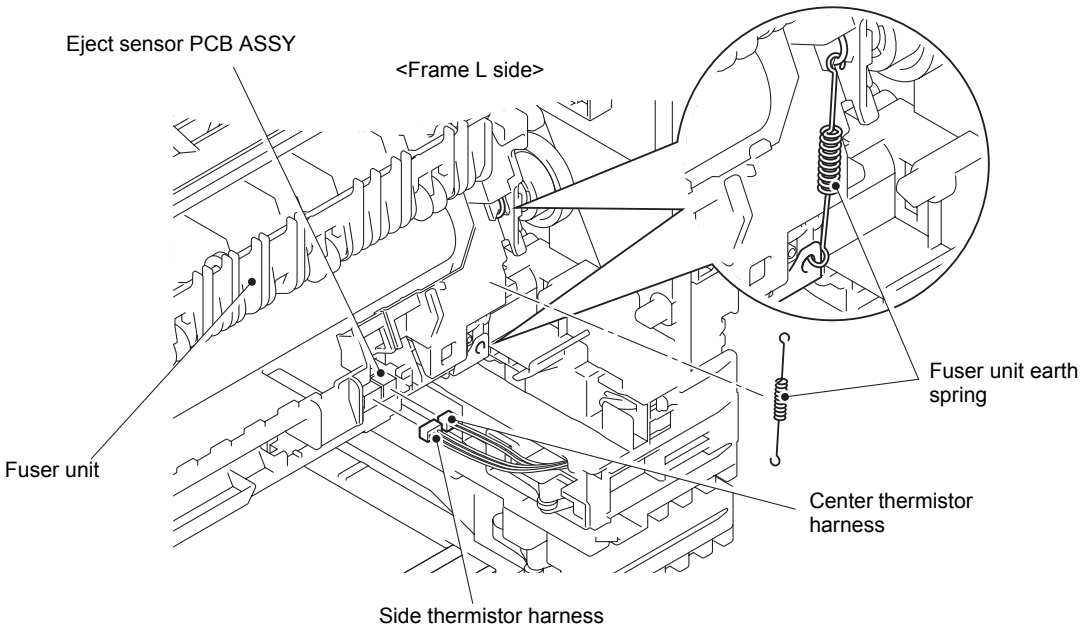

Fig. 3-101

Harness routing: Refer to "3.Fuser unit".

(7) Remove the taptite pan B M4x14 screw, and remove the fuser unit from the machine.

Note:
- Make sure that the front cover is closed when removing the fuser unit.

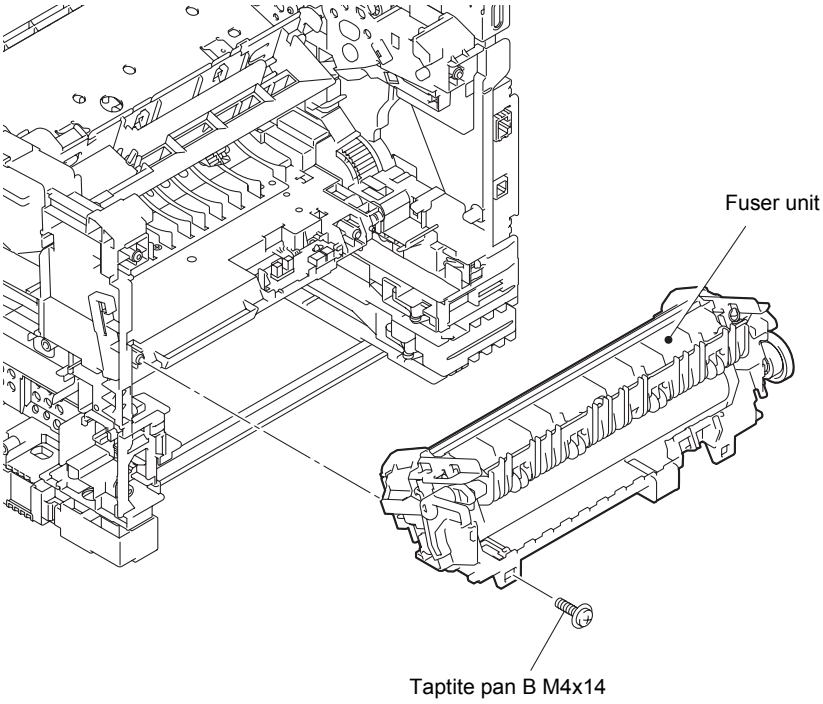

Fig. 3-102

Assembling Note:
- Check that the heater harness is housed in frame L as shown in the illustration below. Otherwise the harness may be caught in some sections of the machine, and may catch fire.

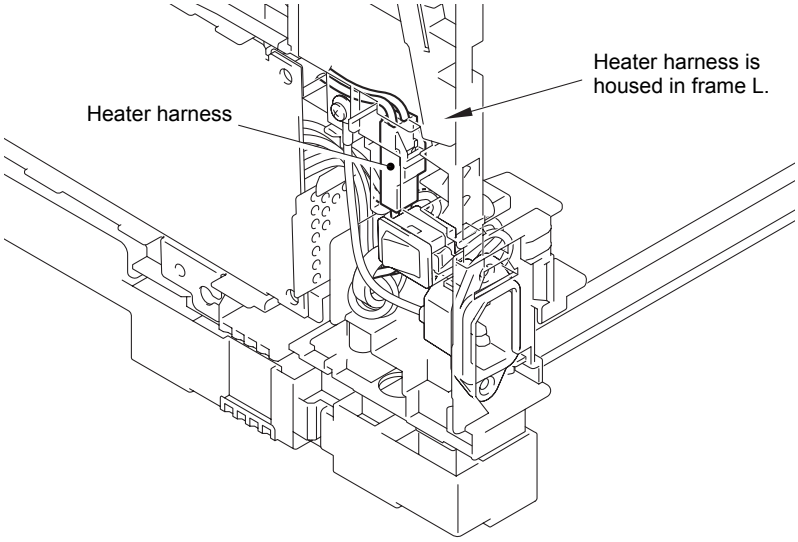

Fig. 3-103

9.19 Laser unit

(1) Disconnect the laser unit flat cable from the laser unit.

(2) Remove the four taptite cup S M3x8 SR screws, and remove the laser unit from the machine.

Note:
- Be careful not to touch the lens of the laser unit.

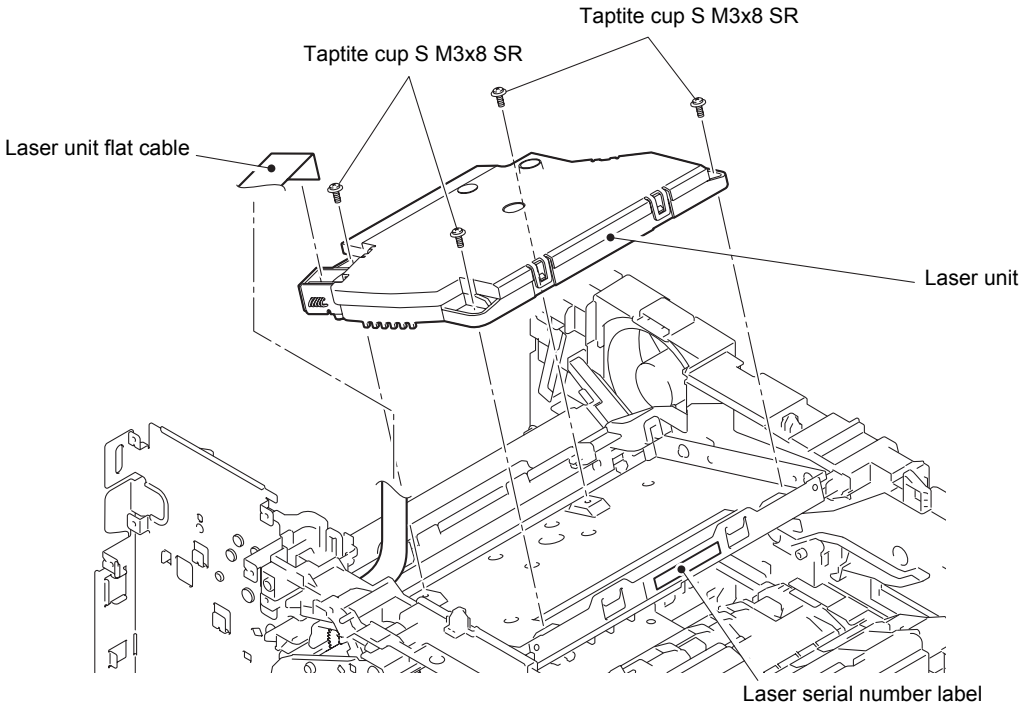

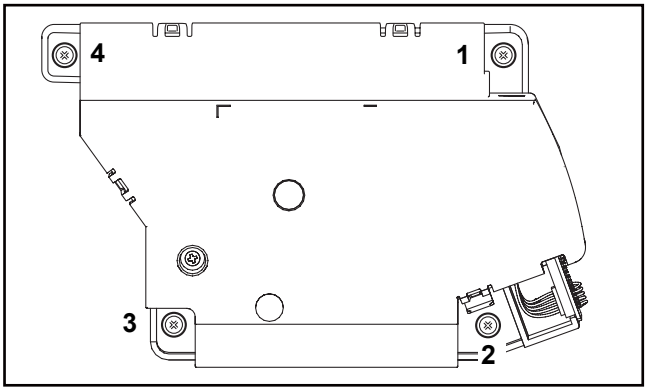

Fig. 3-104

Harness routing: Refer to “1.Main PCB ASSY” and “6.Laser unit” .

Assembling Note:
- When attaching the laser unit, tighten the screws in the following order: upper right, lower right, lower left and upper left.
- When connecting the flat cable(s), insert it straight. After insertion, check that the cable is not at an angle.

Assembling Note:

- There are two types of laser unit that can be ordered as a spare part.
  (SJ type and SM type)
  When replacing the laser unit, be sure to order and assemble the same type of the laser unit that was attached to the machine.

<How to identify the type of laser unit and the position of label>

Check the first two characters of the laser serial number label.

- SJ type : SJxxxxxxVXXYY
- SM type: SMxxxxxxVXXYY

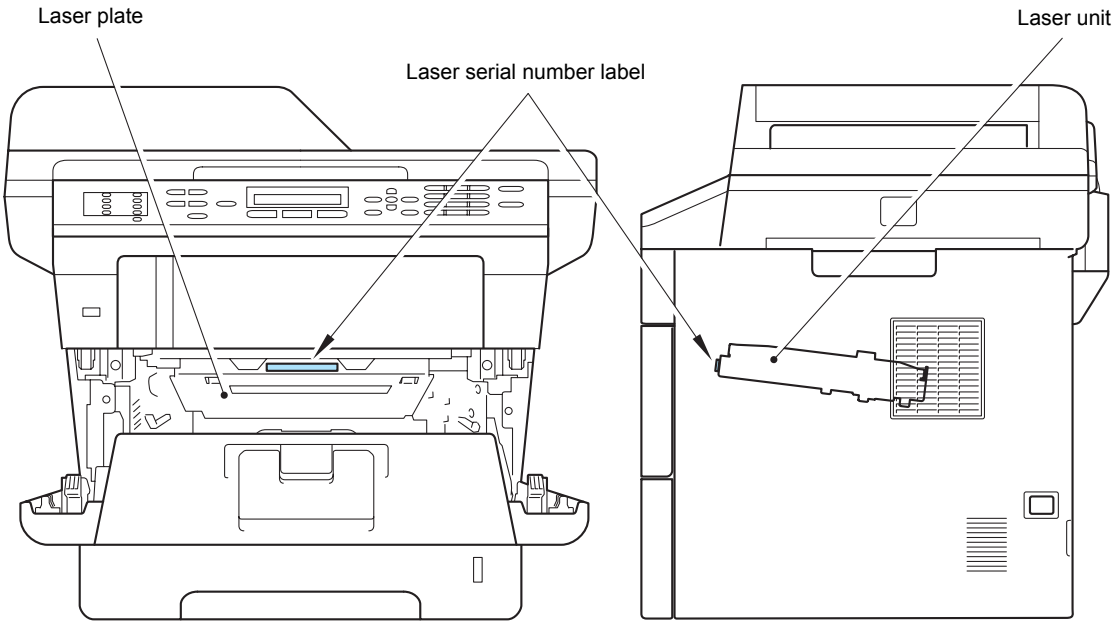

Fig. 3-105

Assembling Note:

- Attach the laser serial number label as shown in the figure (on laser plate) above after replacing the laser unit.

9.20 Low-voltage power supply PCB ASSY

(1) Remove the two taptite cup S M3x8 SR screws, and remove the scanner earth plate from the machine.

(2) Remove the three taptite cup S M3x8 SR screws, taptite bind B M4x12 screw and screw pan M4x8, washer spring 2-4, washer 5 to remove the LV shield plate cover from the machine.

(3) Remove the LVPS insulation sheet (small, black) and the LVPS insulation sheet (big, semi-transparent) from the machine.

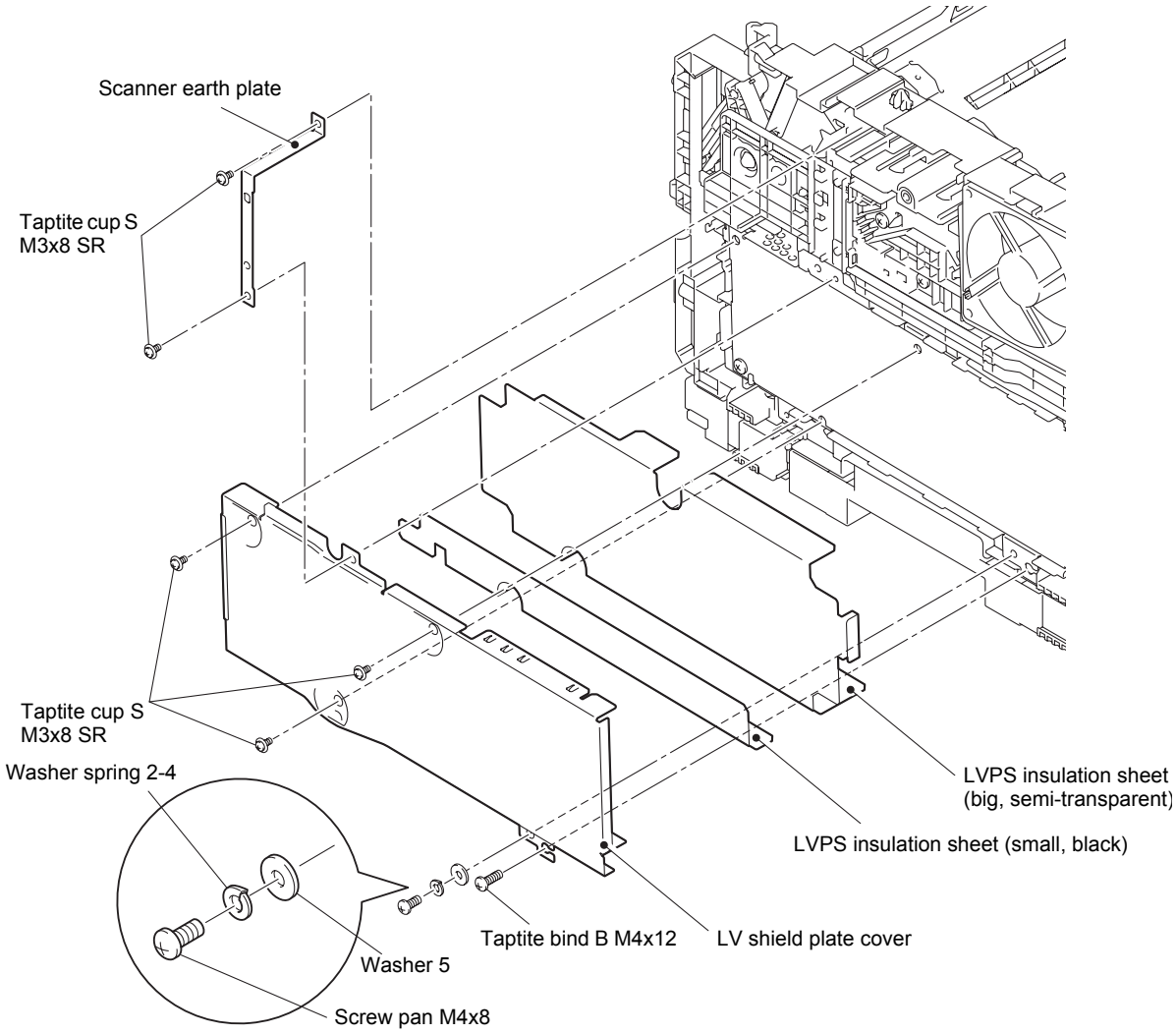

Fig. 3-106

(4) Remove the taptite flat B M3x10 screw from the inlet.

(5) Remove the screw pan M4x8, washer spring 2-4, washer 5, and remove the earth harness from the machine.

(6) Remove the inlet and the power switch from the machine.

Note:

- When removing the power switch, use a flathead screwdriver or similar tool to lift the edge of the power switch to remove it.

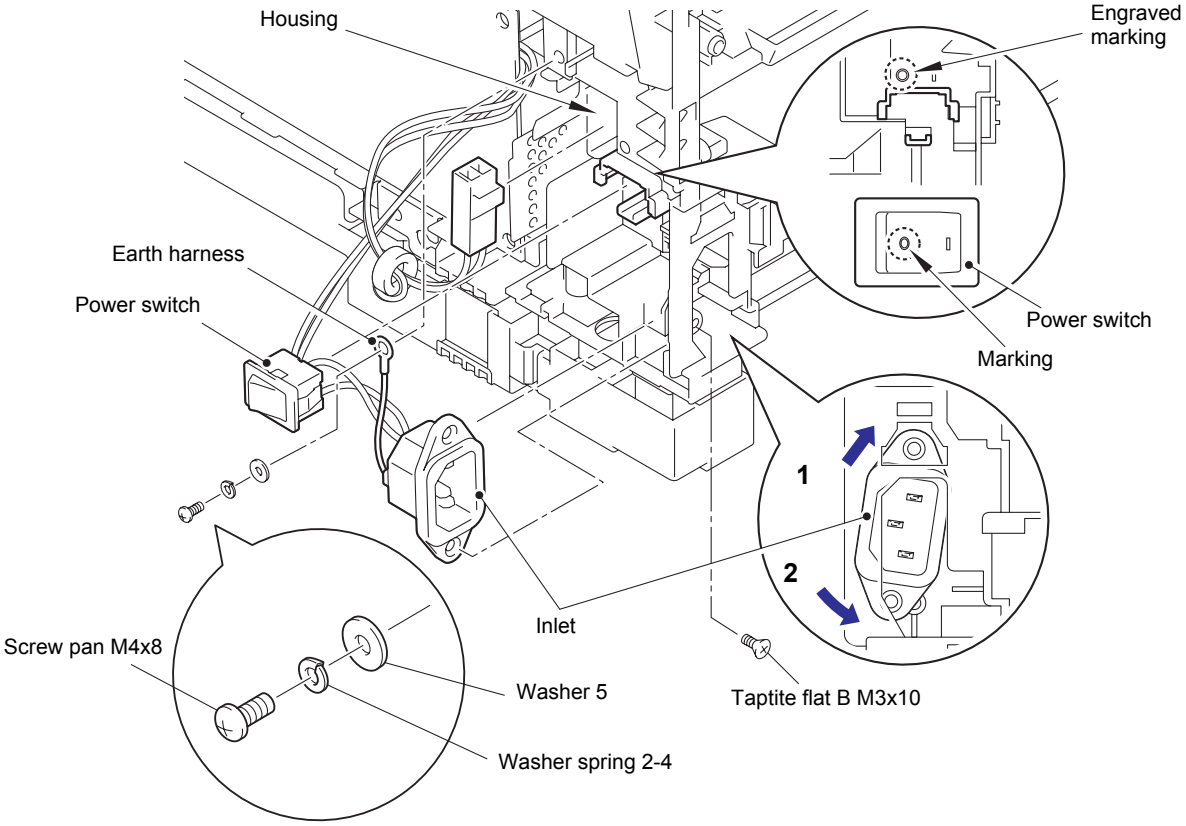

Fig. 3-107

Assembling Note:

- When attaching the power switch, align the marking on the power switch with the engraved marking on the machine.
- Attach the inlet as shown in the illustration above.
- Insert the inlet harness into the housing of the machine.

(7) Remove the taptite cup S M3x8 SR screw and the two taptite bind B M4x12 screws to remove the low-voltage power supply PCB ASSY from the machine, and disconnect the low-voltage power supply harness from the low-voltage power supply PCB ASSY.

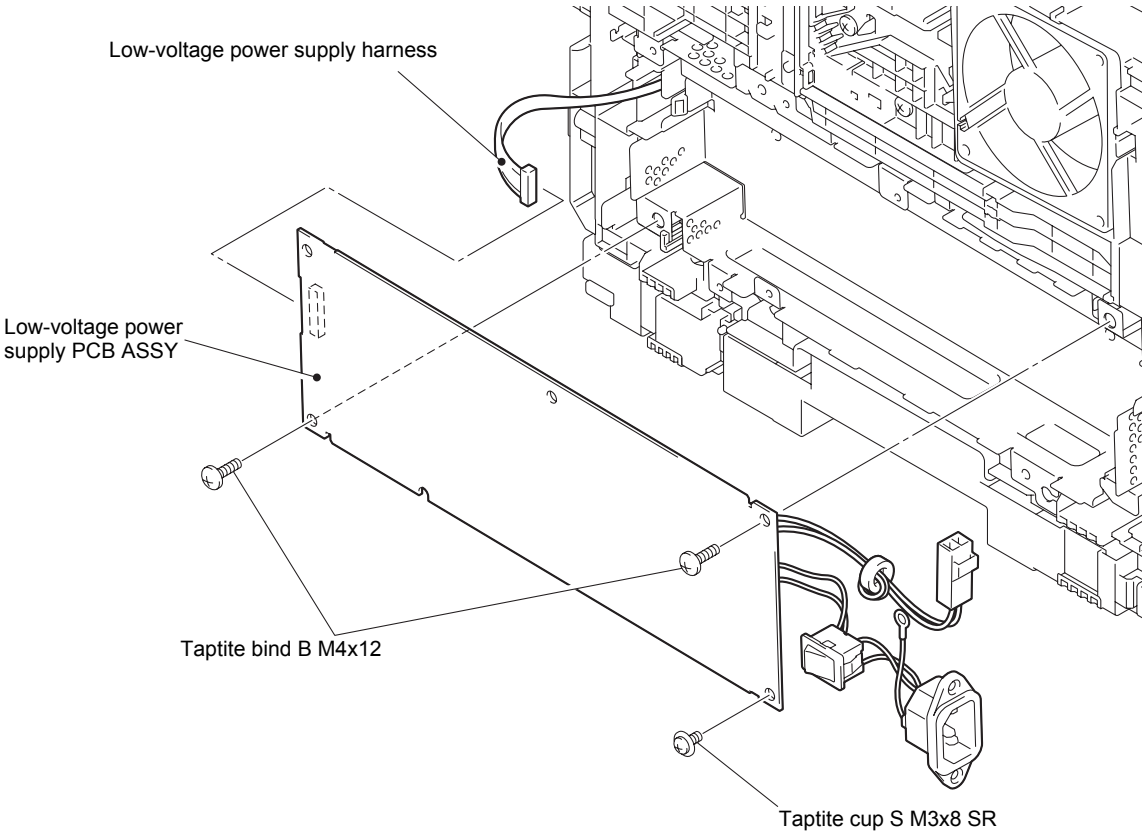

Fig. 3-108

Assembling Note:

- When attaching the low-voltage power supply PCB ASSY, engage the notch on the low-voltage power supply PCB ASSY with the hook on the machine as shown in the illustration below.
- Check that the heater harness is housed in frame L as shown in the illustration below. Otherwise the harness may be caught in some sections of the machine, and may catch fire.

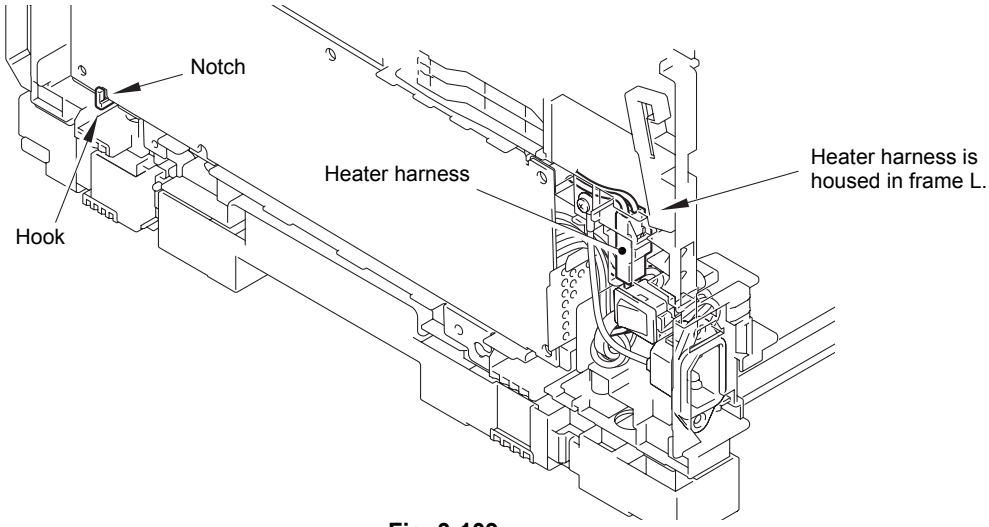

Fig. 3-109

9.21 Toner LED PCB ASSY

(1) Remove the LV shield plate earth spring from the LV shield plate and the machine.

(2) Remove the taptite cup S M3x8 SR screw, and lift the under bar earth plate R from the LV shield plate.

(3) Remove the taptite bind B M4x12 screw, and release the two hooks to remove the LV shield plate from the machine.

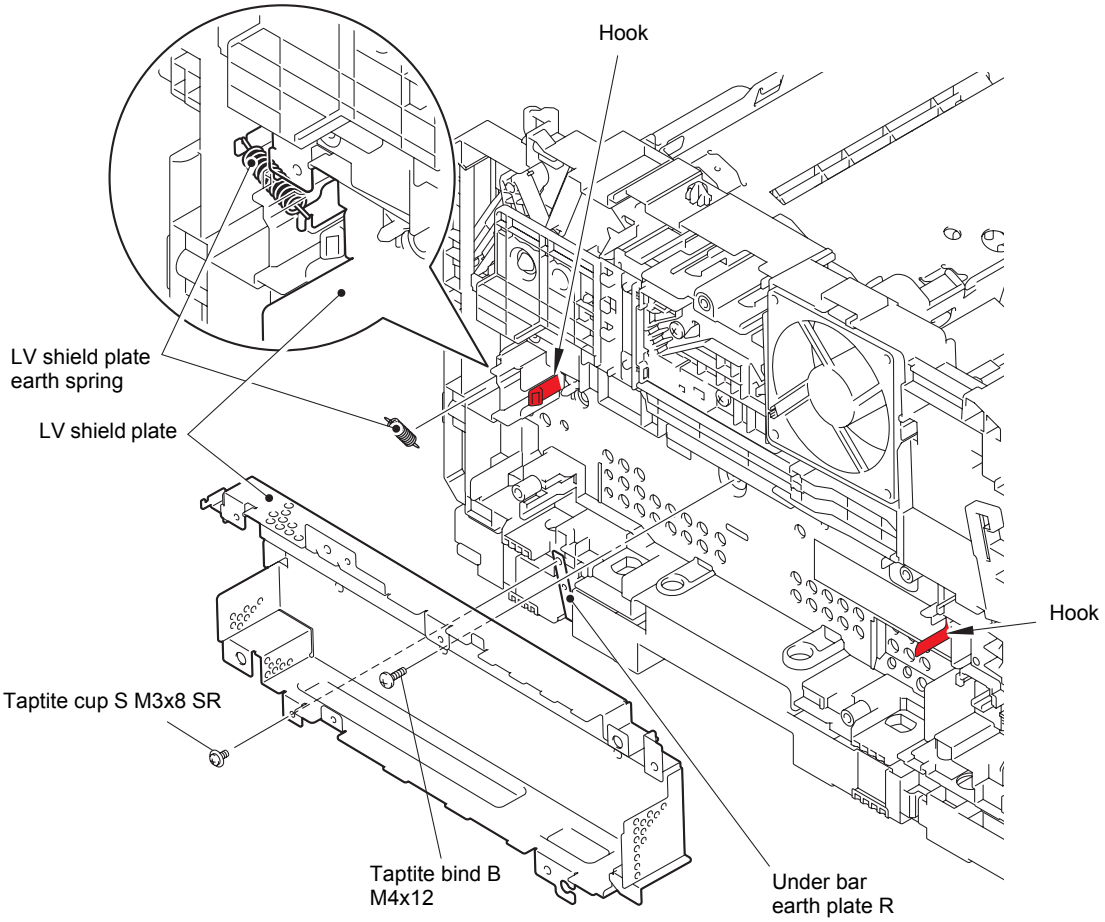

Fig. 3-110

Confidential

(4) Remove the taptite bind B M4x12 screw, and release the hook to open the back side of the hold cover 1. Then remove the hold cover 1 from the machine in the direction of the arrow.

(5) Release the toner LED harness from the securing fixtures.

(6) Remove the taptite pan B M3x8 screw, and pull out "A" on the pinch earth spring from the toner LED PCB ASSY. Release the two hooks, disconnect the main fan harness from the toner LED PCB ASSY while lifting the toner LED PCB ASSY, and remove the toner LED PCB ASSY from the machine.

(7) Remove the pinch earth spring from the machine.

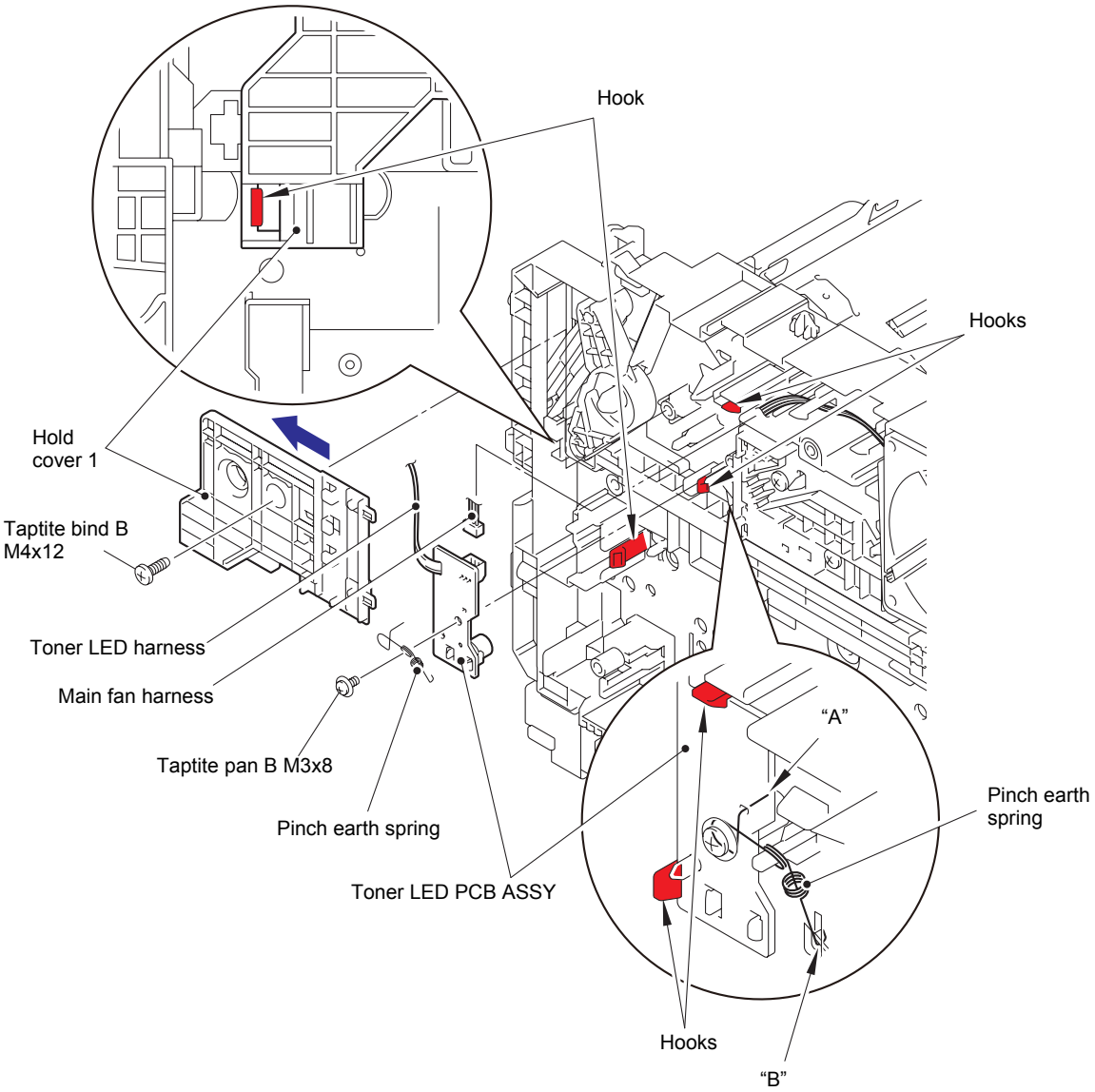

Fig. 3-111

Harness routing: Refer to "1.Main PCB ASSY" and "5.Toner LED PCB ASSY/Main fan".

Assembling Note:

- Engage "B" on the pinch earth spring with the spring on the machine.

9.22 Main fan

(1) Slide the straight cam in the direction of arrow 1a to remove the boss on the nip release link from the groove on the straight cam. Then slide the straight cam in the direction of arrow 1b to remove it from the machine.

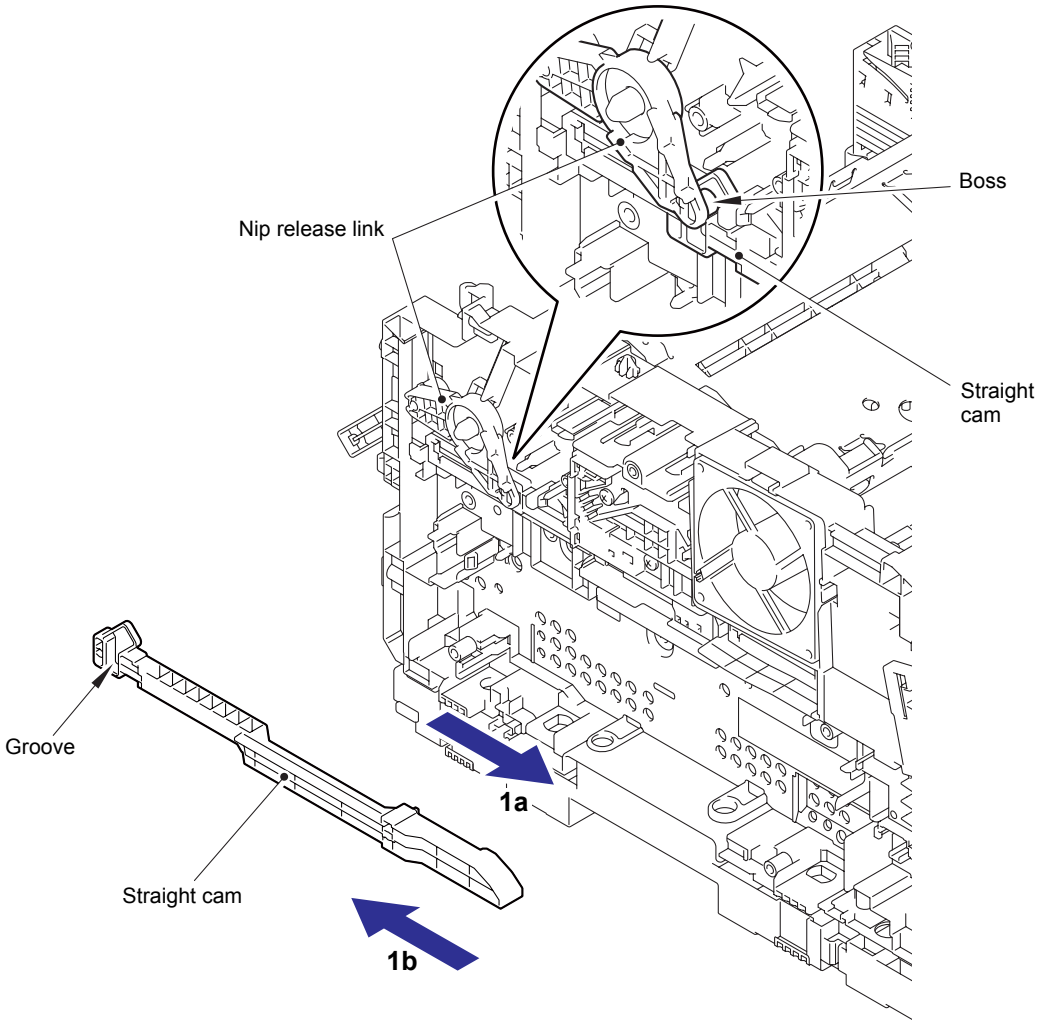

Fig. 3-112

(2) Remove the two taptite bind B M4x12 screws, and release the hook to open the upper side of the hold cover 2.

(3) Release the main fan harness from the securing fixtures, and remove the main fan from the machine.

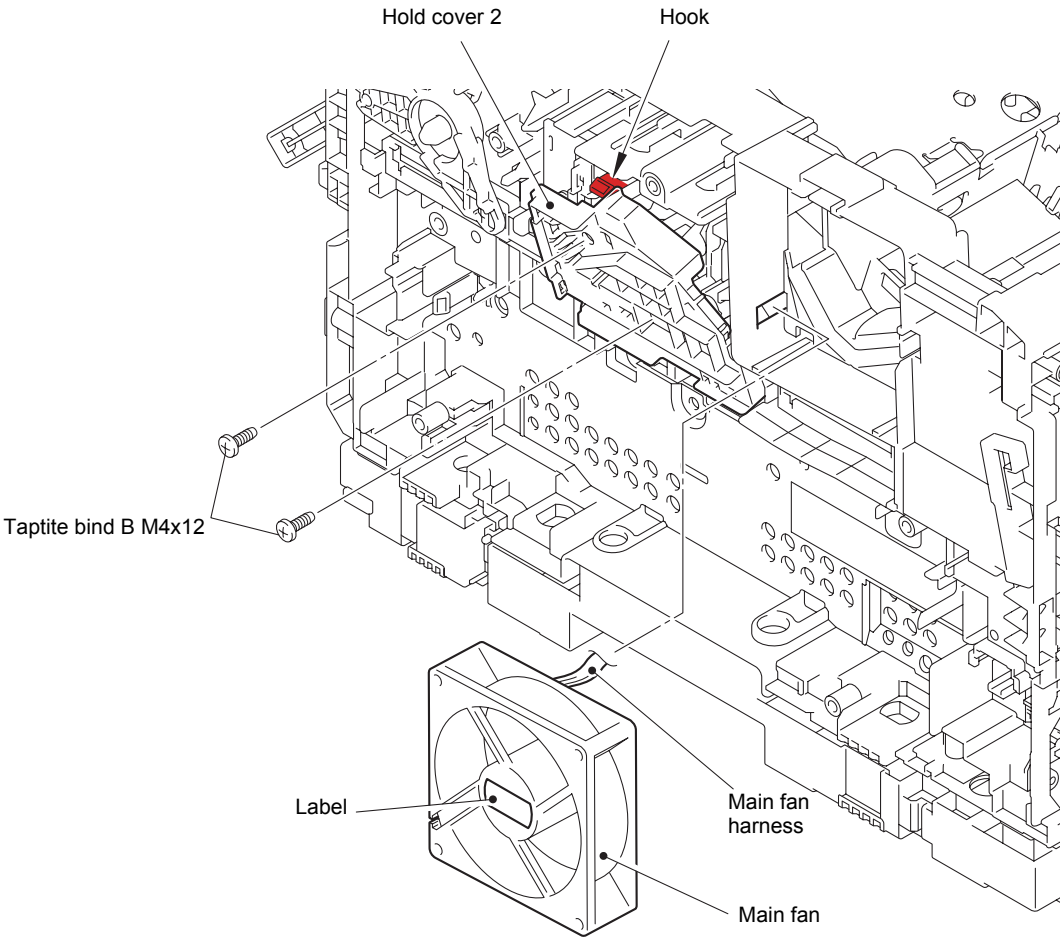

Fig. 3-113

Harness routing: Refer to "5.Toner LED PCB ASSY/Main fan".

Assembling Note:

- Attach the main fan so that the surface with the label faces out.

9.23 Air duct / Filter

(1) Release the hook, and remove the filter from the air duct.

(2) Push the two pins of the air duct to release the pins, and pull the air duct in the direction of the arrow to remove it from the machine.

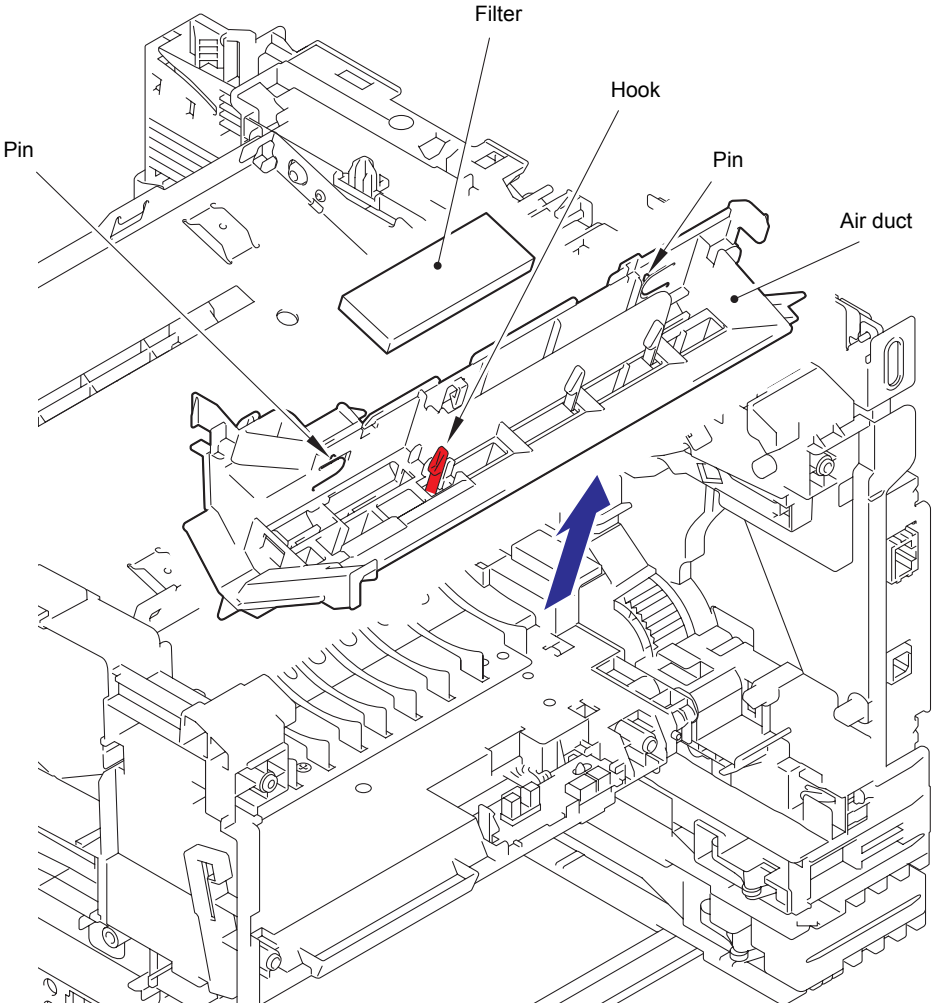

Fig. 3-114

Confidential

9.24 Relay front PCB ASSY

(1) Release the relay front harness from the securing fixtures.

(2) Release the two hooks to remove the front cover sensor from the machine, and then release the front cover sensor harness from the hook.

Note:
- When removing the front cover sensor, push it from the rear to remove it.

(3) Release the two hooks to remove the relay front PCB ASSY from the machine, and release all harnesses from hook A.

(4) Disconnect all harnesses from the relay front PCB ASSY.

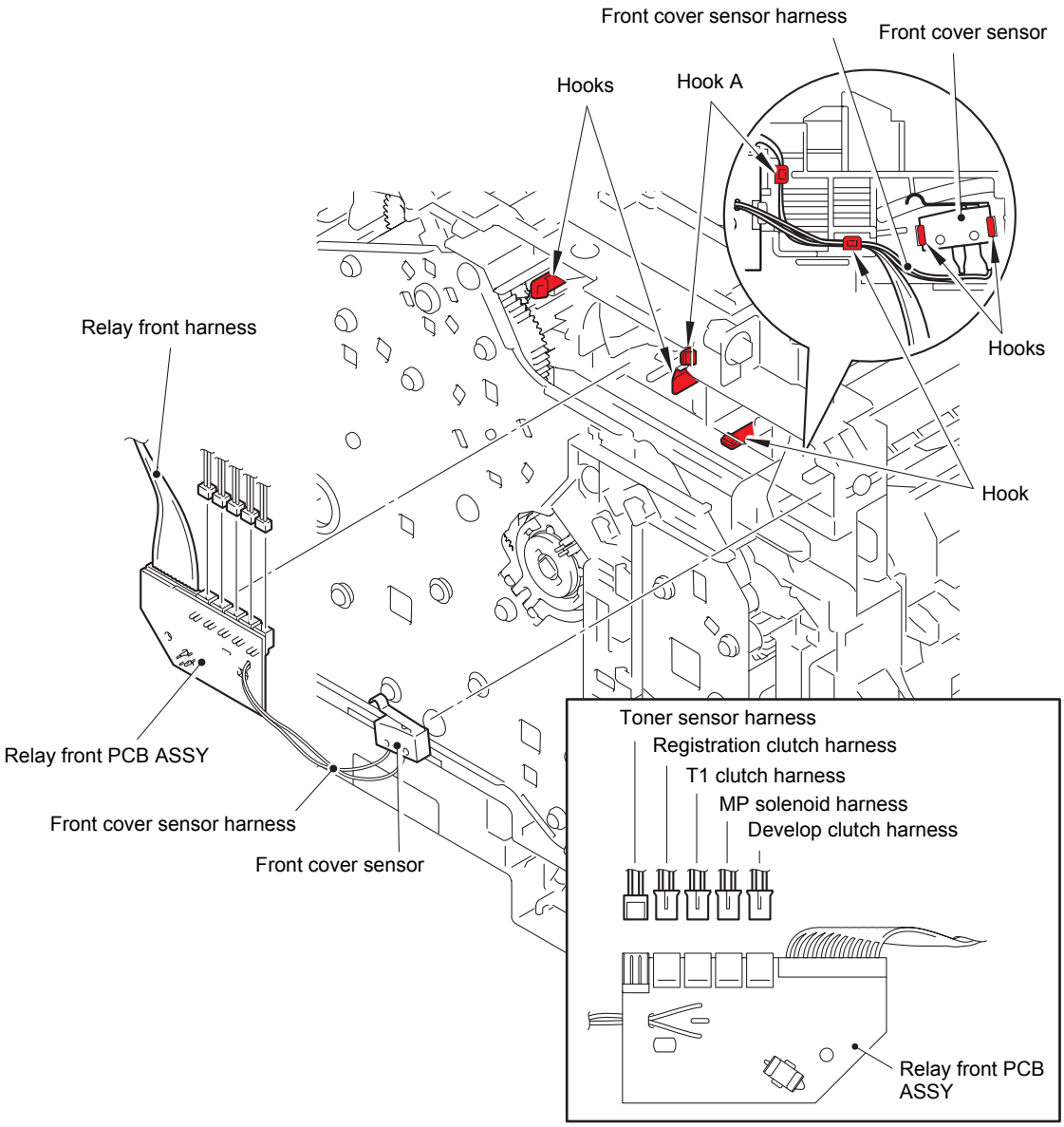

Fig. 3-115

Harness routing: Refer to “1.Main PCB ASSY” and “2.Relay front PCB ASSY”.

9.25 Registration clutch / T1 clutch

(1) Release the registration clutch harness and the T1 clutch harness from the securing fixtures.

(2) Remove collar 6, and remove the registration clutch from the machine.

(3) Release the hook, and remove the T1 clutch from the machine.

Note:
- Be careful not to damage the hook on the T1 clutch.

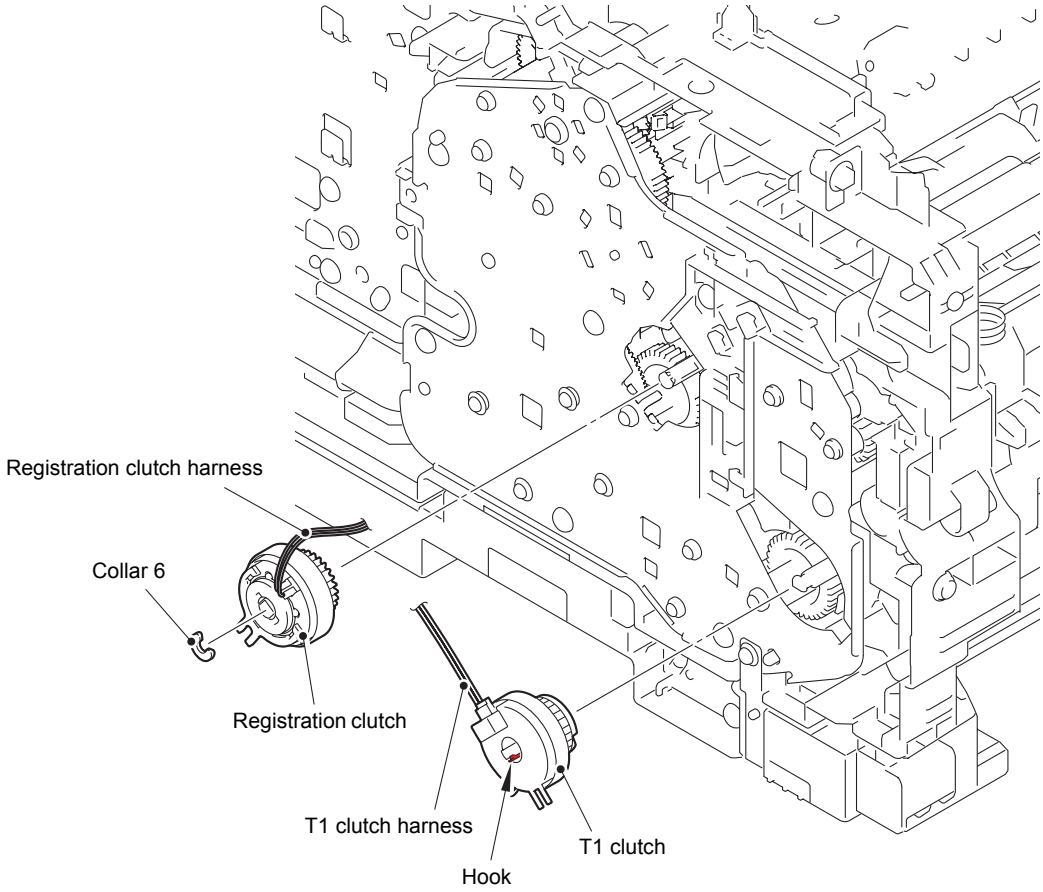

Fig. 3-116

Harness routing: Refer to "2.Relay front PCB ASSY".

9.26 Main frame L ASSY

(1) Remove the two taptite bind B M4x12 screws, and remove the rear under bar from the machine.

> **Note:**
> - Only DCP-8250DN, MFC-8950DW, MFC-8950DWT, MFC-8952DW and MFC-8952DWT are equipped with a rear under bar.

(2) Remove the two taptite bind B M4x12 screws, and remove the front under bar and the under bar earth plate R.

(3) Remove the taptite cup S M3x8 SR screw, and remove the under bar earth plate L from the machine.

(4) Remove the main PCB insulation sheet (transparent) and the main PCB insulation sheet (black) from the machine. Then pull out the duplex solenoid harness from the main PCB insulation sheet (transparent).

(5) Turn the registration roller bushing of the registration roller to the position as shown in the illustration below, and pull out the registration roller from the machine.

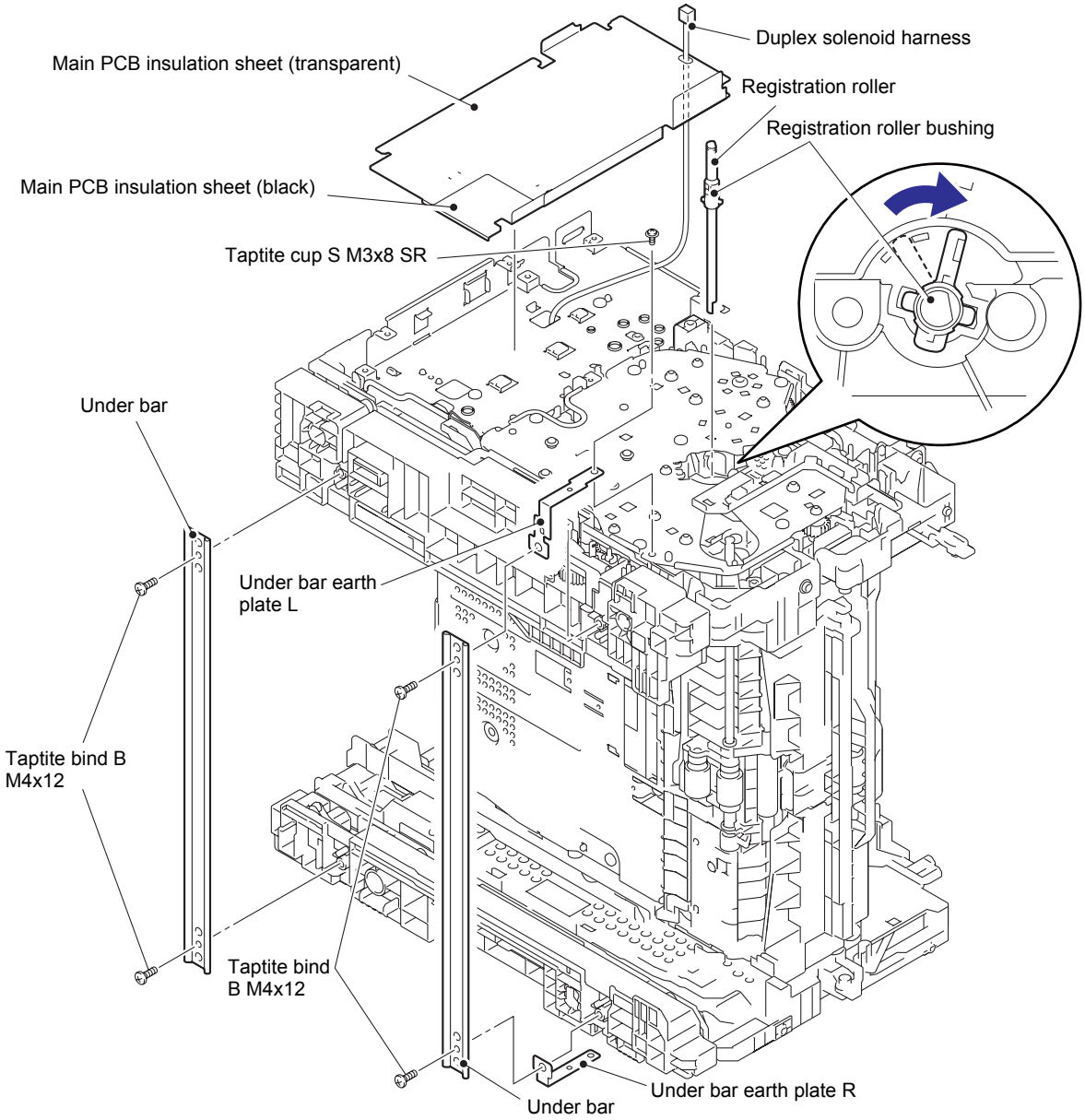

Fig. 3-117

(6) Remove the three taptite cup S M3x8 SR screws and four taptite bind B M4x12 screws, and remove the main frame L ASSY from the machine. Then pull out the low-voltage power supply harness, the eject sensor harness and the main HVPS flat cable from the main frame L ASSY.

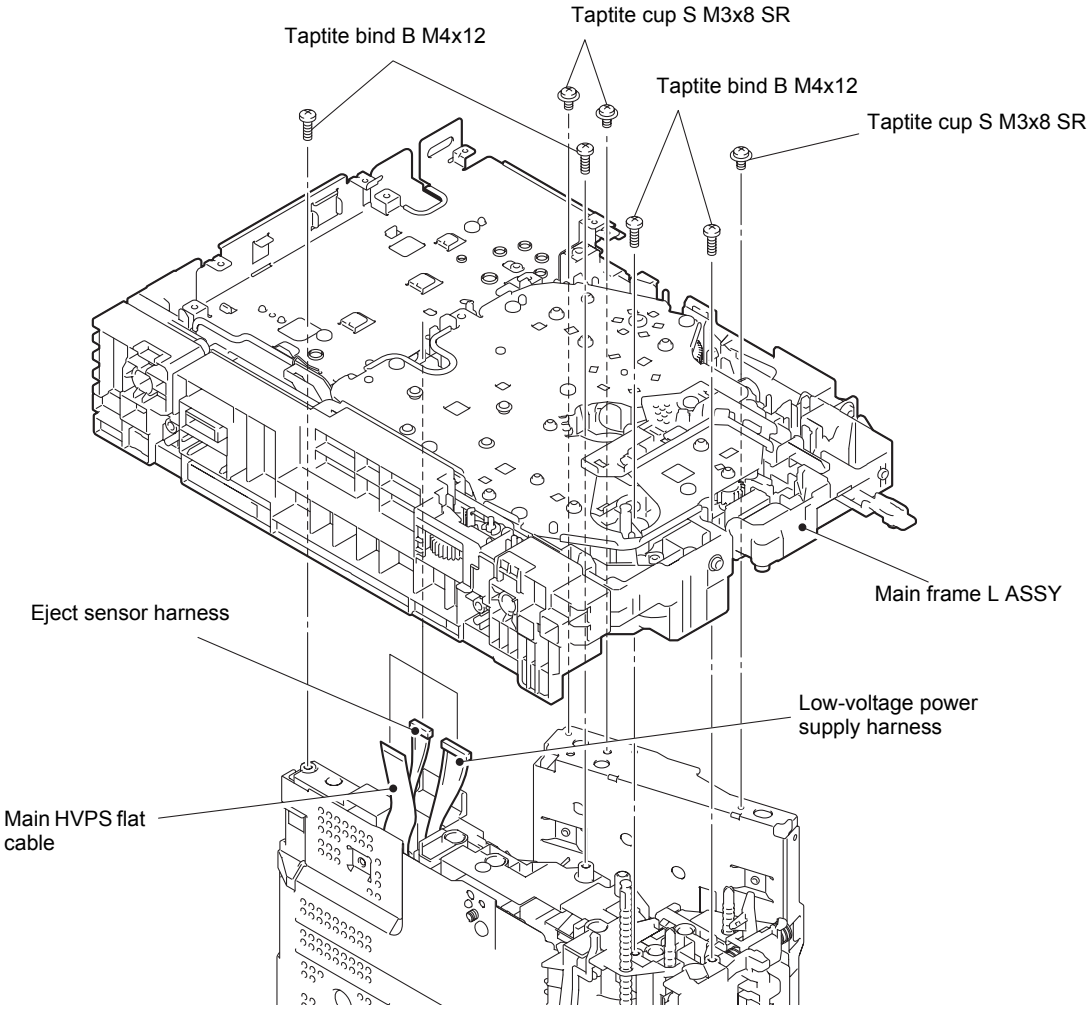

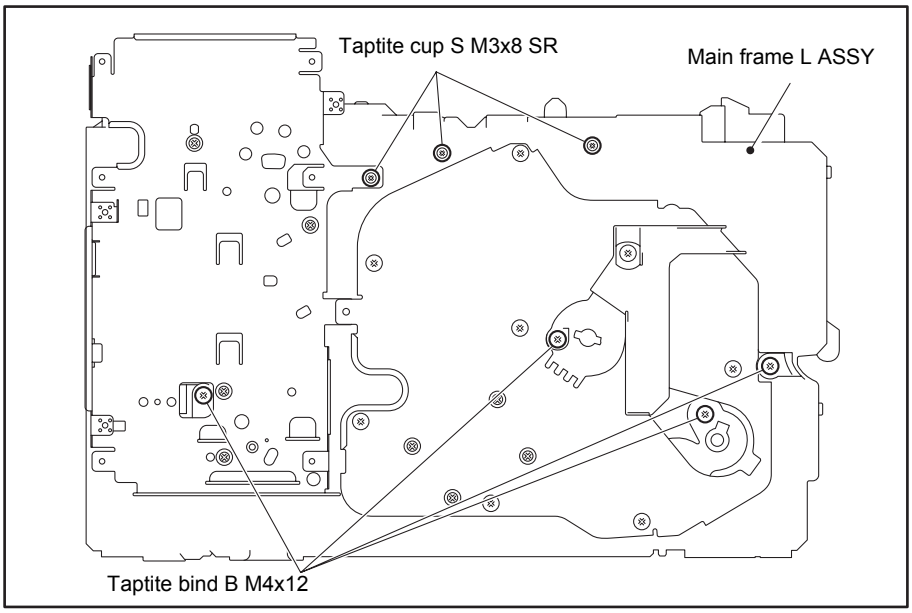

Fig. 3-118

9.27 Main motor ASSY

(1) Release the lock to remove the main motor harness from the clamp (only for models without main motor cover).

(2) Remove the eight taptite bind B M4x12 screws, and remove the drive sub ASSY from the main frame L ASSY.

Note:

- When removing the drive sub ASSY, be careful not to damage the shaft of the drive sub ASSY.

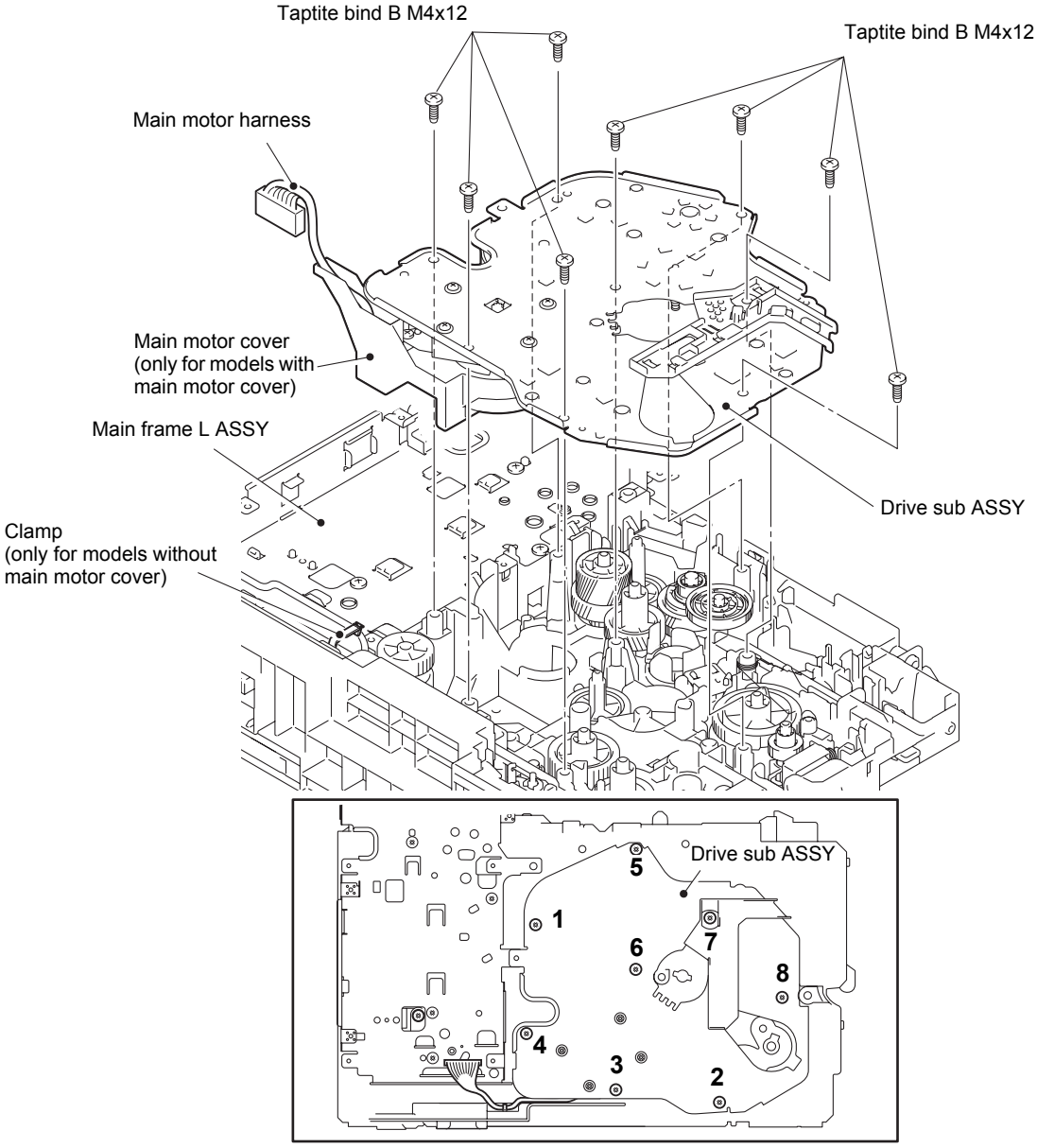

Fig. 3-119

Harness routing: Refer to "1.Main PCB ASSY".

Assembling Note:

- When securing the drive sub ASSY with screws, tighten the screws in the sequence of the numbers engraved on the drive sub ASSY.
- When connecting the harness, lay it along the frame L to avoid main motor harness to be tilted towards the drive sub ASSY side (only for models without main motor cover).

Note:

- Do not allow the metallic gear shaft of the main motor ASSY and drive sub ASSY to face down. Failure to observe this may cause the steel plate to be bend.

(3) Remove the four taptite cup S M3x8 SR screws, and remove the main motor ASSY from the drive sub ASSY.

(4) Remove the fuser gear 35/83R and the DRM gear 32/83R from the main motor ASSY.

Note:

- Be careful not to damage the gear teeth.

(5) Disconnect the main motor harness from the main motor ASSY.

(6) Remove the two taptite bind B M3x10 screws, and remove the main motor ASSY from the main motor cover (only for models with main motor cover).

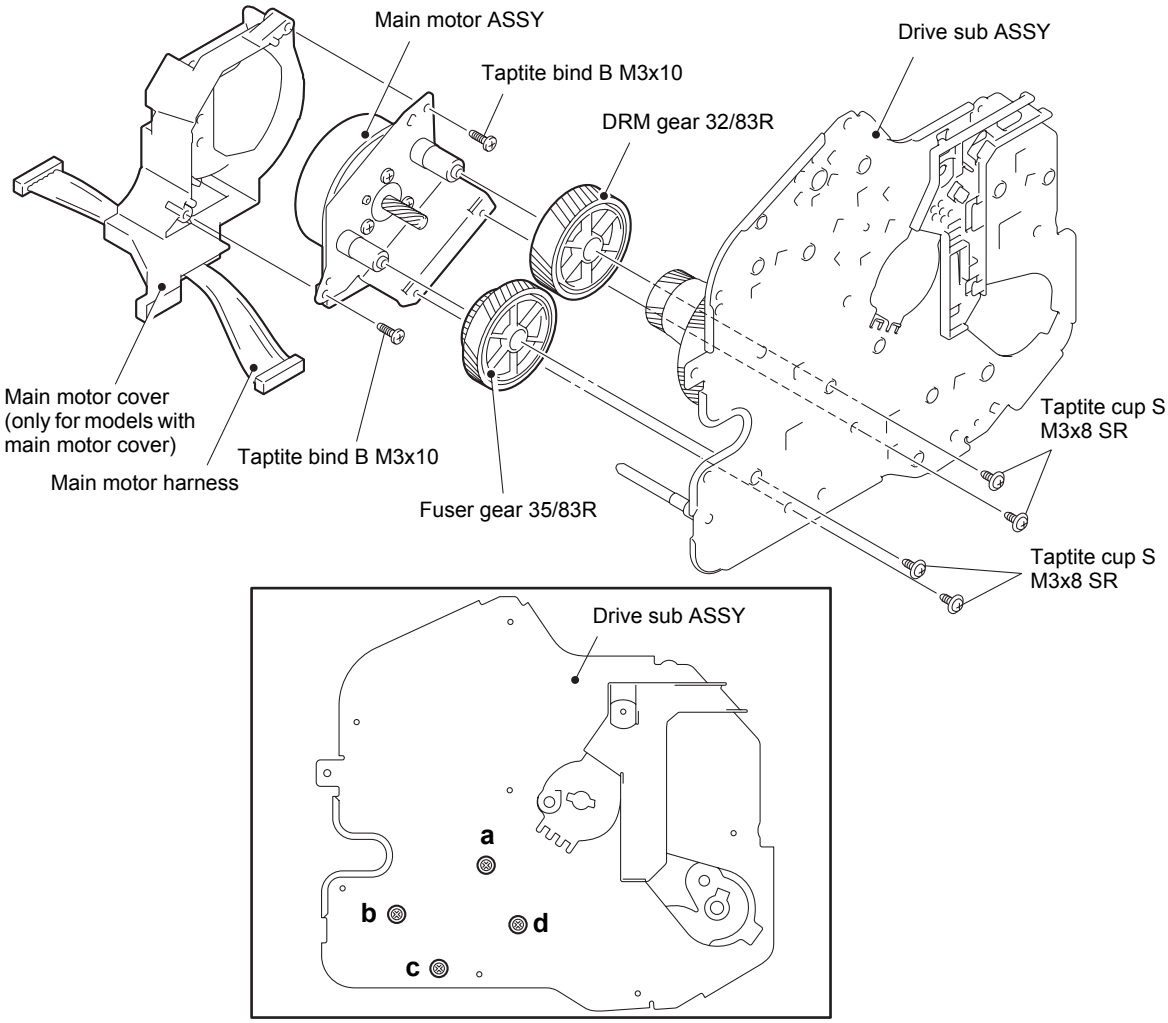

Fig. 3-120

Assembling Note:

- When securing the main motor ASSY to the drive sub ASSY with screws, tighten the screws in the sequence of the alphabetical characters engraved on the drive sub ASSY.

9.28 Develop joint gear 37 / Develop joint

(1) Tilt the develop joint to remove it from the drive sub ASSY, and then remove the develop joint spring from the drive sub ASSY.

Note:
- When removing the develop joint, be careful not to damage the hooks.

(2) Pull out the develop joint gear 37 from the drive sub ASSY.

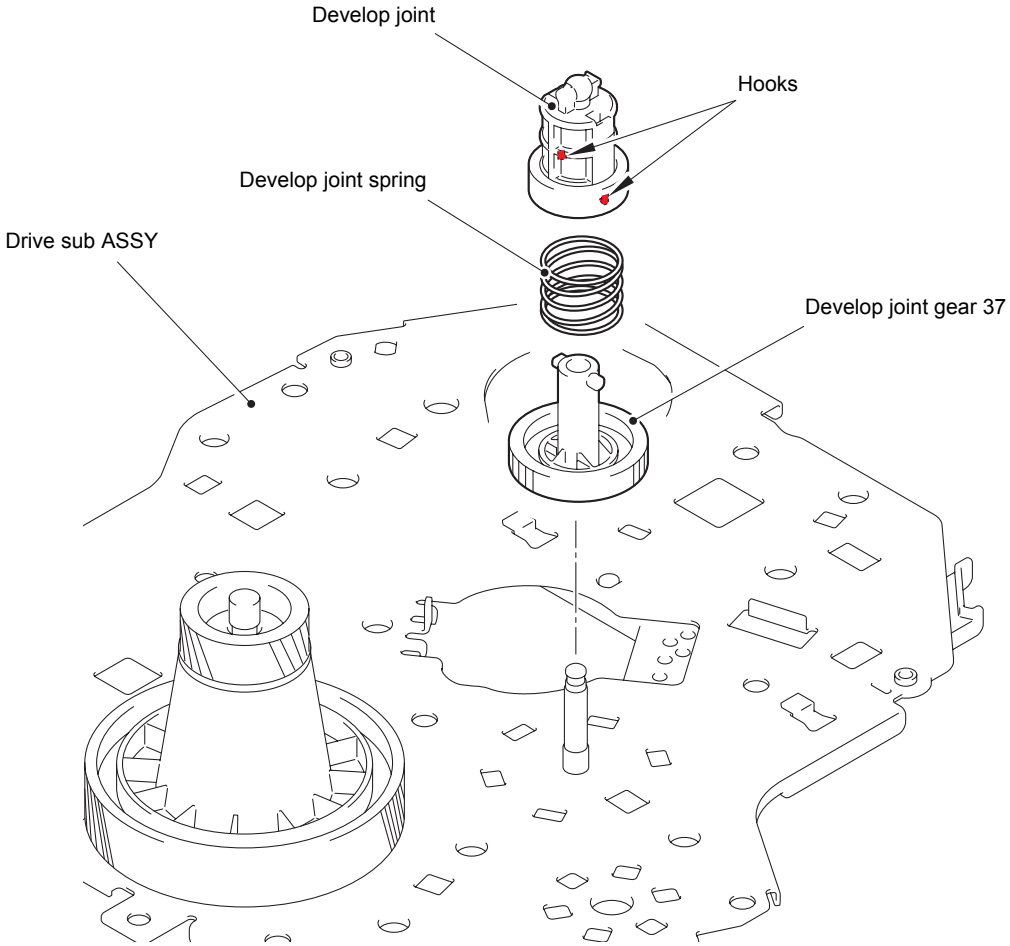

Fig. 3-121

Confidential

9.29 LT drive gear 29

(1) Pull out the LT drive gear 29 from the main frame L ASSY.

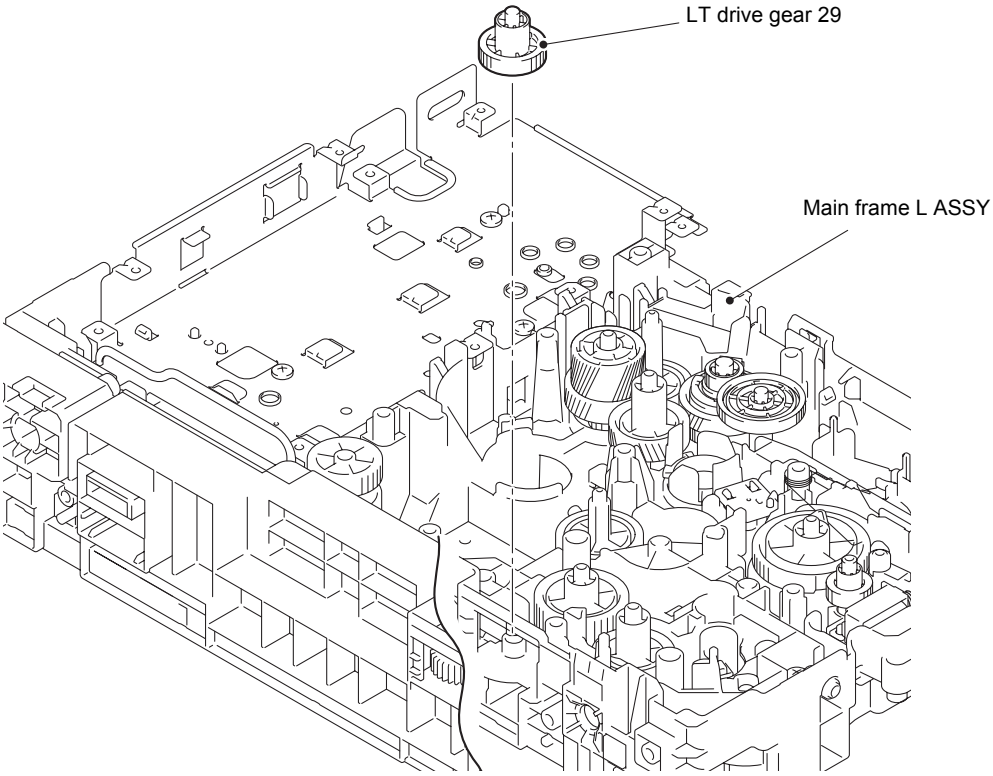

Fig. 3-122

Confidential

9.30 Toner sensor PCB ASSY

(1) Remove the MP sector gear spring from the main frame L ASSY.

(2) Release the toner sensor harness from the securing fixtures.

(3) Release the two hooks to remove the toner sensor PCB ASSY from the main frame L ASSY.

(4) Release the two hooks to remove the toner LED holder from the toner sensor PCB ASSY.

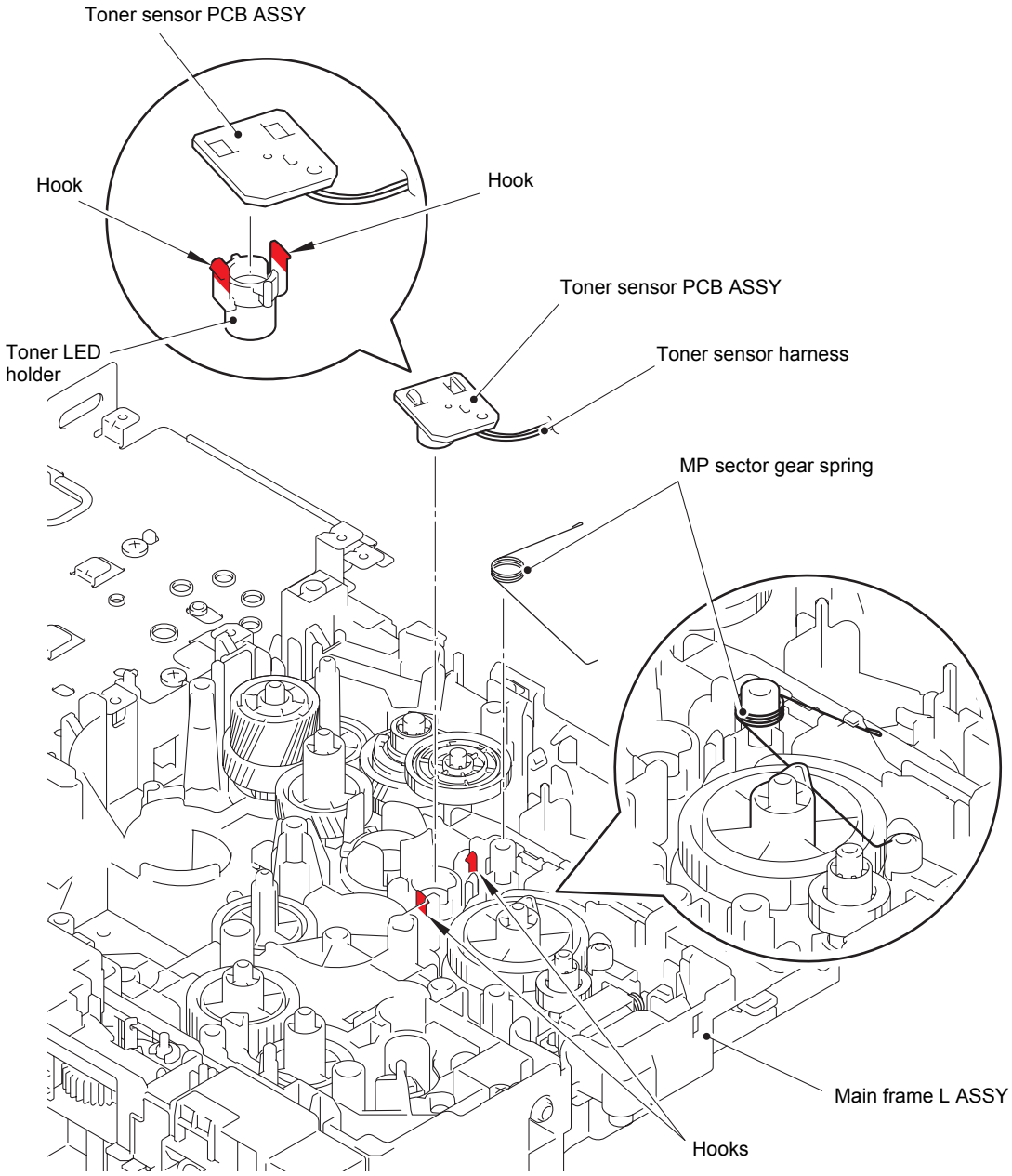

Fig. 3-123

Harness routing: Refer to "2.Relay front PCB ASSY".

9.31 MP solenoid

(1) Remove the MP drive gear 18 from the main frame L ASSY.

(2) Release the MP solenoid harness from the securing fixtures.

(3) Remove the taptite bind B M3x10 screw, and remove the MP solenoid and the MP solenoid lever from the main frame L ASSY.

(4) Remove the MP solenoid lever and the MP solenoid spring from the MP solenoid.

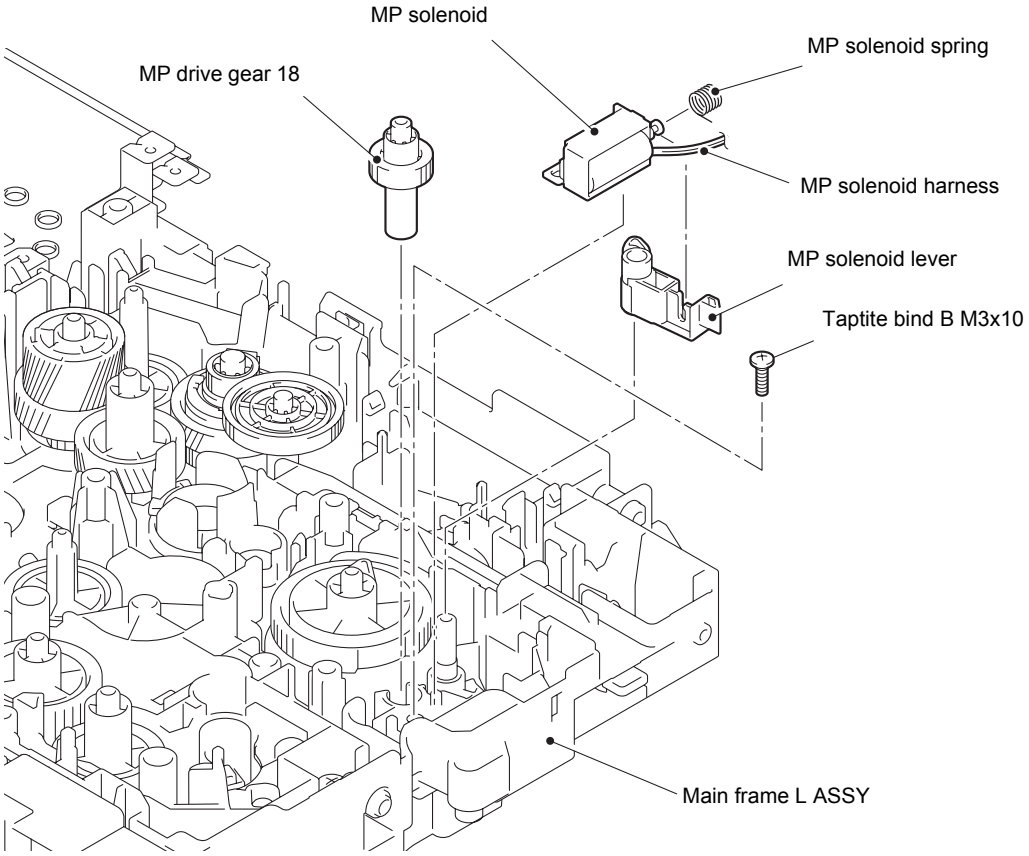

Fig. 3-124

Harness routing: Refer to “2.Relay front PCB ASSY”.

Confidential

9.32 Develop clutch 51R / Develop one way clutch 53

(1) Remove the develop idle gear 53 from the main frame L ASSY.

(2) Remove the develop shaft gear 22 from the main frame L ASSY.

(3) Release the develop clutch harness from the securing fixtures, and remove the develop clutch 51R from the main frame L ASSY.

(4) Remove the develop one way clutch 53 from the main frame L ASSY.

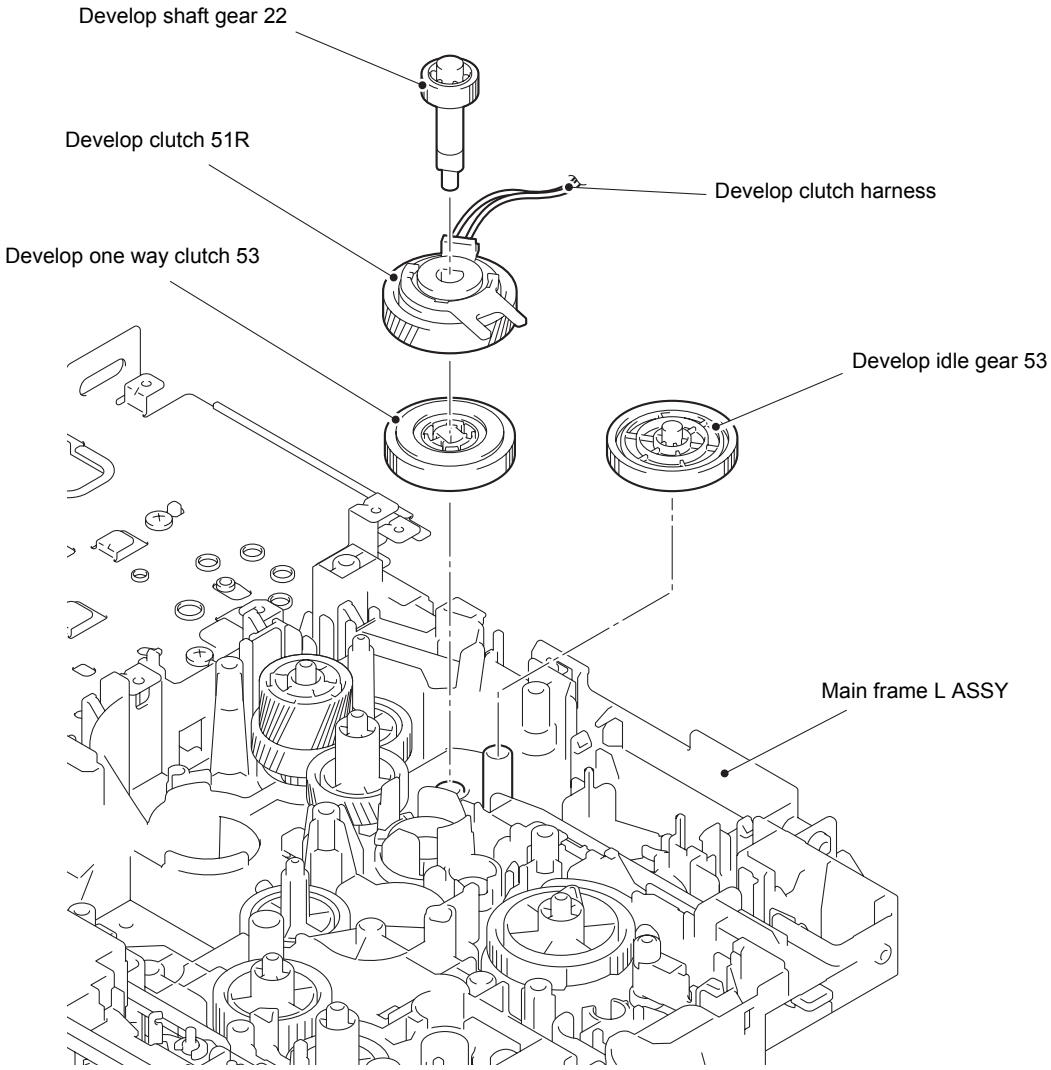

Fig. 3-125

Harness routing: Refer to "2.Relay front PCB ASSY".

Assembling Note:

- Attach the develop one way clutch 53 so that it faces as shown in the illustration above.

9.33 New toner actuator

(1) Remove "A" on the new toner actuator spring from the main frame L ASSY. Turn the new toner actuator in the direction of the arrow, and release the hook to remove the new toner actuator from the main frame L ASSY.

(2) Remove the new toner actuator spring from the new toner actuator.

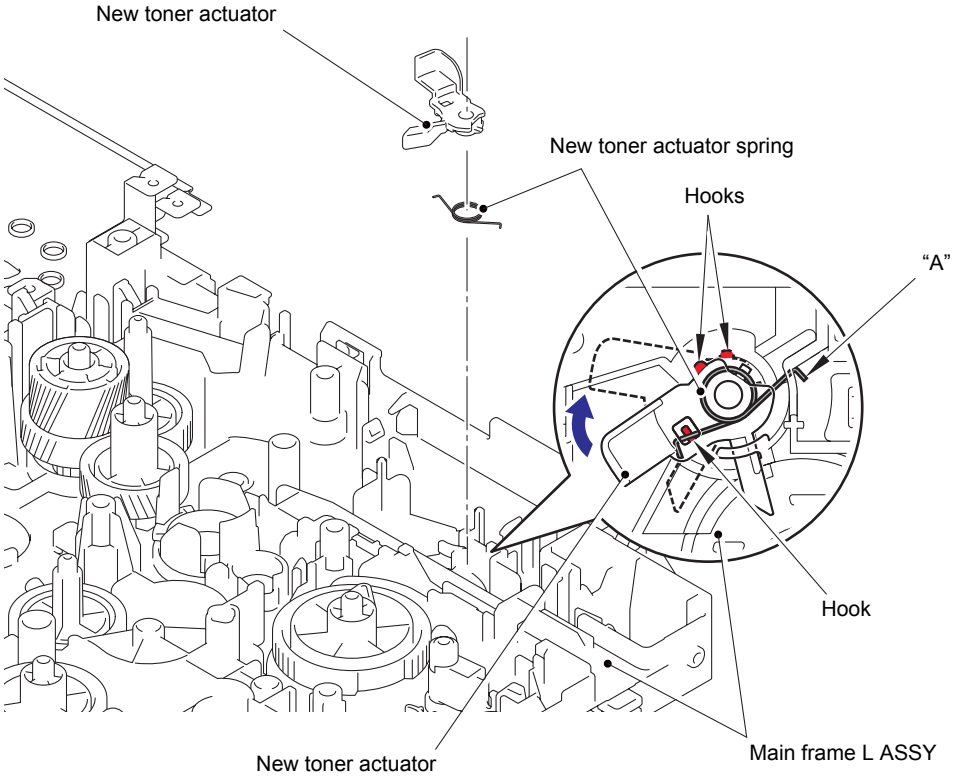

Fig. 3-126

Assembling Note:

- When attaching the new toner actuator, pay attention to the direction, as shown in the illustration above.

Confidential

9.34 Internal temperature thermistor

(1) Release the internal temperature thermistor harness from the two hooks and the guide, and remove the internal temperature thermistor from the main frame L ASSY.

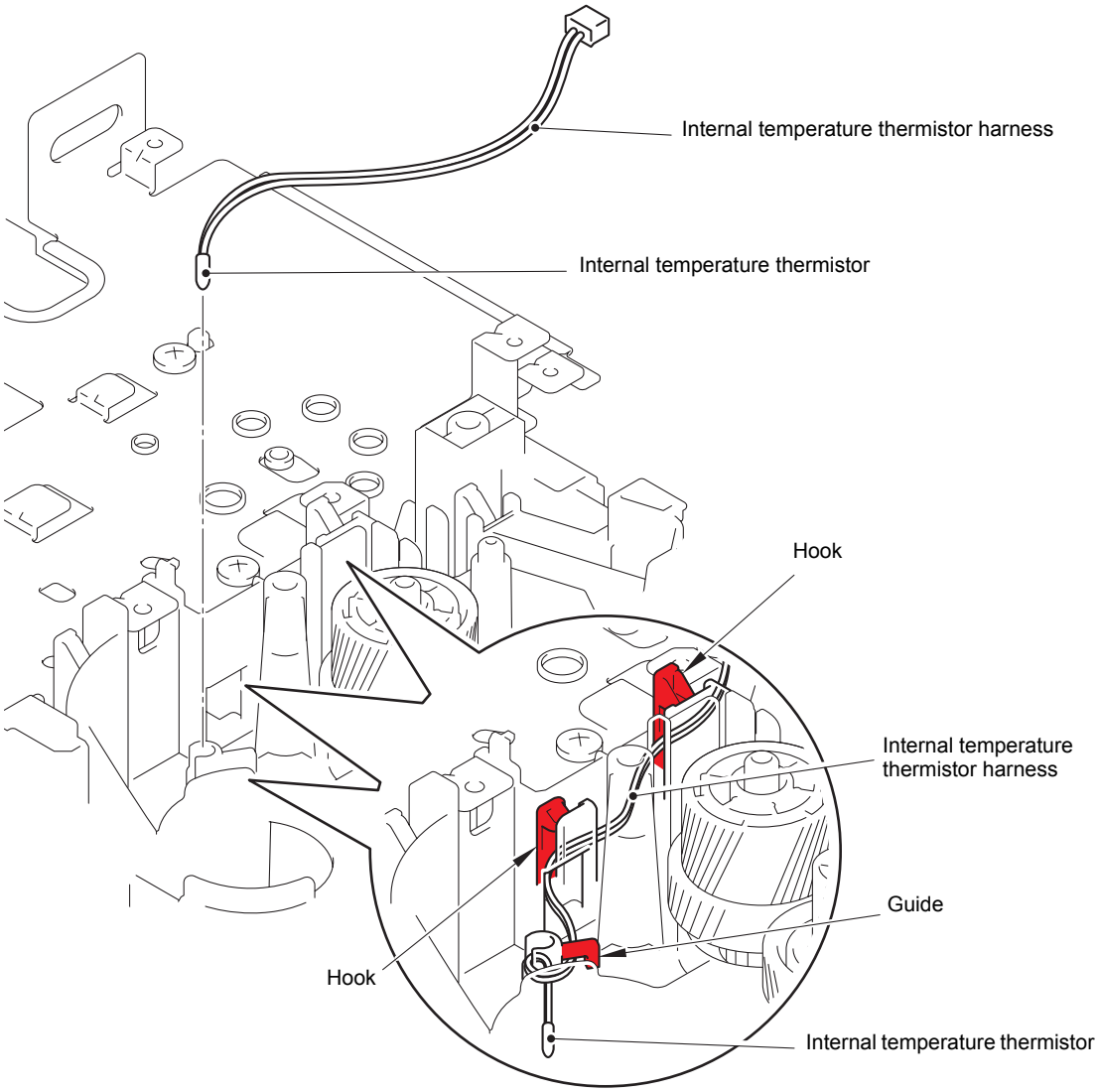

Fig. 3-127

9.35 Fuser drive gear 39

(1) Remove the four taptite bind B M4x12 screws, and release the two hooks to remove the main PCB shield calking ASSY from the main frame L ASSY.

Note:

- Do not allow the metallic gear shaft of the main PCB shield calking ASSY to face down. Failure to observe this may cause the steel plate to be bend.

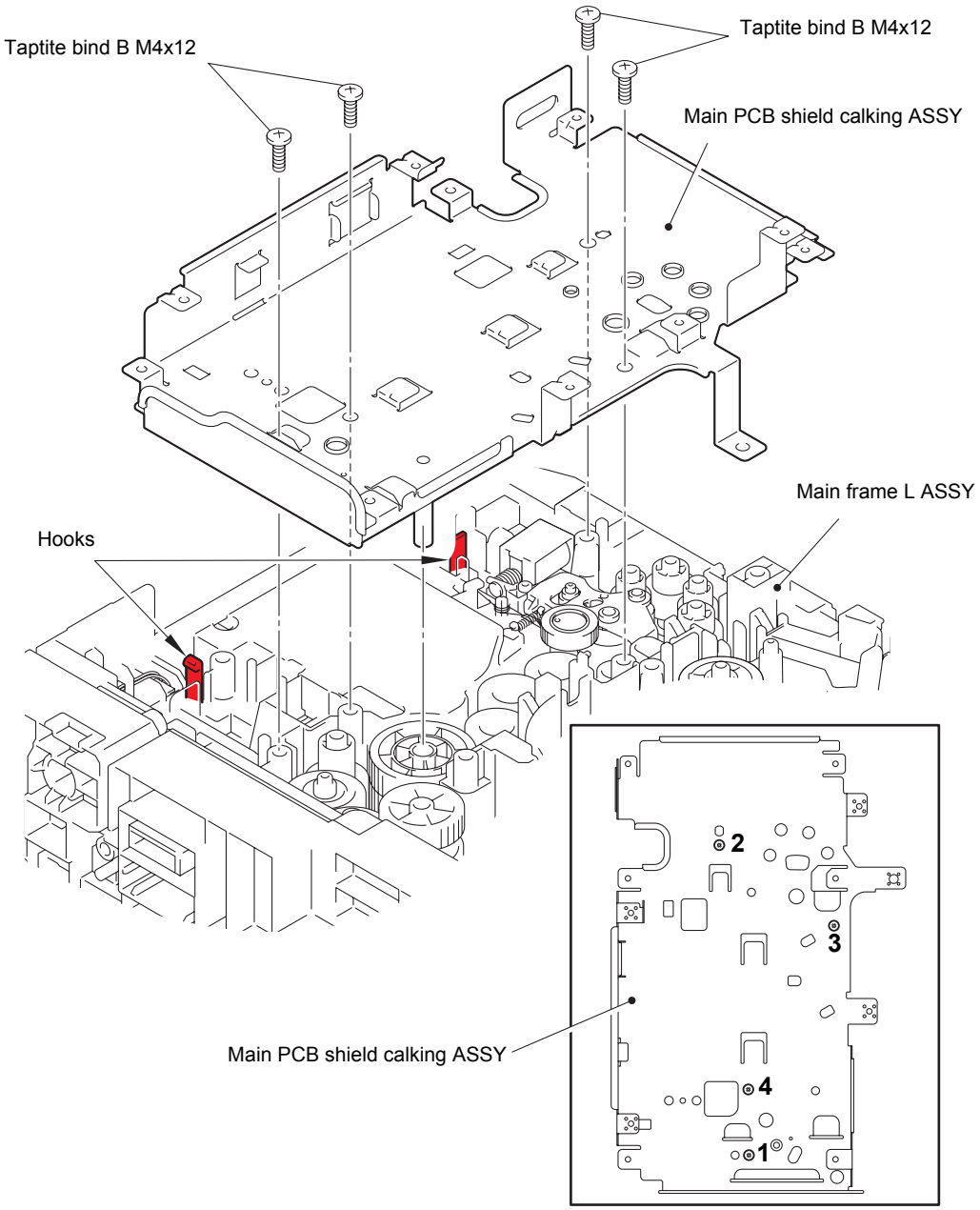

Fig. 3-128

Assembling Note:

- When securing the main PCB shield calking ASSY with screws, tighten the screws in the sequence of the numbers engraved on the main PCB shield calking ASSY.

(2) Remove the fuser drive gear 39 from the main frame L ASSY.

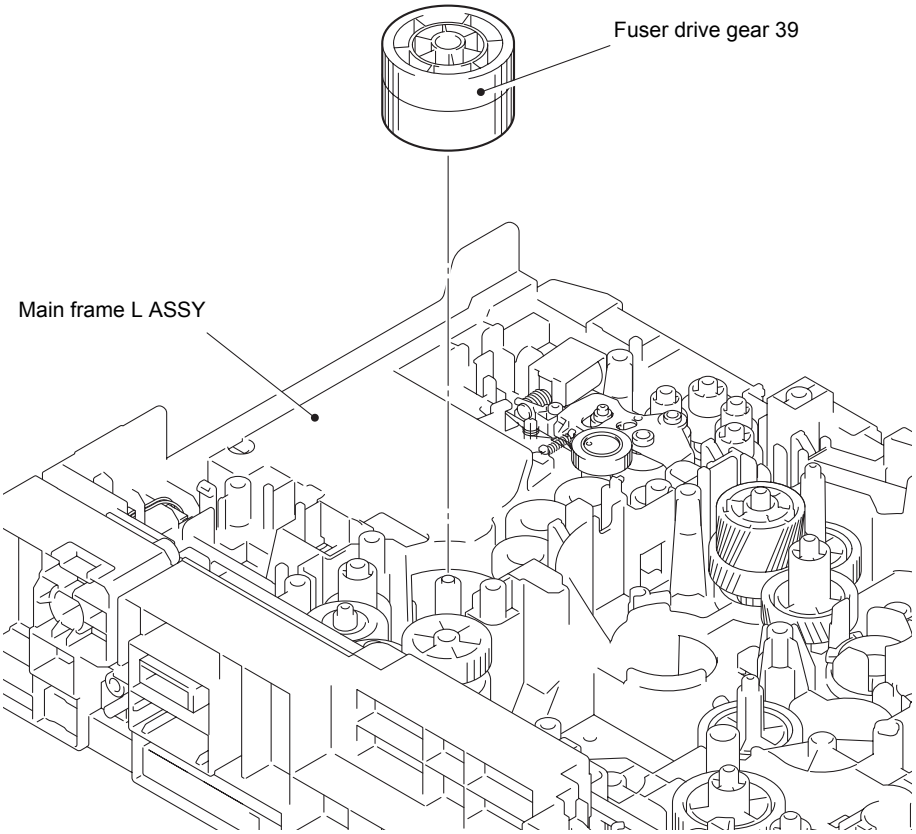

Fig. 3-129

9.36 Duplex solenoid

(1) Remove the eject idle gear 20 from the main frame L ASSY.

(2) Remove the eject switch arm spring from the main frame L ASSY.

(3) Remove the eject switch arm from the main frame L ASSY.

(4) Remove the eject sector gear spring from the main frame L ASSY.

(5) Remove the eject sector gear from the main frame L ASSY.

(6) Remove the taptite bind B M3x10 screw, and remove the duplex solenoid and the duplex solenoid lever from the main frame L ASSY. Then remove the duplex solenoid lever from the duplex solenoid.

(7) Remove the duplex solenoid spring from the duplex solenoid.

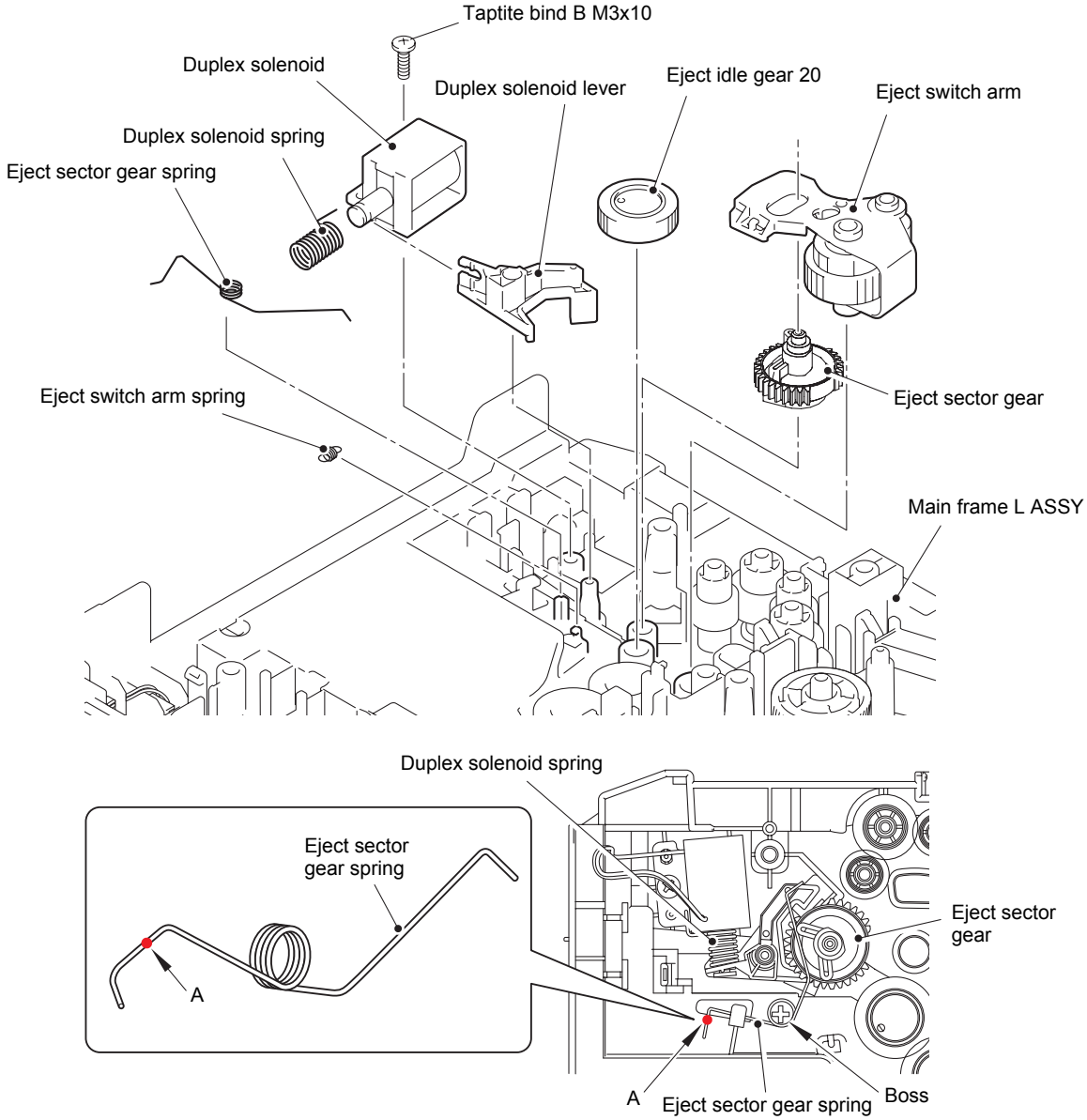

Fig. 3-130

Assembling Note:

- When attaching the eject sector gear spring and the duplex solenoid spring, pay attention to the direction, as shown in the illustration above.

9.37 Back cover sensor

(1) Release the back cover sensor harness from the securing fixtures.

(2) Release the two hooks, and remove the back cover sensor from the main frame L ASSY.

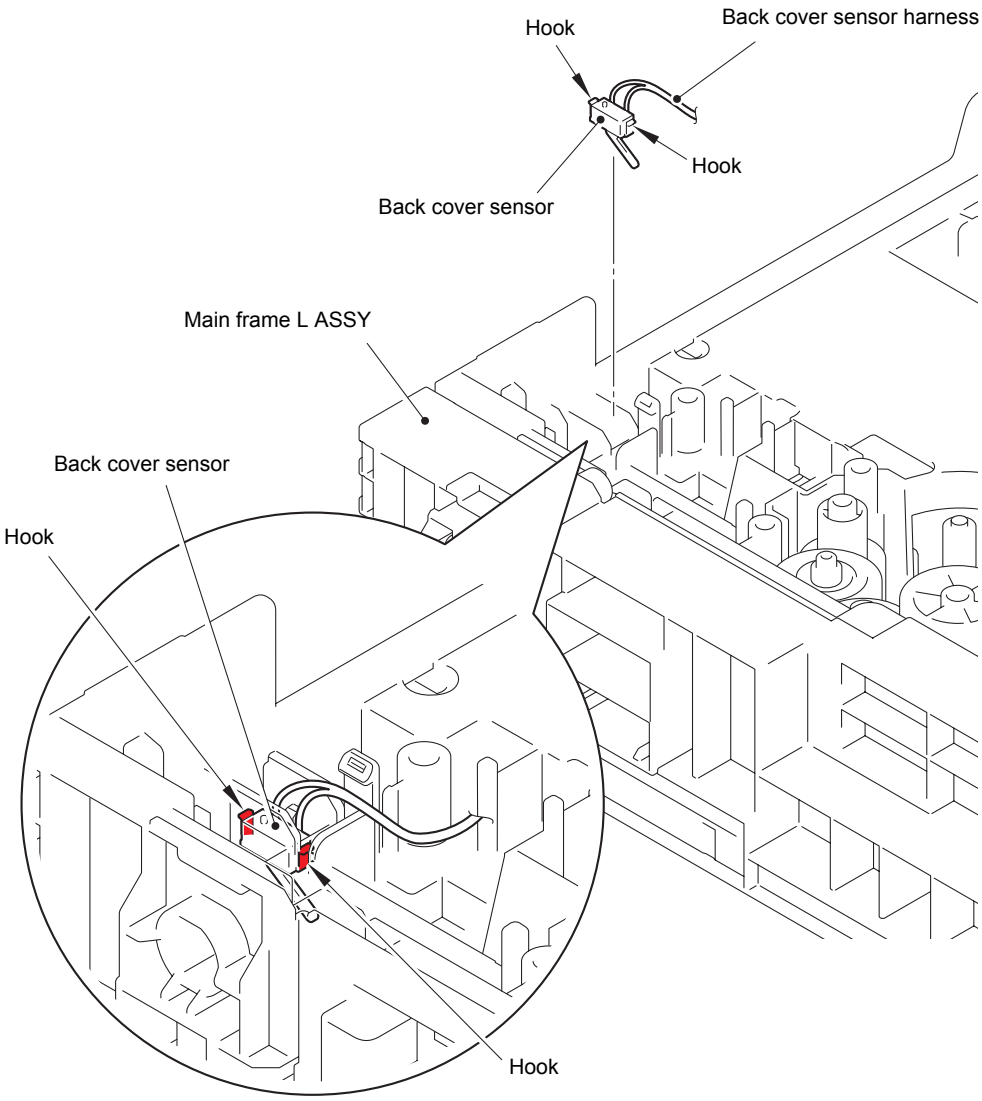

Fig. 3-131

Harness routing: Refer to "1.Main PCB ASSY".

Assembling Note:

- When attaching the back cover sensor, insert it at an angle from the right side.

9.38 LT connector (T1)

(1) Remove the three taptite bind B M4x12 screws, and remove the bottom frame L from the main frame L ASSY. Then pull out the LT harness from the main frame L ASSY.

(2) Release the two hooks to remove the LT connector (T1) from the bottom frame L.

Note:
- When the bottom frame L is not used in the machine, remove the LT connector (T1) from the main frame L ASSY.

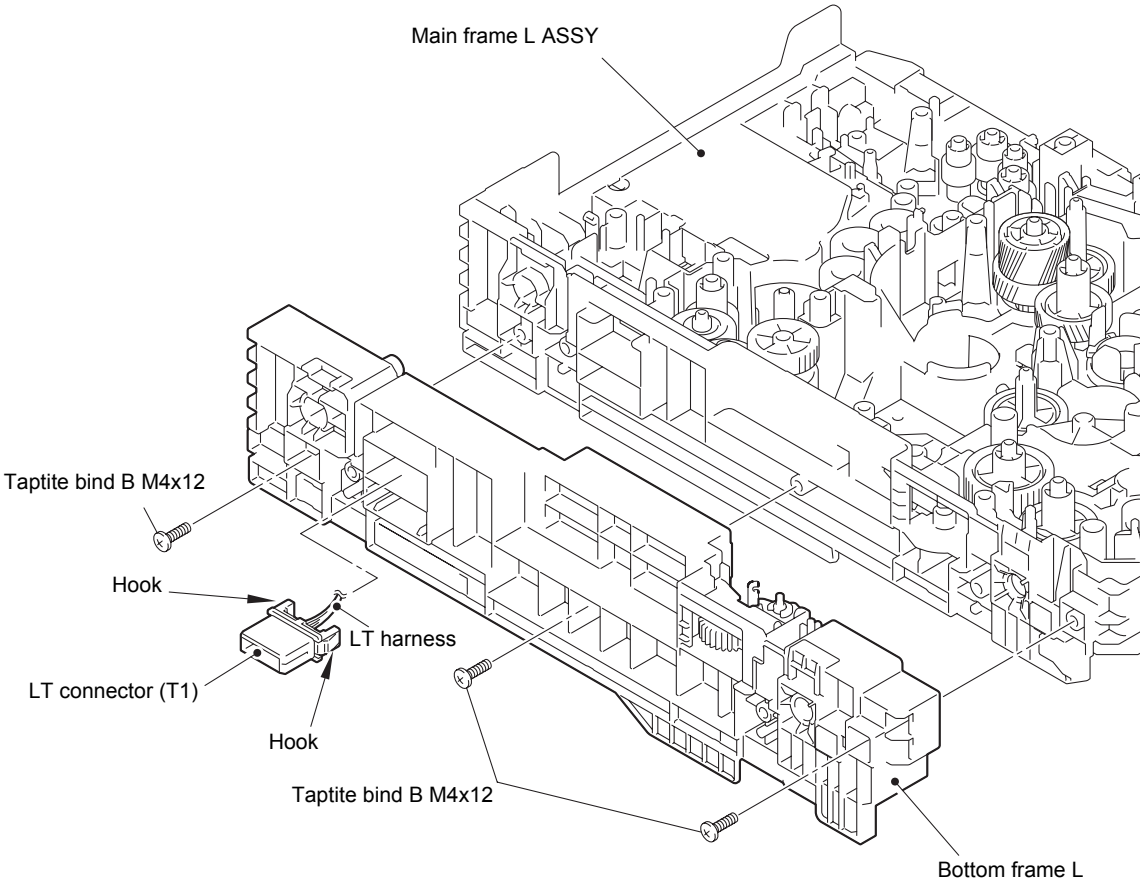

Fig. 3-132

9.39 T1 roller holder ASSY

(1) Push the T1 lift arm in the direction of arrow 1, and remove the boss on the T1 roller holder ASSY from the T1 lift arm.

(2) Turn the T1 roller holder ASSY in the direction of arrow 2a, and slide it in the direction of arrow 2b to remove it from the T1 separation roller shaft. Then remove the T1 roller holder ASSY from the machine.

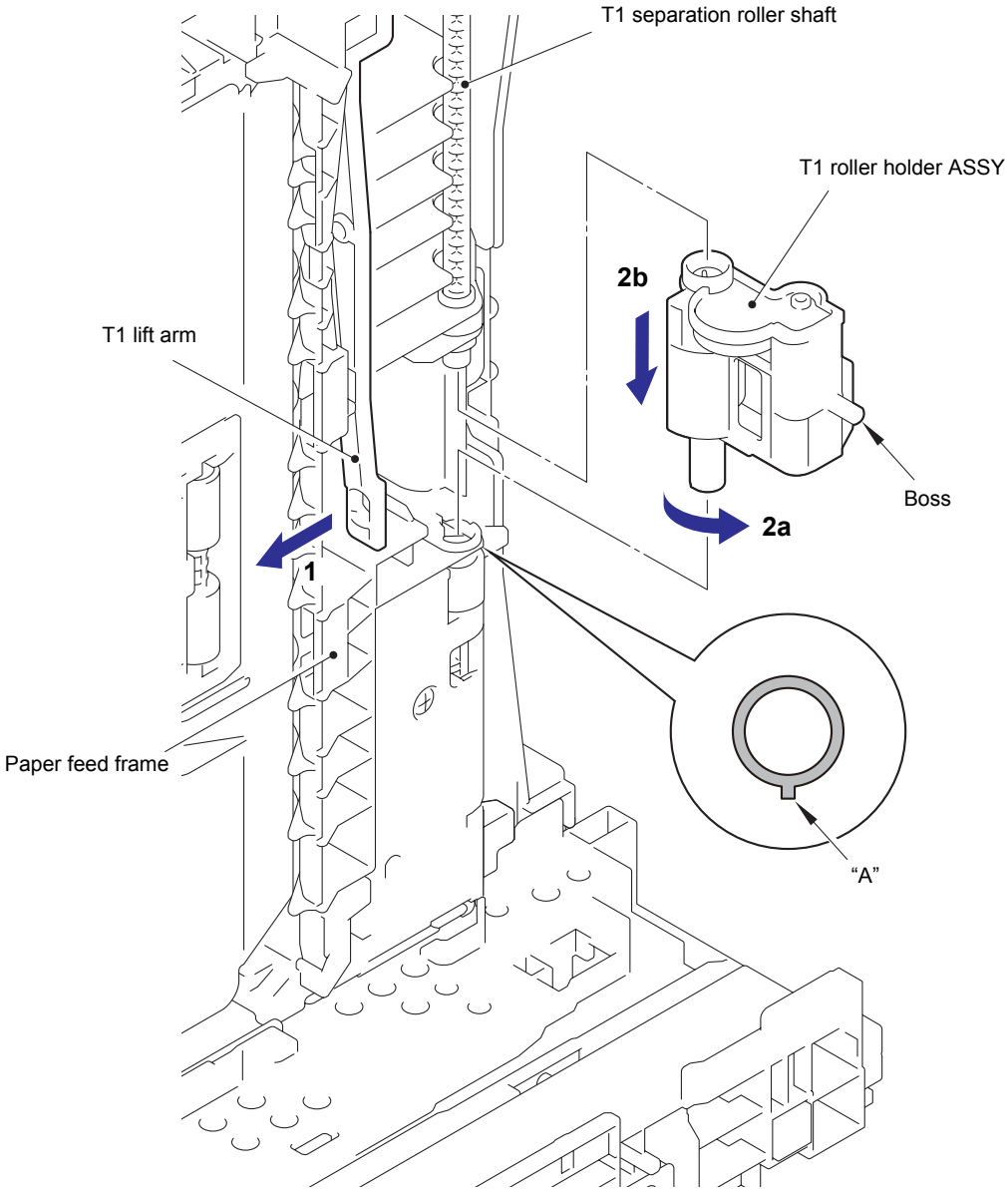

Fig. 3-133

Assembling Note:

- When attaching the T1 roller holder ASSY, engage "A" on the shaft of the T1 roller holder ASSY with the hole on the paper feed frame, and insert the shaft into the hole.

9.40 High-voltage power supply PCB ASSY

(1) Remove the four taptite bind B M4x12 screws and the two screw pan (S/P washer) M3x12DB screws. Slightly lift the base plate and slide it in the direction of the arrow to remove it from the machine.

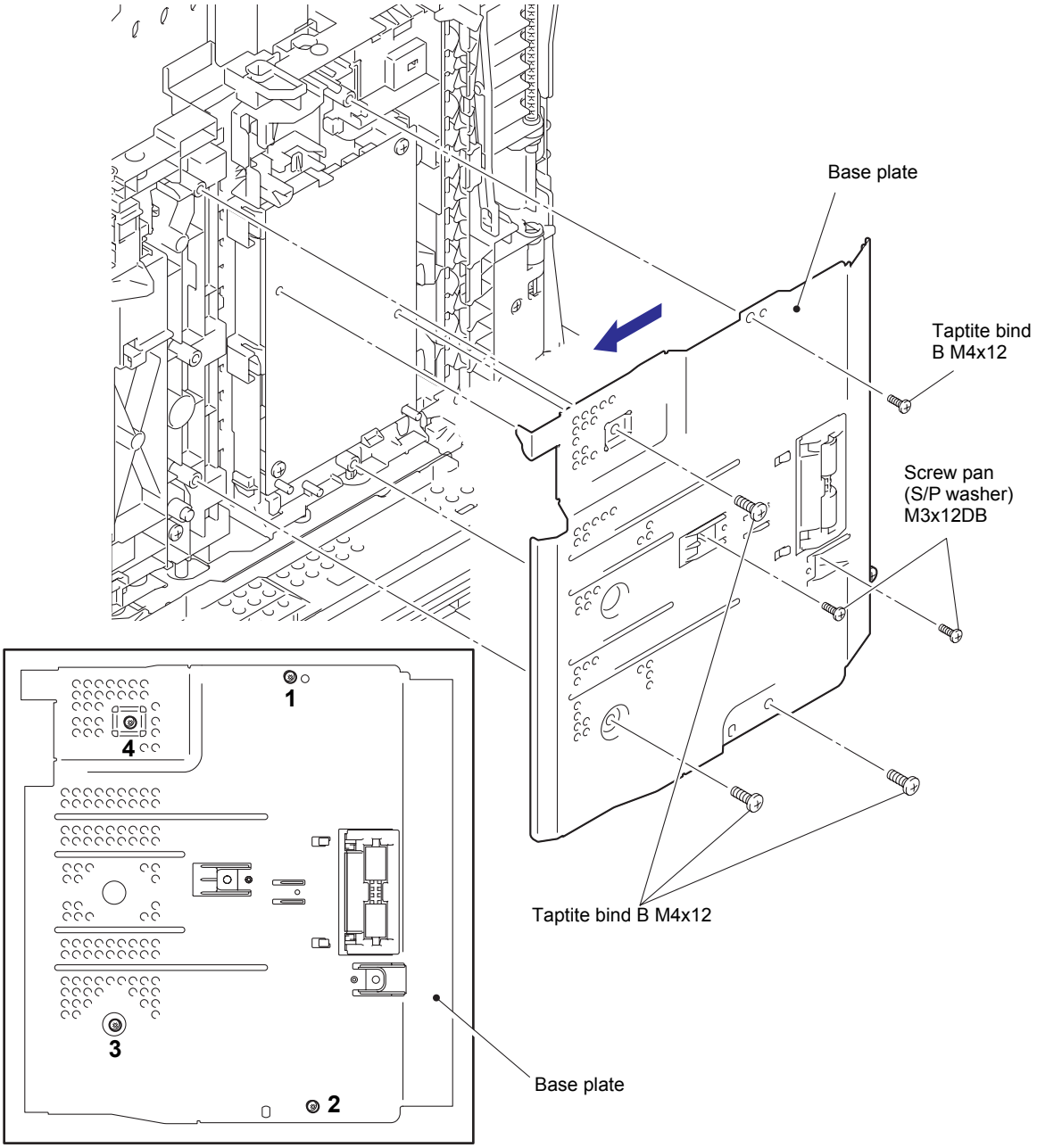

Fig. 3-134

Assembling Note:

- Carefully attach the base plate, avoiding harnesses and flat cables get caught in the base plate.
- When securing the base plate with screws, tighten the screws in the sequence of the numbers engraved on the base plate.

(2) Open the HV insulation sheet. Remove the two taptite bind B M4x12 screws, and release the two hooks. Lift the HV insulation sheet and the high-voltage power supply PCB ASSY, and remove the feed earth spring from the machine.

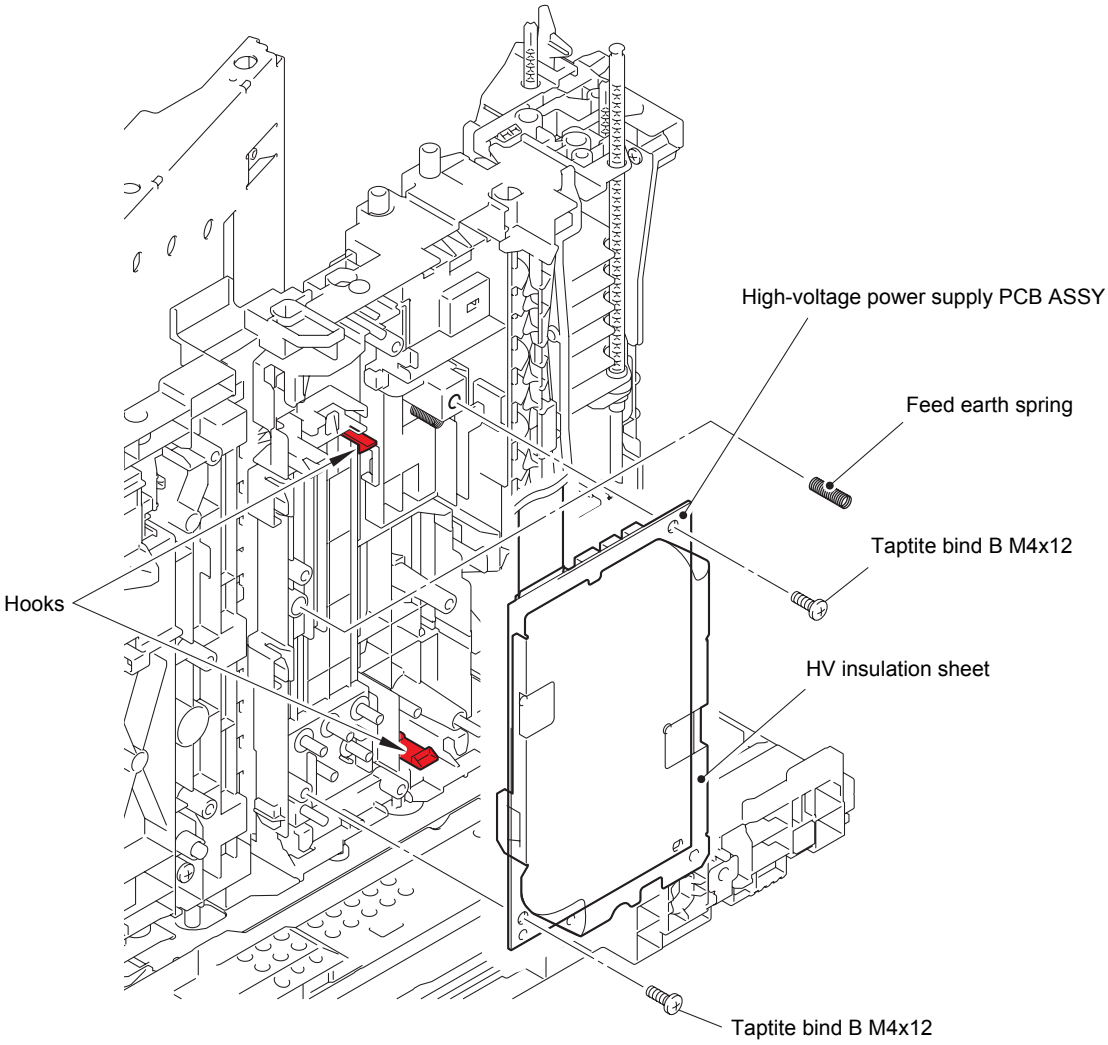

Fig. 3-135

(3) Disconnect the registration front/rear sensor harness, the T1 paper feed sensor harness and the MP paper empty sensor harness from the high-voltage power supply PCB ASSY, and remove the high-voltage power supply PCB ASSY from the machine.

(4) Disconnect the main HVPS flat cable from the high-voltage power supply PCB ASSY.

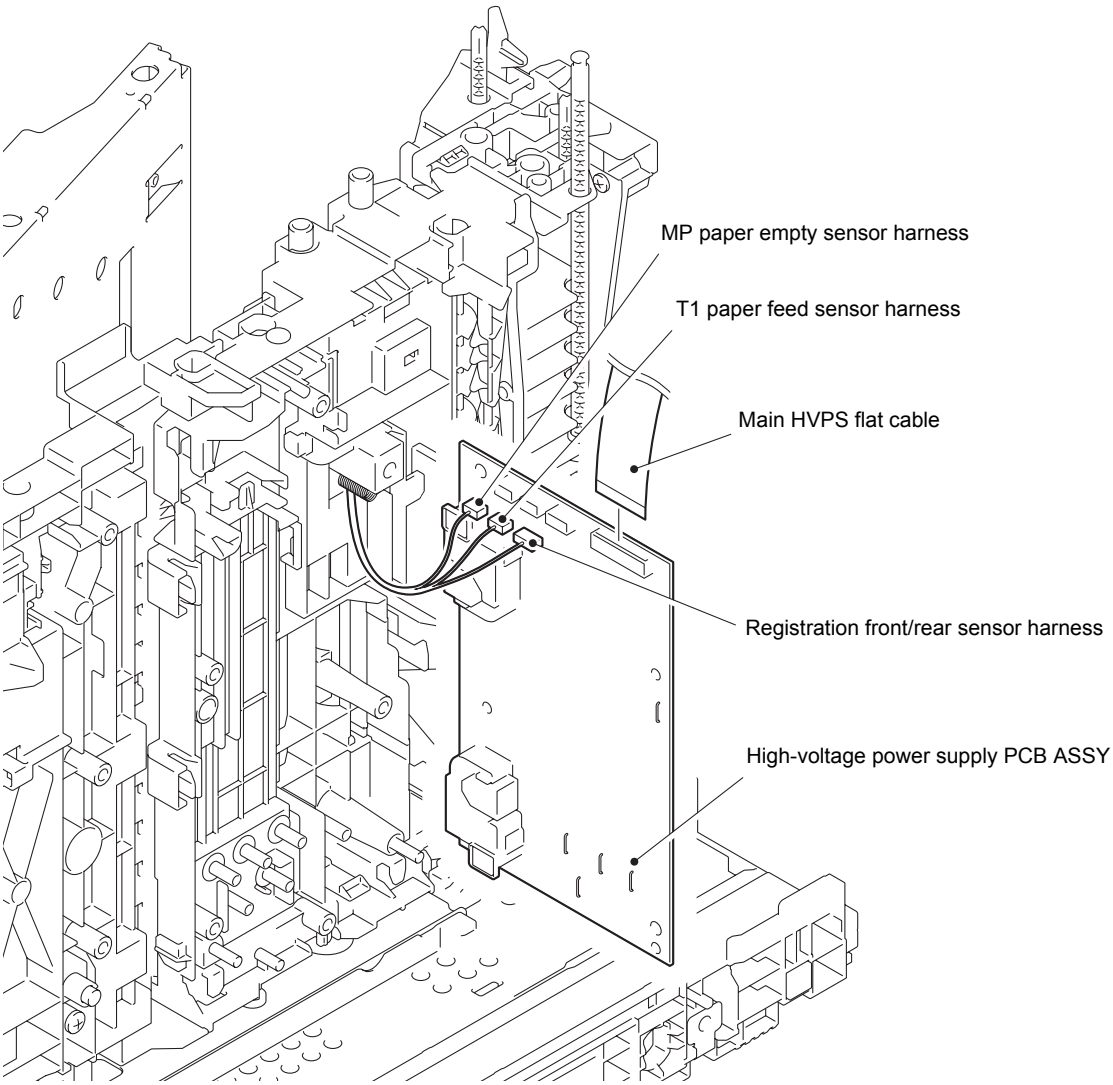

Fig. 3-136

Harness routing: Refer to "4.High-voltage power supply PCB ASSY".

9.41 Eject sensor PCB ASSY

(1) Release the eject sensor harness from the securing fixtures.

(2) Release the hook, and remove the eject sensor PCB ASSY from the machine.

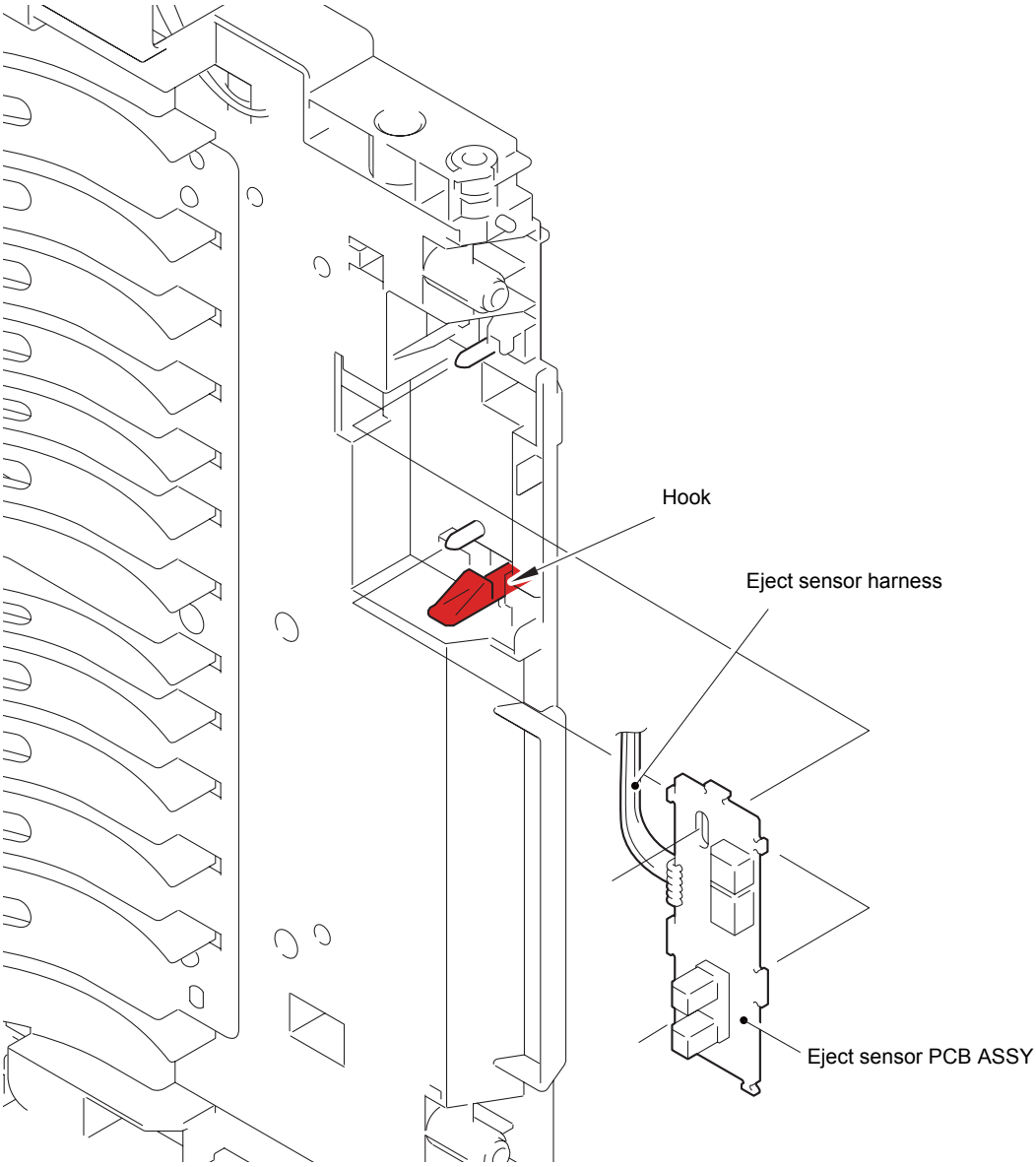

Fig. 3-137

Harness routing: Refer to "4.High-voltage power supply PCB ASSY".

9.42 MP roller holder ASSY / MP separation pad ASSY / MP separation pad spring

(1) Open the MP roller cover. Release the hook on the MP holder bushing, and slide the MP holder bushing in the direction of arrow 1 to remove it from the machine.

(2) Slide the MP roller holder ASSY in the direction of arrow 2a to remove it from the MP separation roller shaft. Then push the MP lift arm in the direction of arrow 2b to remove the MP roller holder ASSY from the machine.

(3) Push the MP lift arm in the direction of arrow 2b. Raise the MP separation pad ASSY to the 50-degree position, and remove it from the machine in the direction of arrow 3.

(4) Bend the MP separation pad spring inward to remove it from the machine.

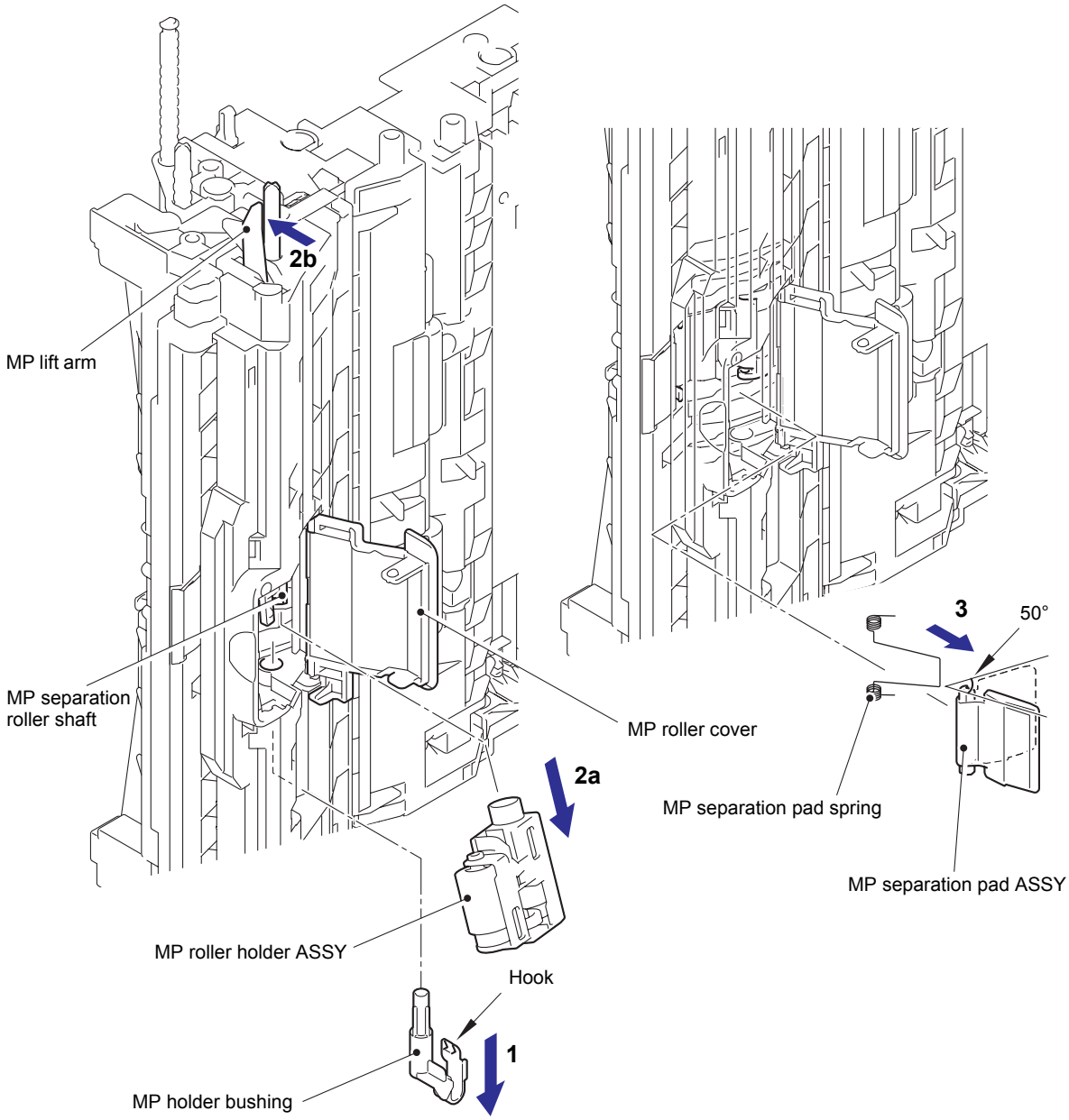

Fig. 3-138

Assembling Note:

- Attach the MP roller holder ASSY while pushing the MP separation pad ASSY.

9.43 T1 paper feed sensor PCB ASSY / T1 paper feed actuator / T1 paper feed actuator spring

(1) Release the T1 paper feed sensor harness (white connector) from the securing fixtures.

(2) Remove the taptite bind B M3x10 screw, and release the hook to remove the T1 paper feed actuator holder ASSY from the machine.

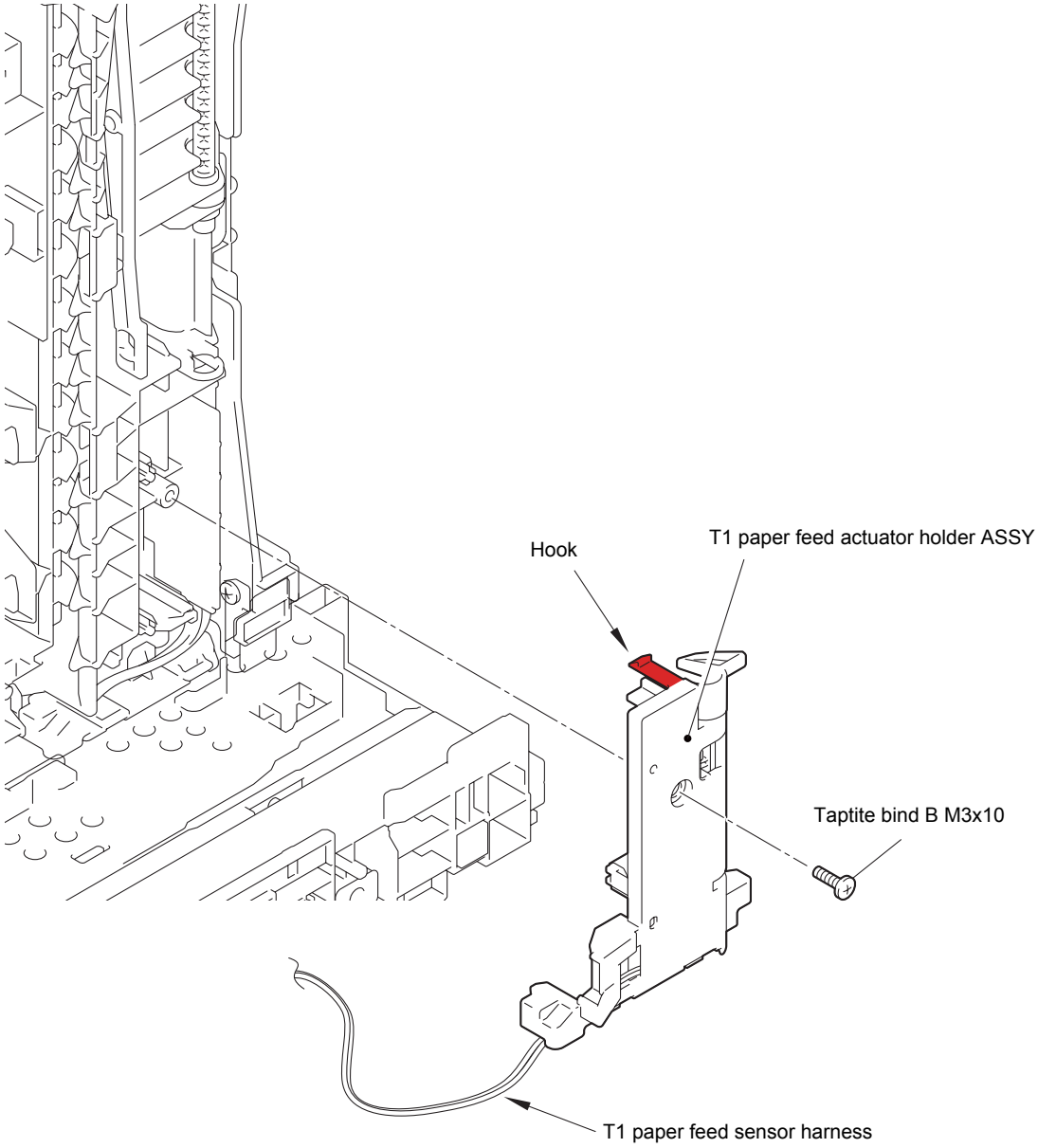

Fig. 3-139

Harness routing: Refer to "4.High-voltage power supply PCB ASSY".

(3) Turn the T1 paper feed actuator in the direction of arrow 3a, and push the hook on the T1 paper feed actuator holder to slide the T1 paper feed actuator in the direction of arrow 3b to remove it from the T1 paper feed actuator holder.

(4) Remove the T1 paper feed actuator spring from the T1 paper feed actuator.

(5) Release the T1 paper feed sensor harness from the T1 paper feed actuator holder, and then release the hook to remove the T1 paper feed sensor PCB ASSY from the T1 paper feed actuator holder.

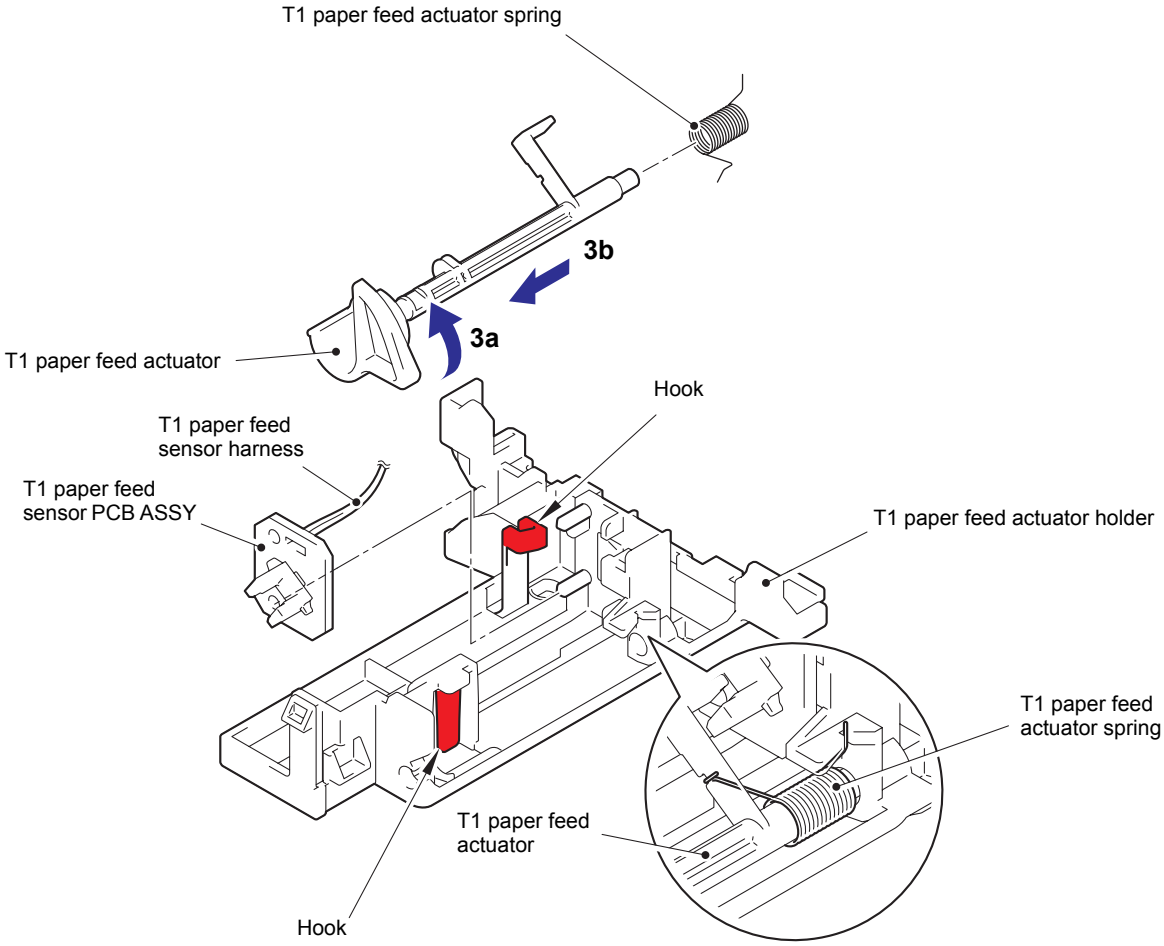

Fig. 3-140

Harness routing: Refer to "4.High-voltage power supply PCB ASSY".

9.44 MP paper empty sensor PCB ASSY / MP paper empty actuator 1 / MP paper empty actuator 2

(1) Remove the five taptite bind B M4x12 screws, and remove the main frame R from the machine. Then pull out the low-voltage power supply harness from the main frame R.

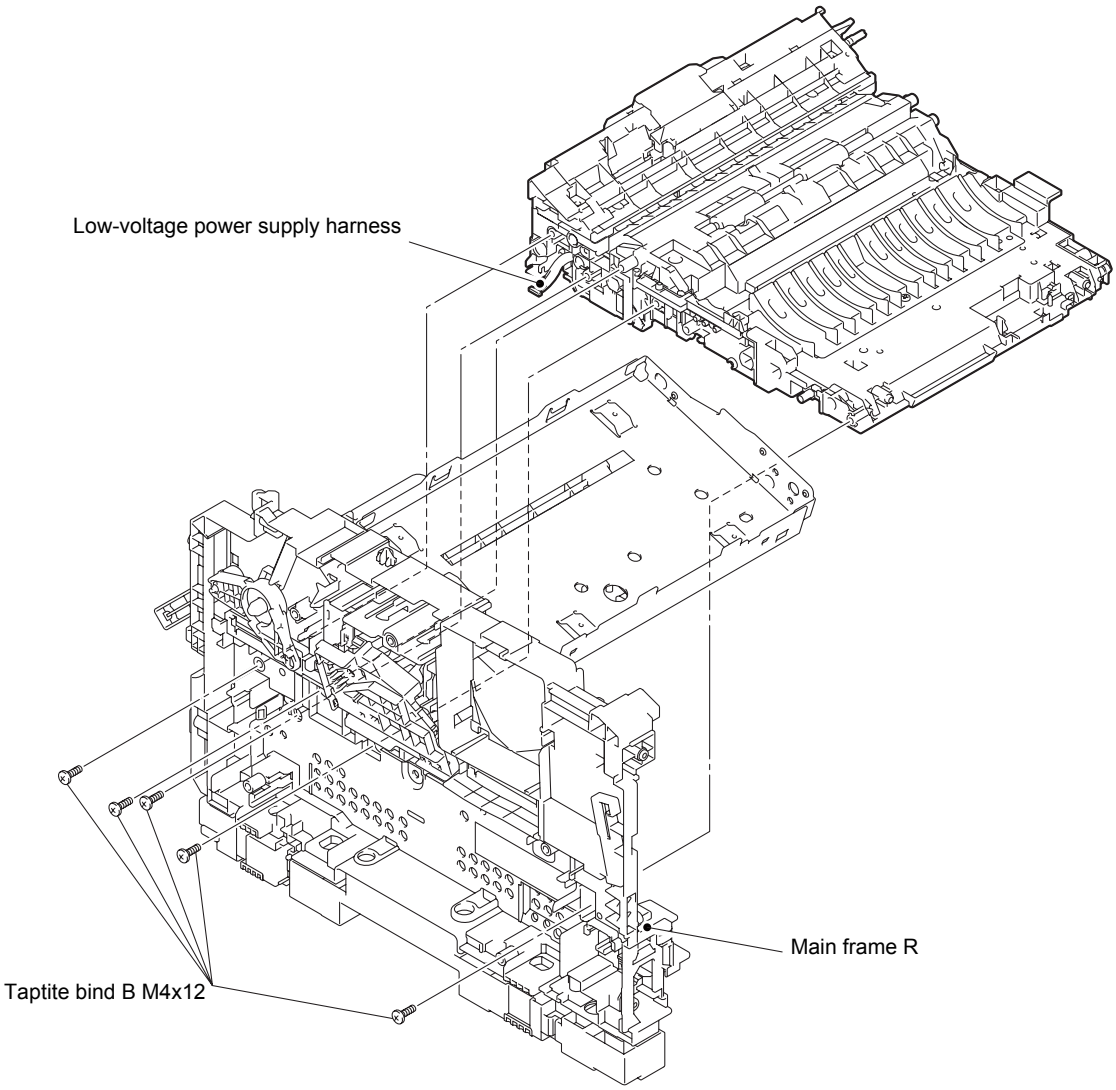

Fig. 3-141

(2) Release the MP paper empty sensor harness from the paper feed frame ASSY.

(3) Remove the two taptite bind B M3x10 screws, and release the two hooks to remove the MP feed frame from the paper feed frame ASSY. Then pull out the MP paper empty sensor harness from the paper feed frame ASSY.

(4) Remove the MP lift arm spring from the paper feed frame ASSY.

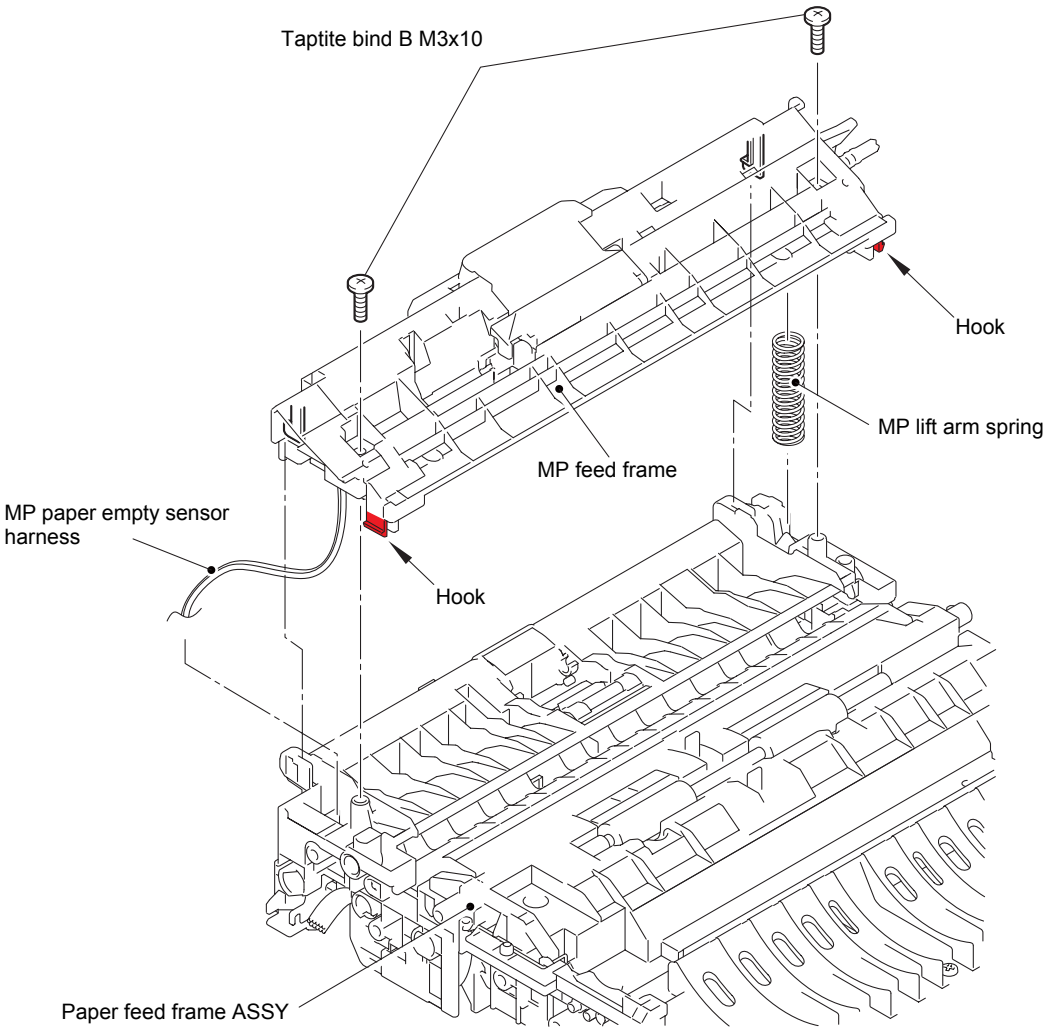

Fig. 3-142

Harness routing: Refer to "4.High-voltage power supply PCB ASSY".

(5) Turn MP paper empty actuator 2 in the direction of arrow 5a, and push the hook in the direction of arrow 5b to slide MP paper empty actuator 1 in the direction of arrow 5c to remove it from the MP feed frame in the direction of arrow 5d.

(6) Turn MP paper empty actuator 2 in the direction of arrow 5a, and remove it from the MP feed frame in the direction of arrow 6.

(7) Remove the taptite bind B M3x10 screw, and remove the MP paper empty sensor PCB ASSY from the MP feed frame.

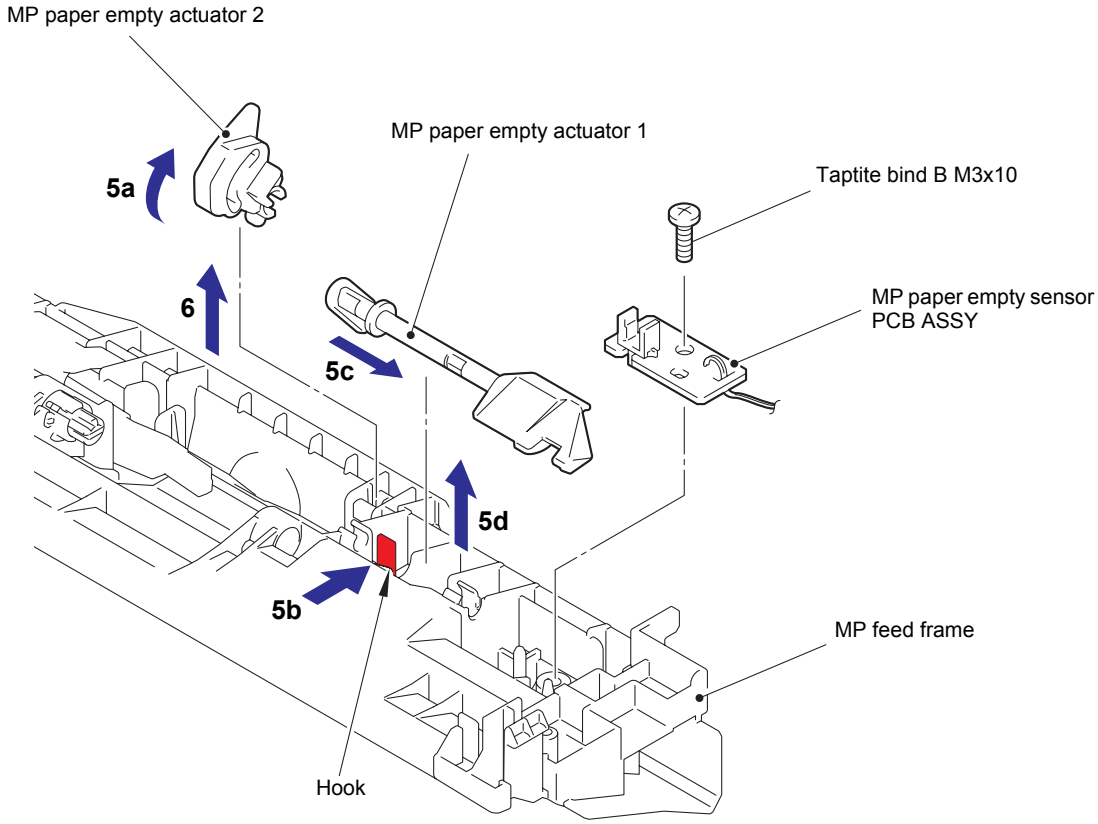

Fig. 3-143

Assembling Note:

- Insert the end of MP paper empty actuator 1 into the groove on MP paper empty actuator 2.

9.45 Registration front/rear sensor PCB ASSY / Registration front actuator / Registration rear actuator / Registration actuator spring

(1) Release the low-voltage power supply harness from the securing fixtures.

(2) Release the two hooks, and remove the paper feed frame from the feed chute.

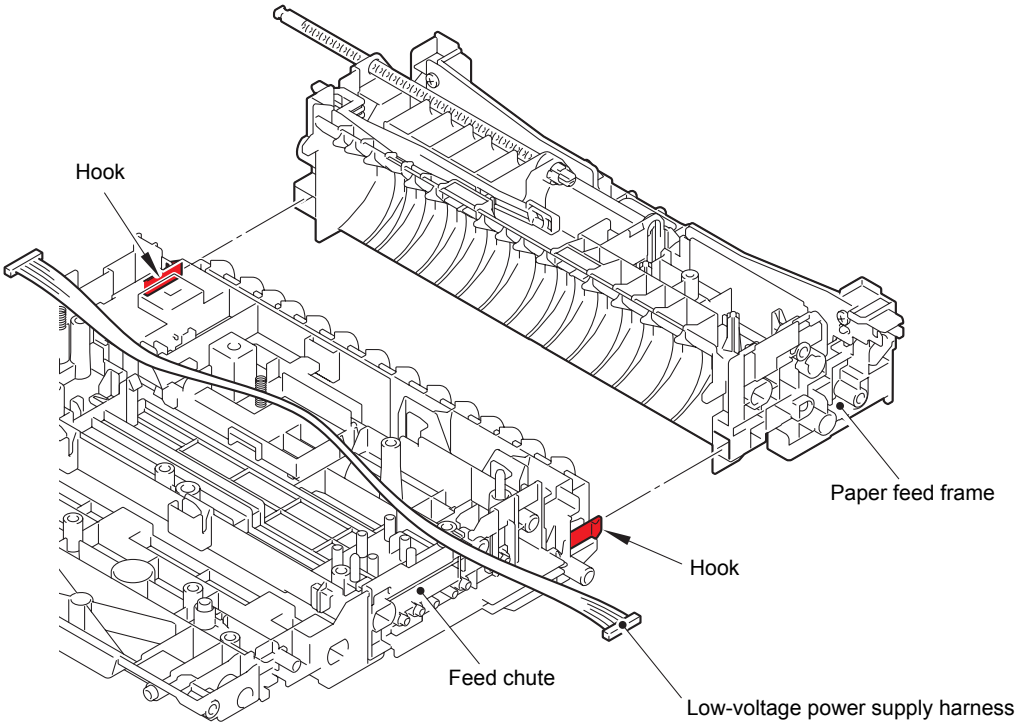

Fig. 3-144

Harness routing: Refer to "7.Low-voltage power supply PCB ASSY".

(3) Remove the earth registration spring from the hook on the feed chute, and remove the earth registration spring from the feed chute.

(4) Remove the electrode TR from the hook on the registration actuator holder ASSY, and remove the electrode TR from the registration actuator holder ASSY.

(5) Release the hook, and remove the registration actuator holder ASSY from the feed chute.

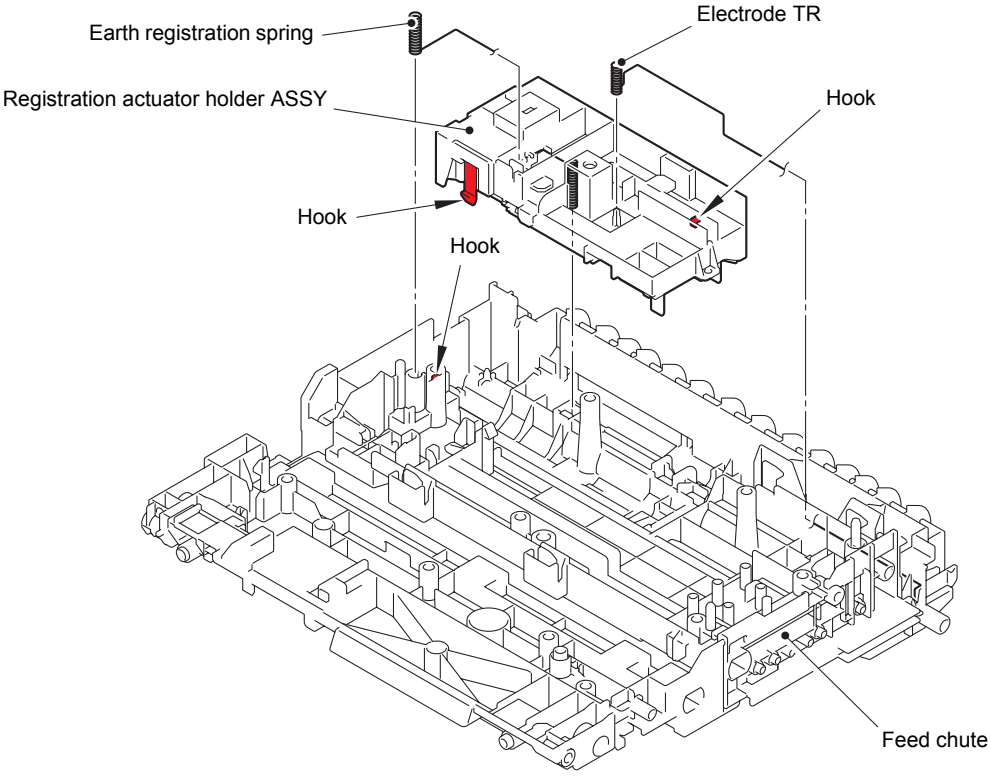

Fig. 3-145

(6) Remove the registration actuator spring from the registration front actuator and the registration actuator holder ASSY.

(7) Turn the registration front actuator to remove it from the guide, and then slide it in the direction of the arrow to remove it from the registration actuator holder ASSY.

(8) Remove the registration actuator spring from the registration rear actuator and the registration actuator holder ASSY.

(9) Turn the registration rear actuator to remove it from the guide, and then slide it in the direction of the arrow to remove it from the registration actuator holder ASSY.

(10) Release the registration front/rear sensor harness from the securing fixtures, and then release the hook to remove the registration front/rear sensor PCB ASSY from the registration actuator holder ASSY.

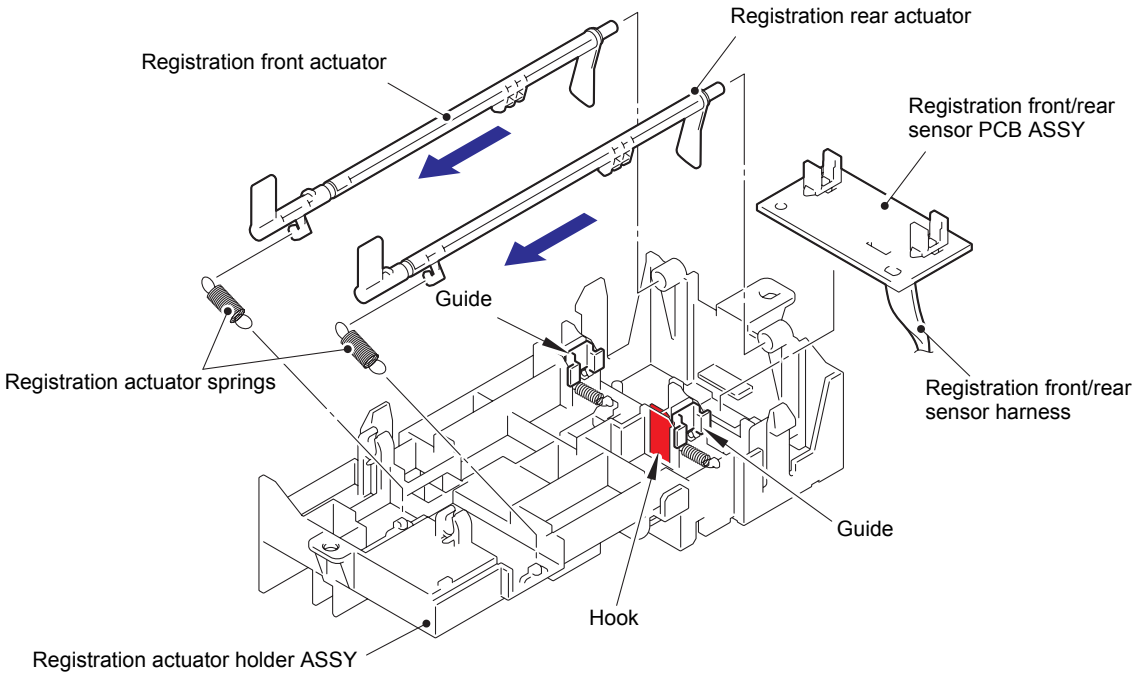

Fig. 3-146

Harness routing: Refer to "4.High-voltage power supply PCB ASSY".

10. DISASSEMBLY PROCEDURE (LT UNIT)

10.1 Paper tray 2

(1) Remove the two taptite bind B M4x12 screws from paper tray 2.

(2) Lift the plate to remove "A" on the T2 tray indicator from the plate, remove the four bosses, and remove the T2 tray cover from paper tray 2.

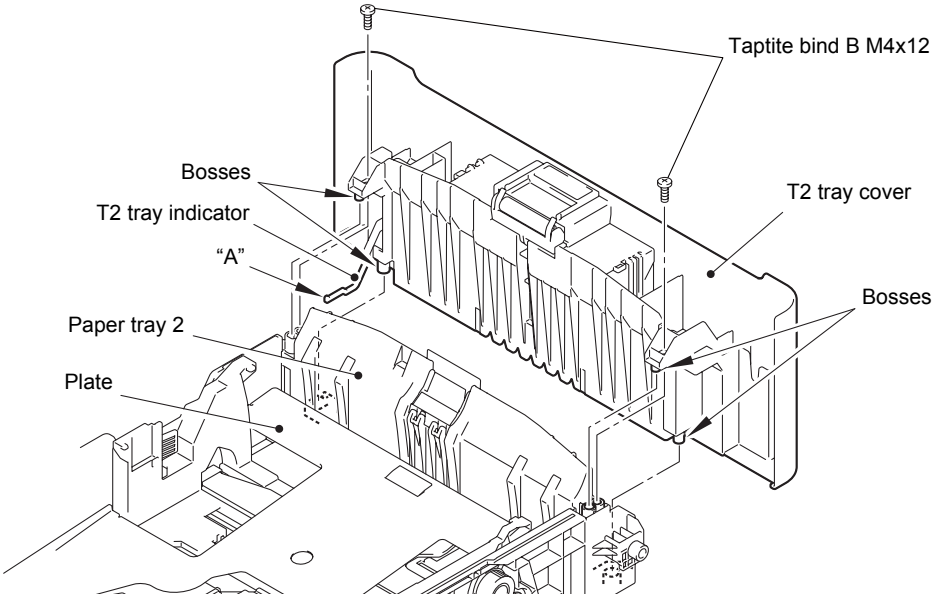

Fig. 3-147

(3) Release the two hooks on the T2 separation pad ASSY from paper tray 2.

(4) Push both arms of the T2 separation pad ASSY in the direction of the arrows to remove both pins, and remove the T2 separation pad ASSY from paper tray 2.

(5) Remove the T2 separation pad spring from the T2 separation pad ASSY.

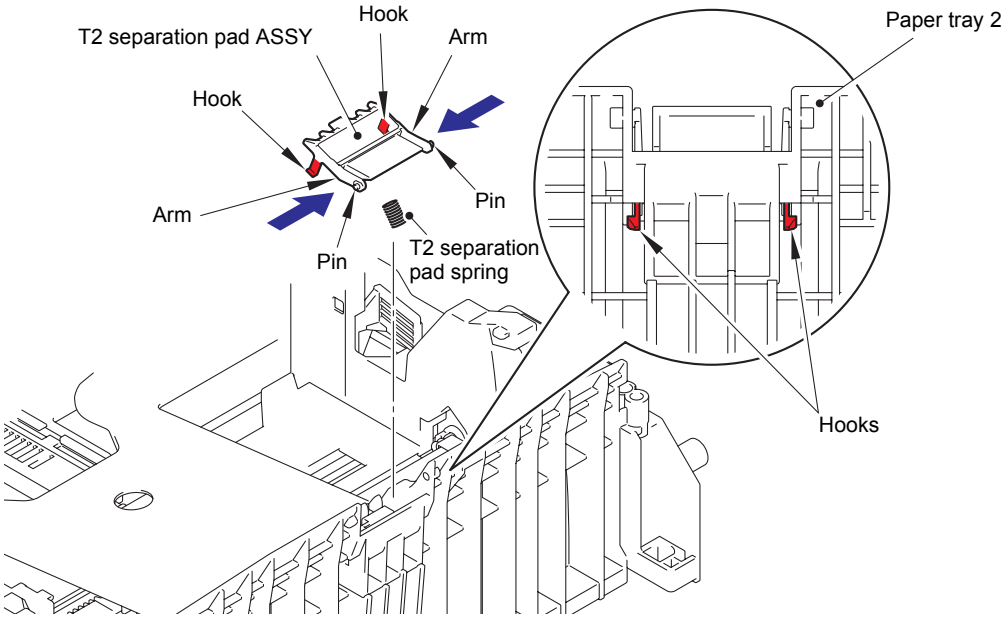

Fig. 3-148

(6) Push the hook on the lift gear Z48M10 while lifting the plate-up plate, and remove the lift gear Z48M10 from paper tray 2.

(7) Remove the gear Z22M10 and the idle gear Z18M10 from paper tray 2.

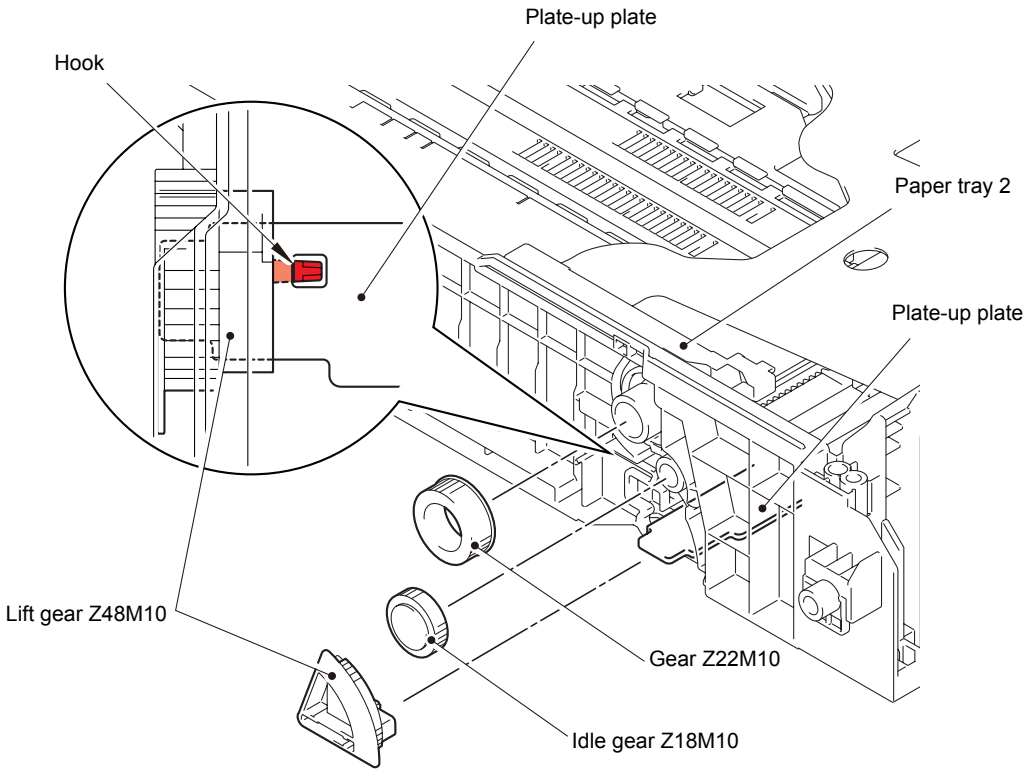

Fig. 3-149

10.2 T2 roller holder ASSY

(1) Push the T2 lift arm in the direction of arrow 1a, and remove the boss on the T2 roller holder ASSY from the T2 lift arm. Then turn the T2 roller holder ASSY in the direction of arrow 1b.

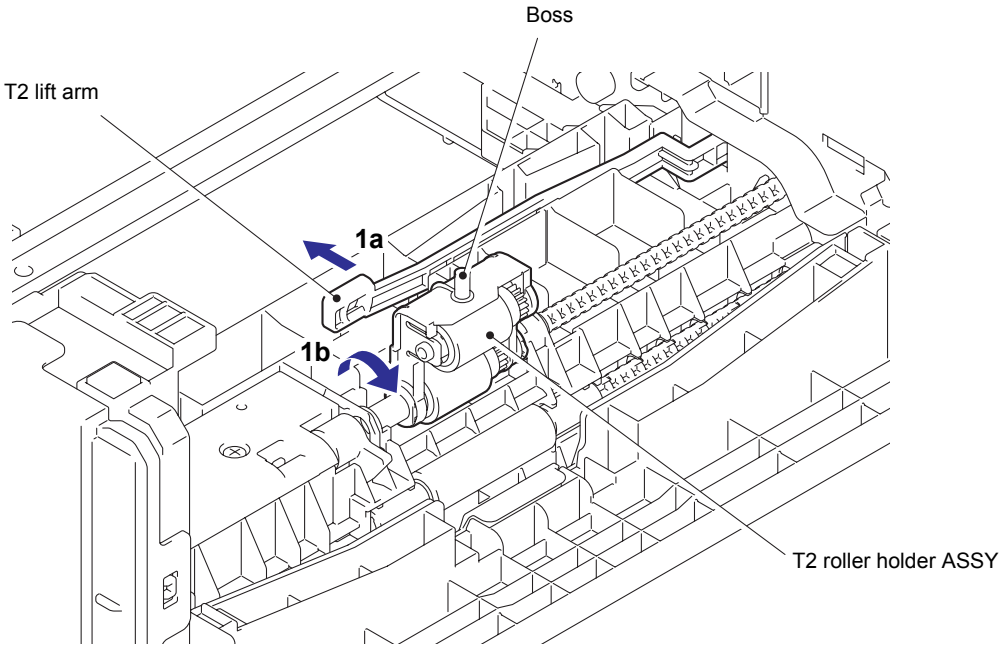

Fig. 3-150

(2) Slide the T2 roller holder ASSY in the direction of arrow 2 to remove it from the T2 separation roller shaft.

(3) Lift the right side of the T2 roller holder ASSY in the direction of arrow 3a, and pull the T2 roller holder ASSY in the direction of arrow 3b to remove it from the LT unit.

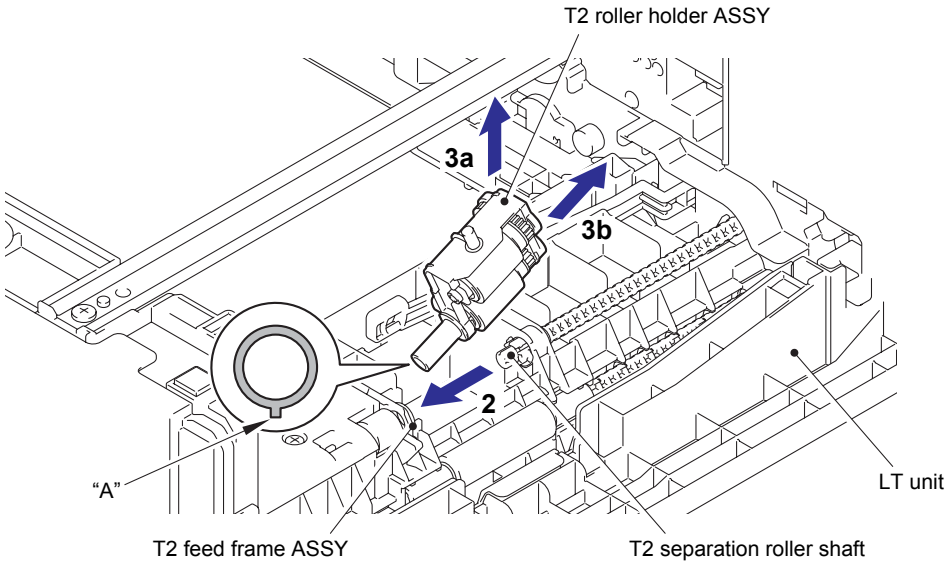

Fig. 3-151

Assembling Note:

- When attaching the T2 roller holder ASSY, engage "A" on the shaft of the T2 roller holder ASSY with the hole on the T2 feed frame ASSY, and insert the shaft into the hole.

10.3 T2 side cover L

(1) Remove the taptite bind B M4x12 screw from the front side of the T2 side cover L.

(2) Release the two front hooks, two top hooks and four bottom hooks, and remove the T2 side cover L from the LT unit.

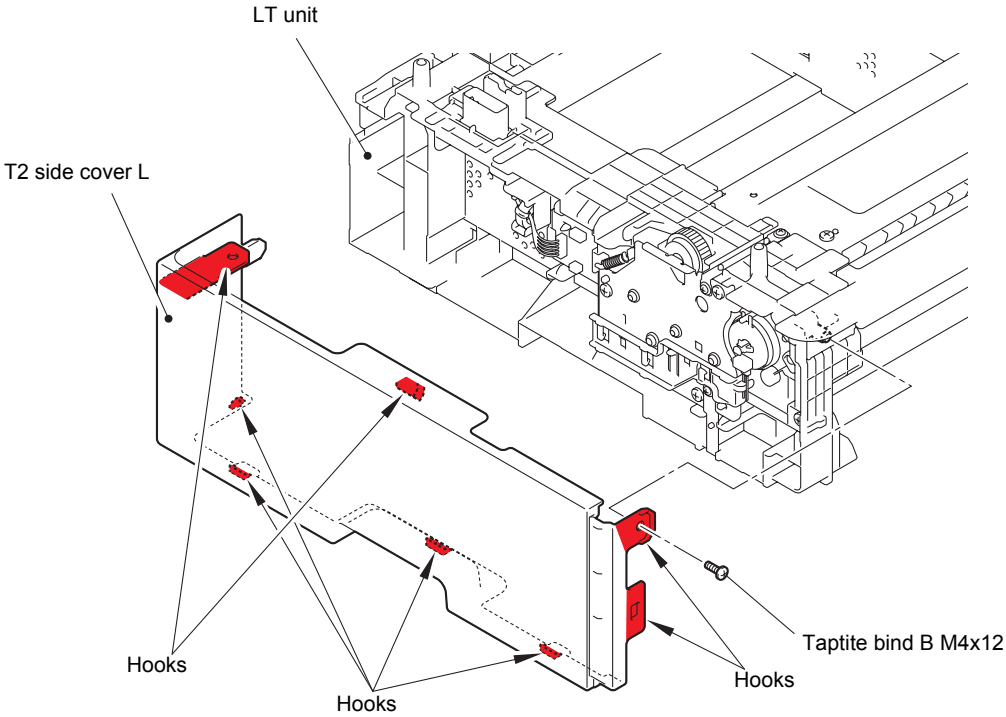

Fig. 3-152

10.4 T2 side cover R

(1) Remove the taptite bind B M4x12 screw from the front side of the T2 side cover R.

(2) Release the two front hooks, two top hooks and four bottom hooks, and remove the T2 side cover R from the LT unit.

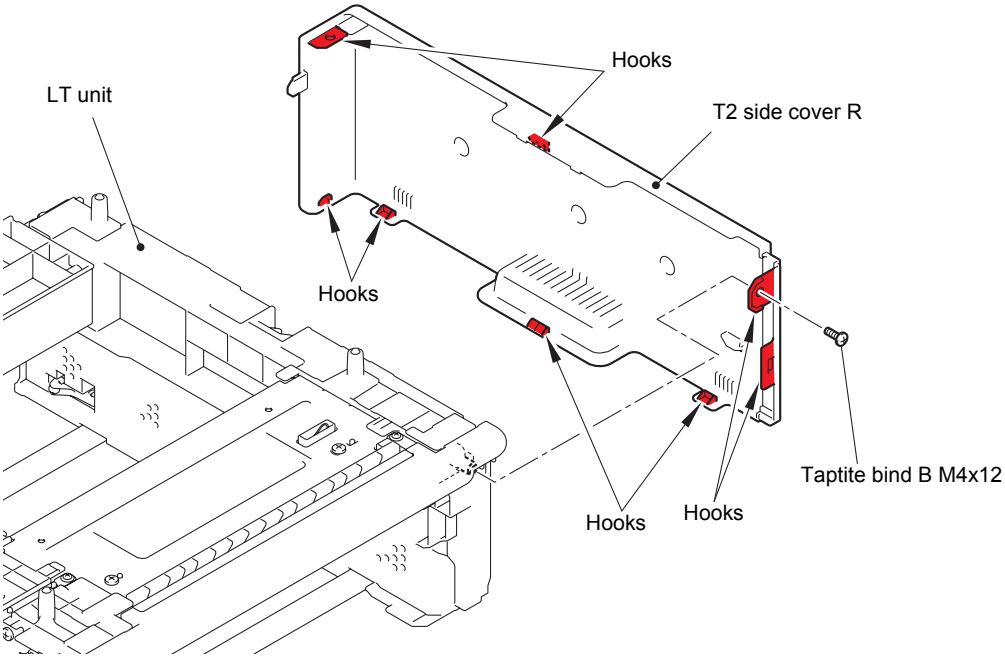

Fig. 3-153

10.5 T2 front cover ASSY

(1) Remove the taptite cup S M3x8 SR screw from the T2 front cover ASSY.

(2) Release the two hooks on the T2 front cover ASSY, and remove the T2 front cover ASSY from the LT unit.

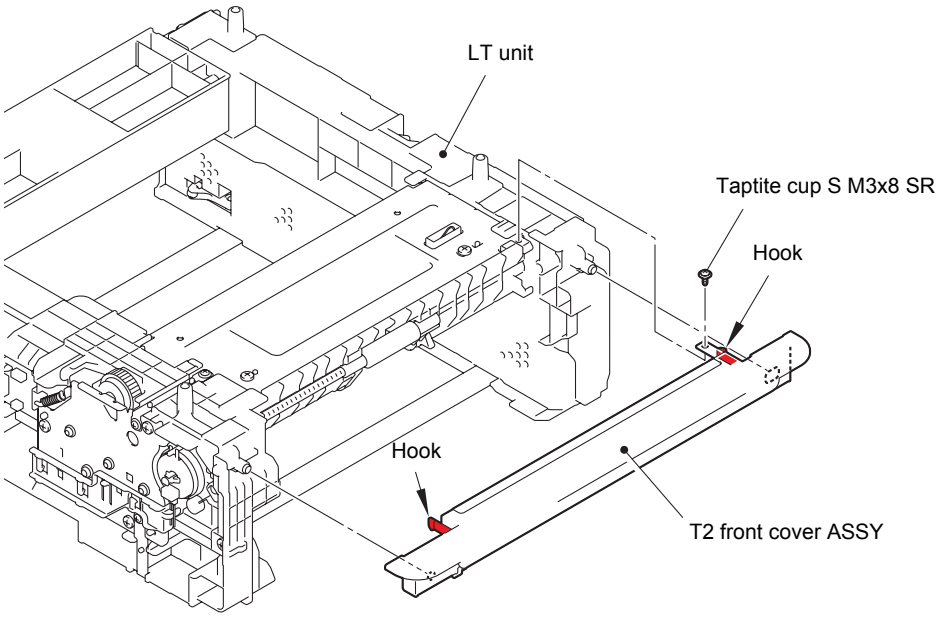

Fig. 3-154

10.6 T2 relay PCB ASSY

(1) Disconnect all harnesses from the T2 relay PCB ASSY.

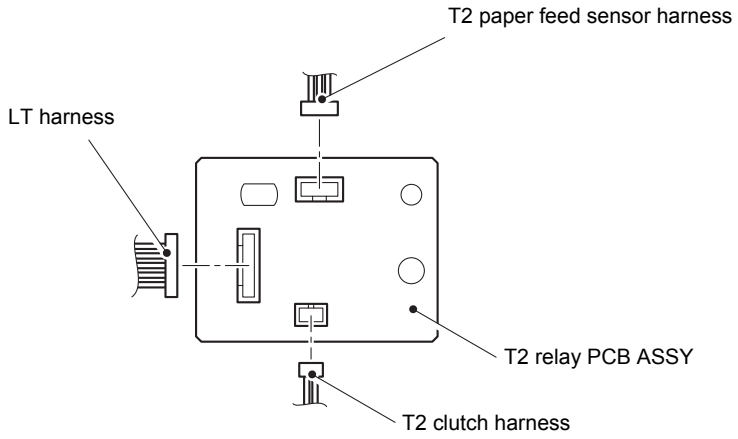

Fig. 3-155

(2) Release the hook to remove the core of the LT connector ASSY (T2) from the LT unit.

(3) Release the hook to remove the T2 relay PCB ASSY from the LT unit.

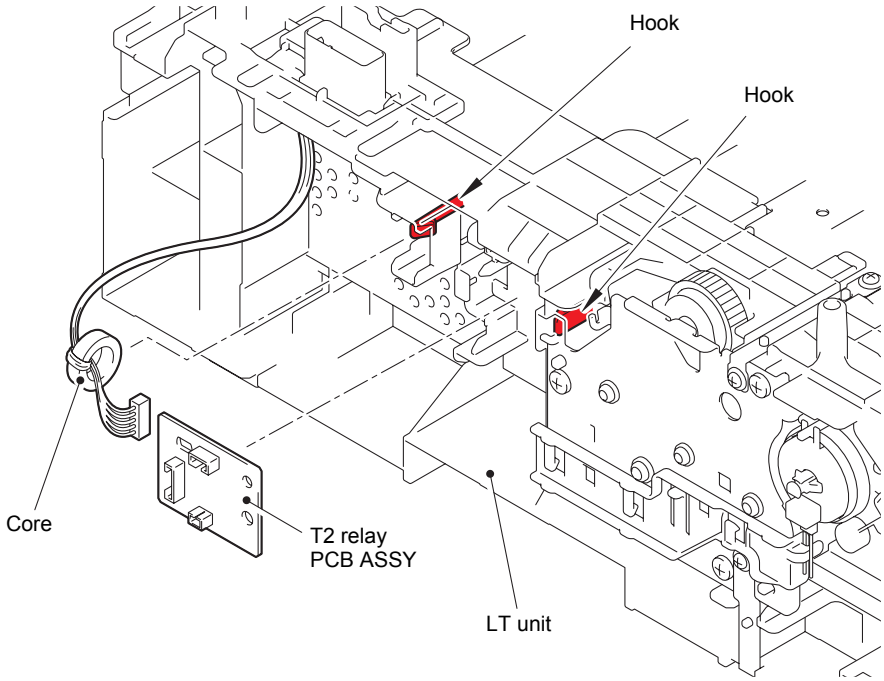

Fig. 3-156

10.7 T2 clutch

(1) Release the T2 clutch harness from the securing fixtures.

(2) Release the hook on the T2 clutch, and remove the T2 clutch from the LT unit.

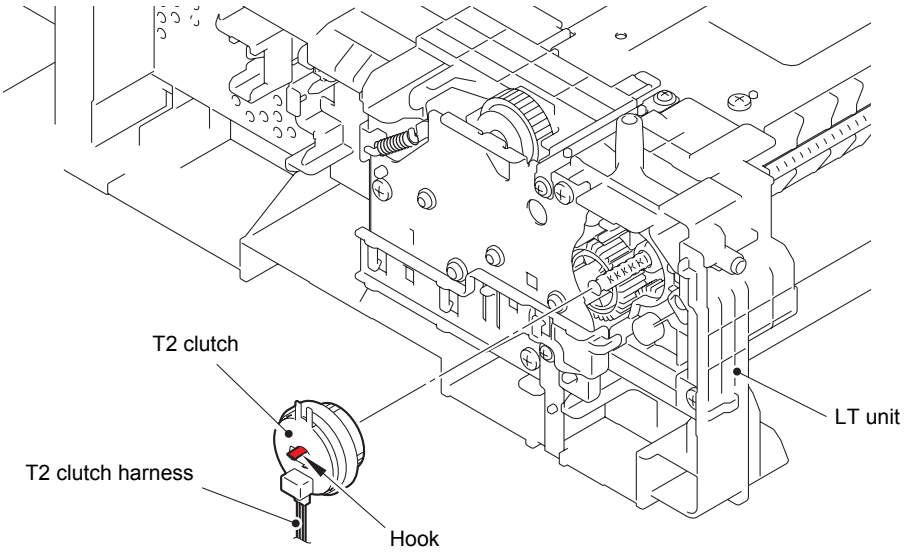

Fig. 3-157

Confidential

10.8 T2 paper feed sensor PCB ASSY

(1) Remove the four taptite bind B M4x12 screws securing the two under bars, and remove the two under bars from the LT unit.

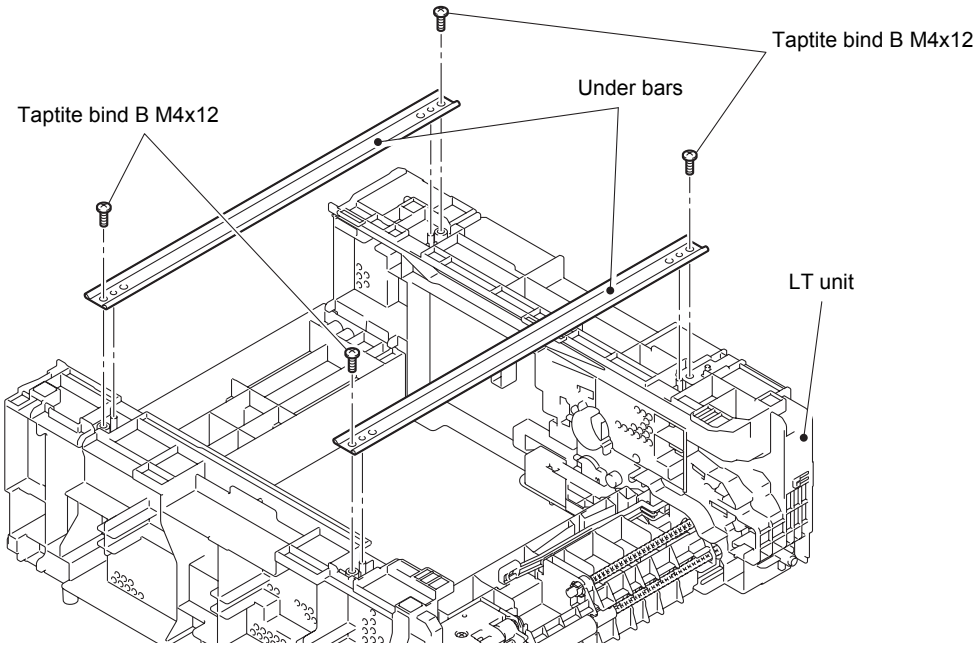

Fig. 3-158

(2) Remove the two taptite cup S M3x8 SR screws and the two taptite bind B M4x12 screws, and remove the T2 frame R unit from the LT unit.

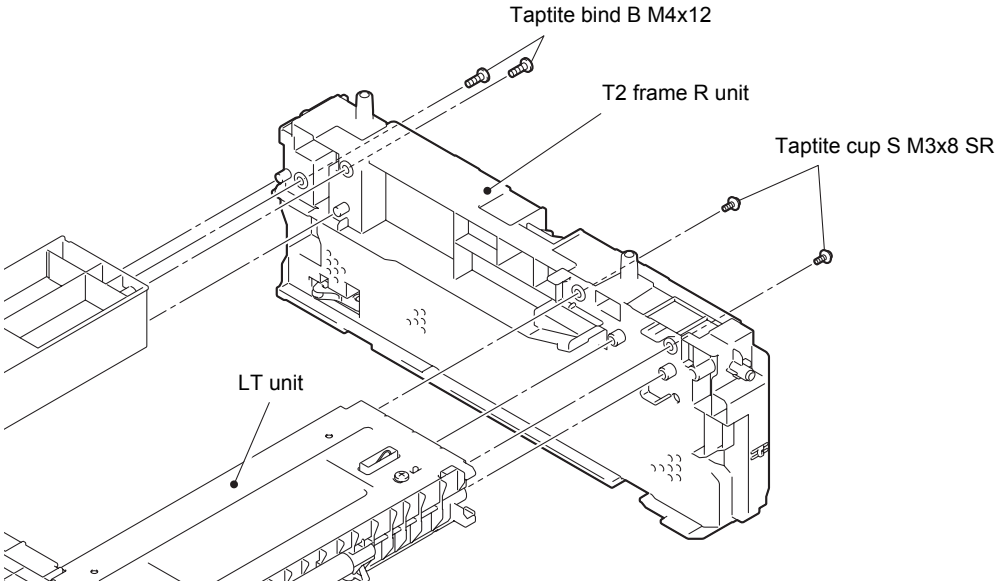

Fig. 3-159

(3) Remove the three taptite cup S M3x8 SR screws, and remove the T2 paper feed frame unit from the LT unit. Then pull out the T2 paper feed sensor harness from the LT unit.

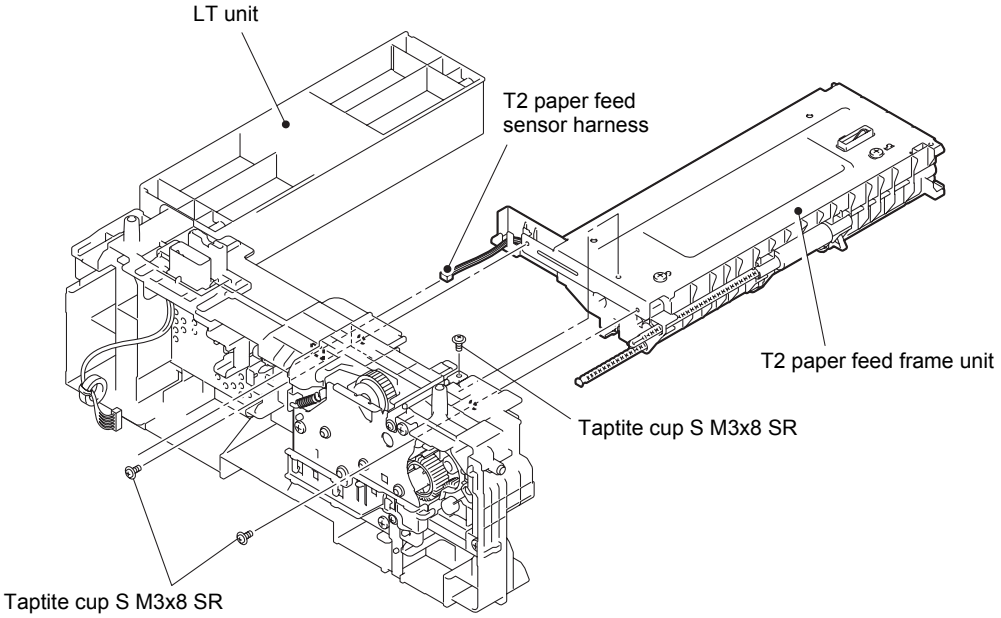

Fig. 3-160

(4) Remove the two taptite bind B M4x12 screws, and remove the T2 front beam from the T2 paper feed frame unit.

(5) Release the T2 paper feed sensor harness from the securing fixtures.

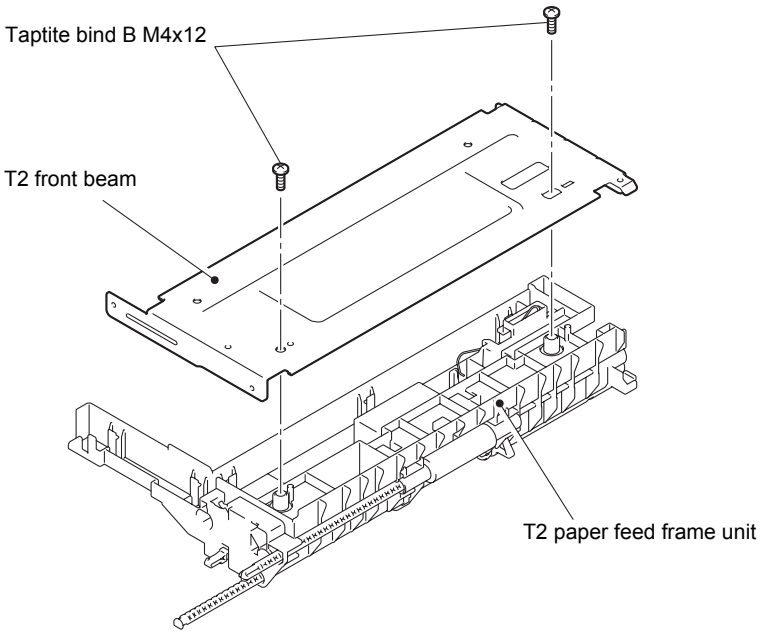

Fig. 3-161

(6) Remove the taptite bind B M3x10 screw, and release the hook to remove the T2 paper feed actuator holder ASSY from the T2 paper feed frame unit. Then pull out the T2 paper feed sensor harness from the T2 paper feed frame unit.

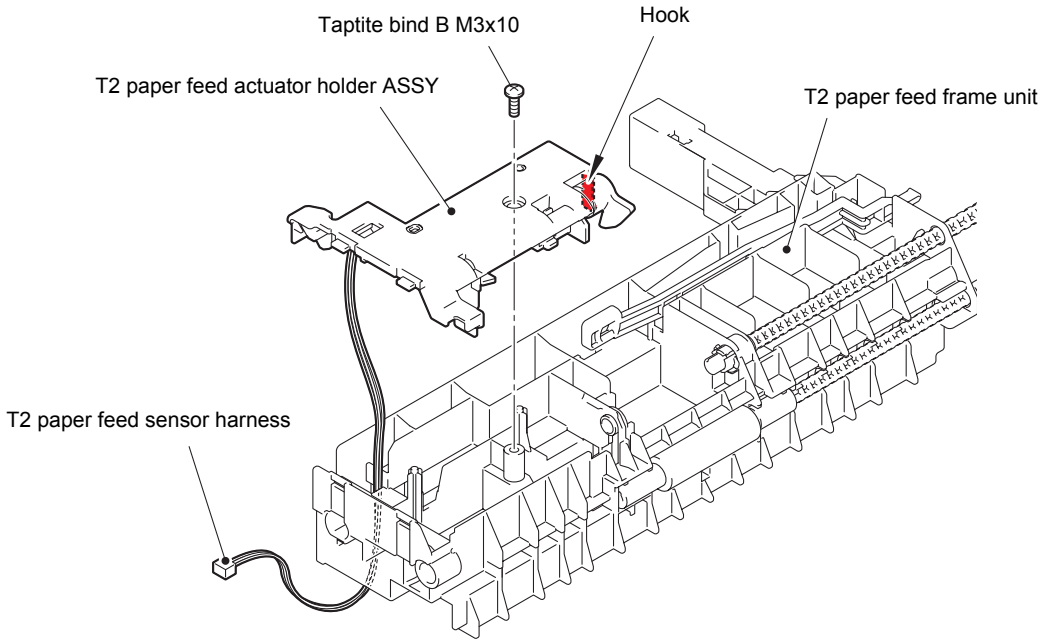

Fig. 3-162

(7) Turn the T2 paper feed actuator in the direction of arrow 7a, and push the hook on the T2 paper feed actuator holder ASSY to slide the T2 paper feed actuator in the direction of arrow 7b to remove it from the T2 paper feed actuator holder ASSY.

(8) Remove the T2 paper feed actuator spring from the T2 paper feed actuator.

(9) Release the T2 paper feed sensor harness from the T2 paper feed actuator holder ASSY, and then release the hook to remove the T2 paper feed sensor PCB ASSY from the T2 paper feed actuator holder ASSY.

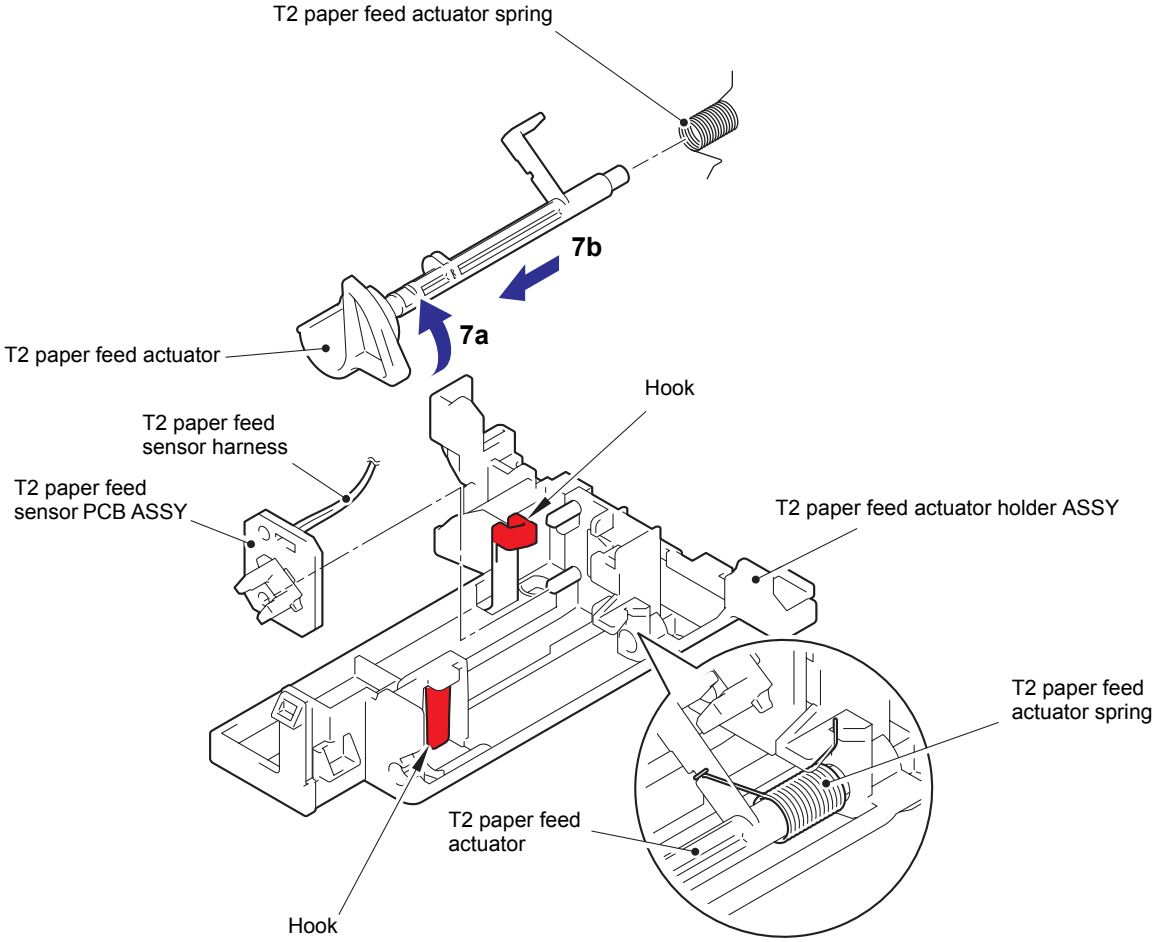

Fig. 3-163

10.9 T2 back cover

(1) Remove the two taptite bind B M4x12 screws, and remove the T2 back cover from the LT unit.

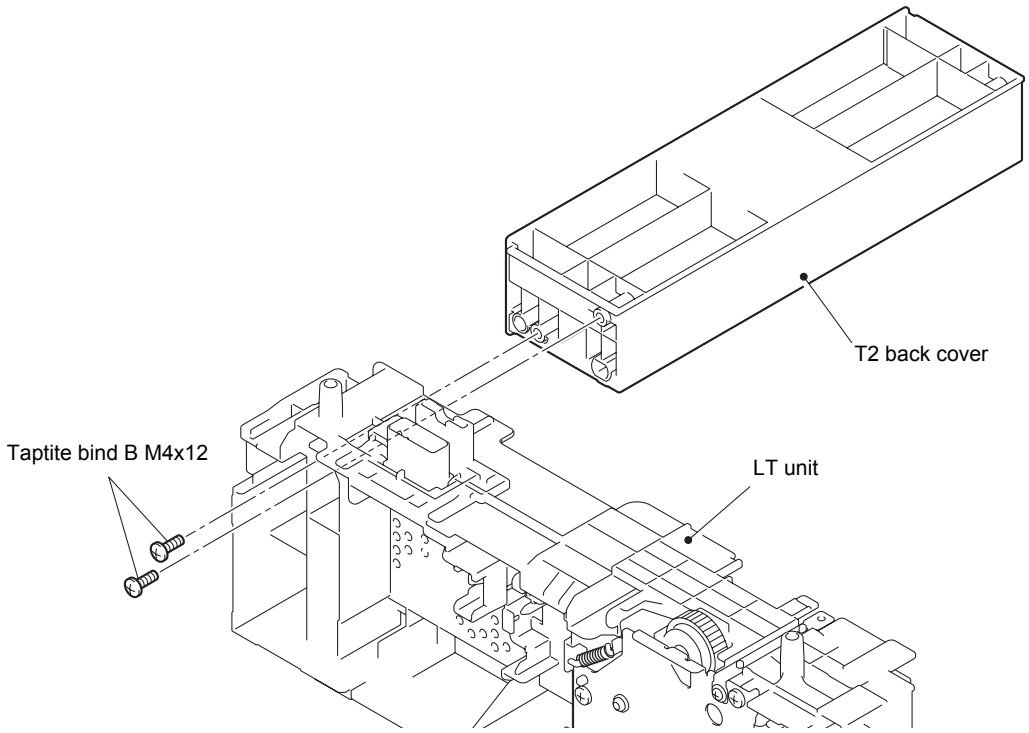

Fig. 3-164

10.10 LT connector ASSY (T2)

(1) Release the two hooks, and remove the LT connector ASSY (T2) from the LT unit.

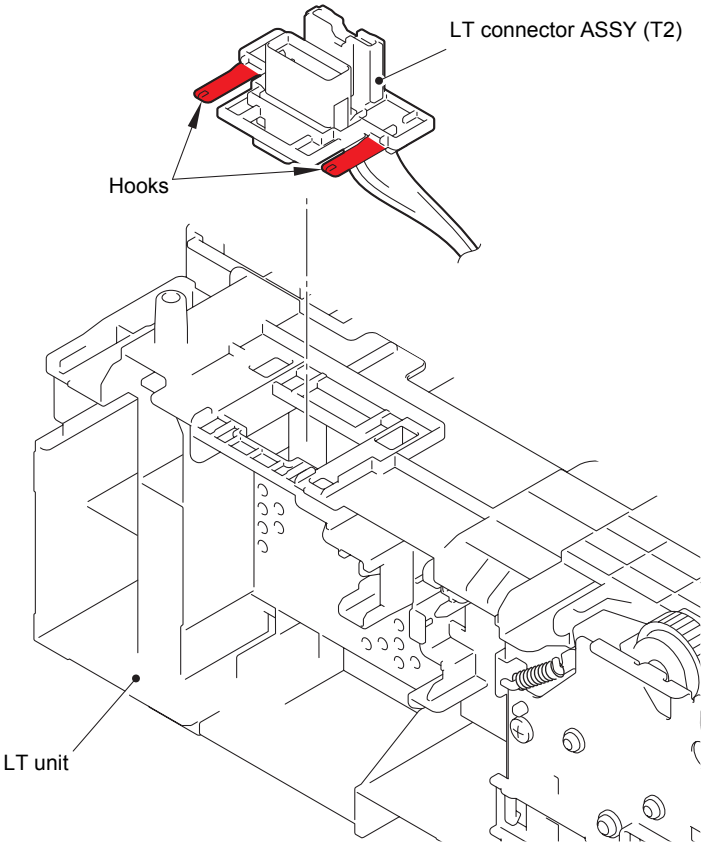

Fig. 3-165

Confidential

CHAPTER 4

ADJUSTING AND UPDATING SETTINGS AS REQUIRED AFTER PARTS REPLACEMENT

CHAPTER 4 ADJUSTING AND UPDATING SETTINGS AS REQUIRED AFTER PARTS REPLACEMENT

This chapter describes adjustments and updating of settings, which are required if the main PCB ASSY and some other parts have been replaced.

CONTENTS

1. IF YOU REPLACE THE MAIN PCB ASSY 4-1
   - 1.1 Installing Firmware 4-2
     - 1.1.1 Checking firmware version 4-2
     - 1.1.2 Installing firmware using USB flash memory 4-2
     - 1.1.3 Installing firmware using PC 4-3
   - 1.2 Setting by Country 4-3
   - 1.3 Initializing the EEPROM of the Main PCB ASSY 4-3
   - 1.4 Setting Serial Number and Entering Adjusted Value of Laser Unit 4-4
   - 1.5 Acquiring White Level Data 4-5
   - 1.6 Adjusting Touch Panel (Touch Panel Models Only) 4-5
2. IF YOU REPLACE THE LASER UNIT 4-6
   - 2.1 Entering Adjusted Value of Laser Unit 4-7
3. IF YOU REPLACE THE LOW-VOLTAGE POWER SUPPLY PCB ASSY 4-9
   - 3.1 Resetting Irregular Power Supply Detection Counter 4-9
4. IF YOU REPLACE THE HIGH-VOLTAGE POWER SUPPLY PCB ASSY 4-10
   - 4.1 Initializing Pre-discharge Detection Parameters 4-10
5. IF YOU REPLACE ANY PERIODIC REPLACEMENT PARTS 4-11
6. IF YOU REPLACE THE CONTROL PANEL ASSY OR TOUCH PANEL ASSY 4-12
   - 6.1 Installing Firmware (Touch Panel Models Only) 4-12
     - 6.1.1 Checking firmware version 4-12
     - 6.1.2 Installing firmware using USB flash memory 4-13
     - 6.1.3 Installing firmware using PC 4-13
   - 6.2 Adjusting Touch Panel (Touch Panel Models Only) 4-14
   - 6.3 Checking LCD Operation 4-14
   - 6.4 Checking Control Panel Operation 4-14
7. IF YOU REPLACE THE DOCUMENT SCANNER UNIT, ADF UNIT (DUPLEX SCANNING MODEL), OR CIS UNIT 4-15
   - 7.1 Acquiring White Level Data (function code: 55) 4-15

1. IF YOU REPLACE THE MAIN PCB ASSY

<What to do after replacement>

- Installing firmware (panel firmware, sub firmware, and main firmware)
- Setting by country (function code: 74)
- Initializing the EEPROM of the main PCB ASSY (function code: 01)
- Setting serial number and entering adjusted value of laser unit
- Acquiring white level data (function code: 55)
- Adjusting touch panel (function code: 61)

■ What you need to prepare

(1) One USB cable

(2) Create a temporary folder on the C drive of the computer (Windows® XP or higher).

(3) Service setting tool (BrUsbn.zip)
Copy this file into the temporary folder created on the C drive. Extract the copied file and double-click "BrUsbsn.exe" to start it.

(4) Download utility (FILEDG32.EXE)
Copy this file into the temporary folder created on the C drive.

(5) Maintenance driver (MaintenanceDriver.zip)
When the maintenance driver is not installed, copy this file into the temporary folder created on the C drive, and extract the copied file. Refer to "APPENDIX 3 INSTALLING MAINTENANCE DRIVER" for the installation procedure.

(6) Firmware

Panel firmware (Touch panel models only)	(E.g.) LZXXXX_$.upd (firmware installation using PC) (E.g.) LZXXXX_$.djf (firmware installation using USB flash memory)
Sub firmware	(E.g.) LZXXXX_$.upd (firmware installation using PC) (E.g.) LZXXXX_$.djf (firmware installation using USB flash memory)
Main firmware	(E.g.) LZXXXX_$.upd (firmware installation using PC) (E.g.) LZXXXX_$.djf (firmware installation using USB flash memory)
LZXXXX: First six digits of the part number of the firmware $: Alphabetic character representing the revision version of the firmware	

(7) USB flash memory

1.1 Installing Firmware

1.1.1 Checking firmware version

Check that the firmware installed on the main PCB is the latest version. If it is the latest version, there is no need to install the firmware. If it is not, be sure to install the firmware to the main PCB as described in "1.1 Installing Firmware".

<How to check firmware version>

While the machine is in the ready state, press the [*] and [#] buttons simultaneously. The firmware version information is displayed on the LCD.

1.1.2 Installing firmware using USB flash memory

Save the program file on the USB flash memory, and connect it to the machine directly to install the firmware.

Note:

- Installing the firmware using a USB flash memory is not possible in deep sleep mode. Press the [Start] button to quit deep sleep mode.
- Check that the there is sufficient free space on the USB flash memory before saving the program file on the USB flash memory.
- When installing the firmware using a USB flash memory fails during the procedure and an error is displayed on the LCD or no characters are displayed on the LCD, change to firmware installation using a PC.
- [Touch panel models only]
  When the main firmware installed is the latest version and the panel firmware installed is not the latest version, error code 0F00 is displayed on the LCD, and firmware installation using a USB flash memory becomes inoperable. In this case, refer to "1.1.3 Installing firmware using PC" in this chapter to install the panel firmware.

(1) Save the program files required for firmware installation (e.g. LZXXXX_$.djf) on the USB flash memory.

(2) While the machine is in the ready state, insert the USB flash memory into the USB memory port on the front of the machine.

(3) When the machine recognizes the USB flash memory, names of the files saved are displayed. Press the [▲] or [▼] button to select the panel firmware file, and press the [OK] button.
Install the panel firmware, sub firmware, and main firmware in this order.
(Start installing from the panel firmware for touch panel models, and from the sub firmware for other models.)

(4) When "Program update/Press start" is displayed on the LCD, press the [OK] or [Start] button. The print data lamp flashes with "Program Updating/Do not turn off" displayed, and installation starts. Do not turn off the power switch of the machine.

(5) When installation is completed, the machine restarts automatically.

(6) Repeat steps (3) to (5) to install the sub firmware and the main firmware.

(7) When all firmware has been installed, remove the USB flash memory from the USB memory port.

1.1.3 Installing firmware using PC

(1) Press and hold the [5] button and turn ON the power switch of the machine.
"▮▮▮▮▮▮▮▮" is displayed on the LCD, and firmware installation mode is entered.

(2) Connect the computer to the machine with the USB cable.

(3) Turn ON the power switch of the computer.

(4) Open the temporary folder and double-click "FILEDG32.EXE" to start it, and select the "Brother Maintenance USB Printer."

(5) Drag and drop the panel firmware (LZXXXX_$_upd) in the same folder onto the "Brother Maintenance USB Printer" icon. The panel firmware file is loaded to the machine, and installing to the flash ROM starts.
(Start installing from the panel firmware for touch panel models, and from the sub firmware for other models.)

(6) Vertical stripes flash alternately on the LCD during installation. When installation is completed, the machine restarts and returns to the ready state automatically.
Do not disconnect the USB cable or turn OFF the power switch of the computer until installation is completed.

(7) Repeat steps (5) to (6) to install the sub firmware and the main firmware.

Note:
- Install the panel firmware (touch panel models only), sub firmware, and main firmware in this order.

(8) Turn OFF the power switch of the machine, and disconnect the USB cable.

1.2 Setting by Country

(1) Enter maintenance mode, and press the [7] and [4] buttons in this order. The country code currently set is displayed on the LCD.

(2) Enter the country code of your country. Refer to "1.3.23 Setting by country (function code: 74)" in Chapter 5 for the country code.

(3) Press the [Start] button. The setting is saved, and the machine returns to the initial state of the maintenance mode.

1.3 Initializing the EEPROM of the Main PCB ASSY

(1) Press the [0] and [1] buttons in this order in the initial state of maintenance mode.
"PARAMETER INIT" is displayed on the LCD. When initializing the EEPROM of the Main PCB ASSY is completed, the machine returns to the initial state of maintenance mode.

1.4 Setting Serial Number and Entering Adjusted Value of Laser Unit

(1) Connect the computer to the machine with the USB cable in the initial state of maintenance mode.

(2) Double-click the "BrUsbsn.exe" file that was copied to the temporary folder to start it.

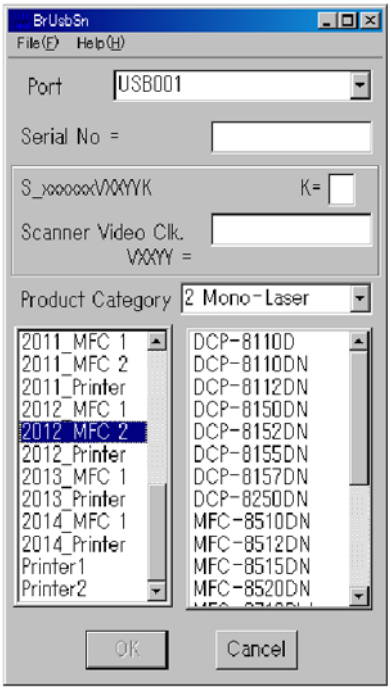

(3) Click "2012_MFC 2".

(4) In the [Port] field, select the port number assigned to the Brother Maintenance USB Printer. If the port number is unknown, follow the steps below to check it.

1) Click [Start], [Settings], and [Printers and Faxes]. The Printers and Faxes window appears.

2) Right-click the Brother Maintenance USB Printer icon.

3) Click [Properties]. The Brother Maintenance USB Printer Properties window appears.

4) Click the [Ports] tab. The Brother Maintenance USB Printer port number is displayed.

(5) Enter the serial number (15 digits) of the machine in the [Serial No] field.

(6) Check the number on the laser serial number label attached to the location shown in the illustration below.

ex.) SM9922021234567_55450B

a

b

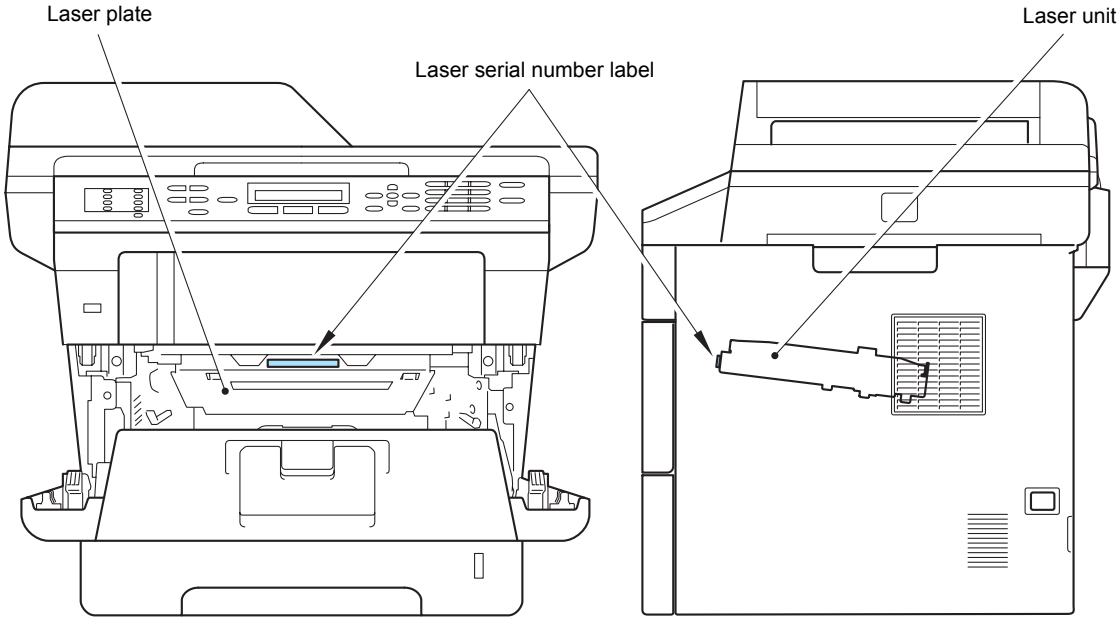

Fig. 4-1

(7) Enter the value "a" on the laser serial number label in the [K=□] field.

(8) Enter the value "b" on the laser serial number label in the [Scanner Video Clk] field.

(9) Click the [OK] button. The adjusted value of the laser unit is written to the machine.

(10) Turn OFF the power switch of the machine.

1.5 Acquiring White Level Data

(1) Press the [5] button twice in the initial state of maintenance mode. "Press START" is displayed on the LCD.

(2) Press the [Start] button. "SCANNER AREA SET" is displayed on the LCD. The compensation value for the white level data/scanning width is stored in the EEPROM, and the machine returns to the initial state of maintenance mode.

1.6 Adjusting Touch Panel (Touch Panel Models Only)

(1) Press the [6] and [1] buttons in this order in the initial state of maintenance mode. The touch panel adjustment screen appears on the LCD.

(2) Use a touch panel stylus and touch the mark in the upper left corner of the screen. When the touched mark has disappeared, touch the next mark.
Touching sequence: upper left, lower left, lower right, upper right and center

(3) When the center (5th mark) is touched, [OK] is displayed if the specified area was adjusted correctly, and the machine returns to the initial state of maintenance mode.

(4) Turn OFF the power switch of the machine.

2. IF YOU REPLACE THE LASER UNIT

<What to do after replacement>

- Entering adjusted value of laser unit

■ What you need to prepare

(1) One USB cable

(2) Create a temporary folder on the C drive of the computer (Windows® XP or higher).

(3) Service setting tool (BrUsbn.zip)
Copy this file into the temporary folder created on the C drive. Extract the copied file and double-click "BrUsbsn.exe" to start it.

(4) Download utility (FILEDG32.EXE)
Copy this file into the temporary folder created on the C drive.

(5) Maintenance driver (MaintenanceDriver.zip)
When the maintenance driver is not installed, copy this file into the temporary folder created on the C drive, and extract the copied file. Refer to "APPENDIX 3 INSTALLING MAINTENANCE DRIVER" for the installation procedure.

Note:

- After replacing the laser unit, attach the laser serial number label of the new laser unit on the laser plate.
- Enter the number printed on the laser serial number label of the new laser unit when entering the adjusted value of the laser unit.

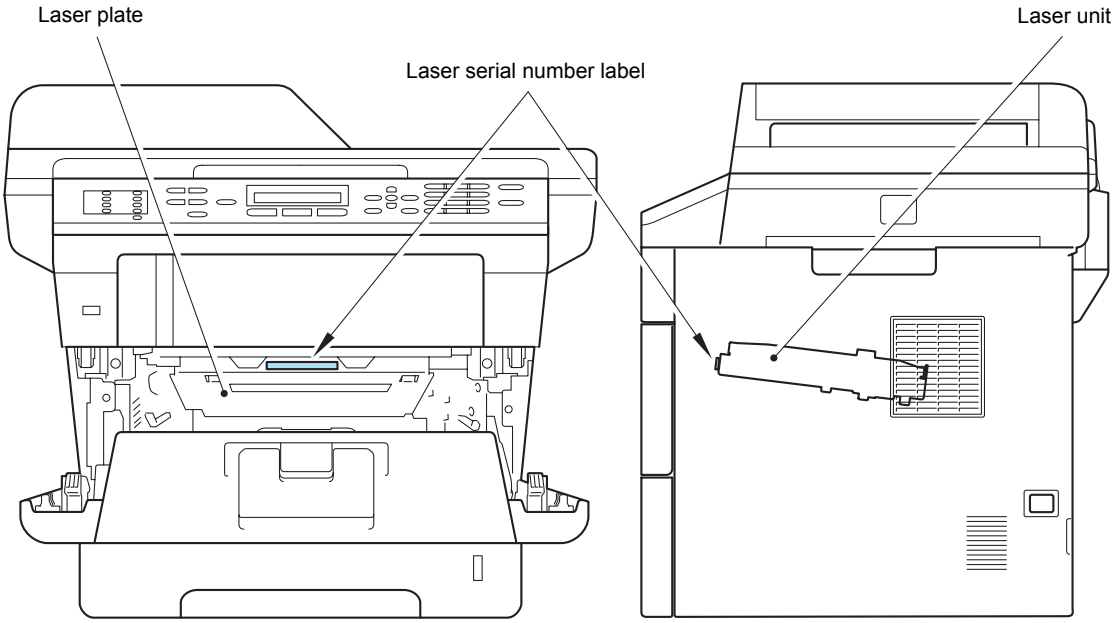

Fig. 4-2

2.1 Entering Adjusted Value of Laser Unit

(1) Enter maintenance mode.

(2) Connect the computer to the machine with the USB cable.

(3) Double-click the "BrUsbsn.exe" file that was copied to the temporary folder to start it.

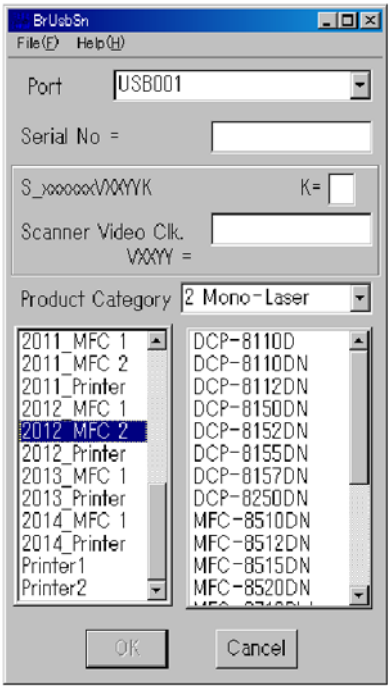

(4) Click "2012_MFC 2".

(5) In the [Port] field, select the port number assigned to the Brother Maintenance USB Printer. If the port number is unknown, follow the steps below to check it.

1) Click [Start], [Settings], and [Printers and Faxes]. The Printers and Faxes window appears.

2) Right-click the Brother Maintenance USB Printer icon.

3) Click [Properties]. The Brother Maintenance USB Printer Properties window appears.

4) Click the [Ports] tab. The Brother Maintenance USB Printer port number is displayed.

(6) Check the number on the laser serial number label attached to the location shown in the illustration below.

ex.) SM9922021234567_55450B

a

b

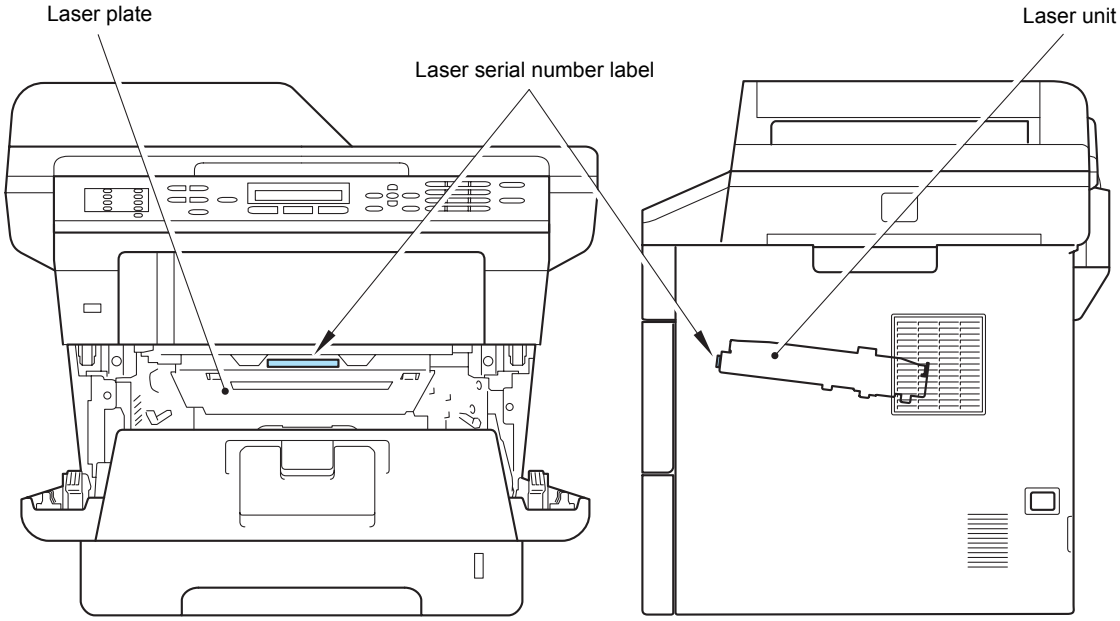

Fig. 4-3

(7) Enter the value "a" on the laser serial number label in the [K=□] field.

(8) Enter the value "b" on the laser serial number label in the [Scanner Video Clk] field.

(9) Click the [OK] button. The adjusted value of the laser unit is written to the machine.

(10) Turn OFF the power switch of the machine.

3. IF YOU REPLACE THE LOW-VOLTAGE POWER SUPPLY PCB ASSY

<What to do after replacement>

- Resetting irregular power supply detection counter

■ What you need to prepare

(1) One USB cable

(2) Create a temporary folder on the C drive of the computer (Windows® XP or higher).

(3) Download utility (FILEDG32.EXE)
Copy this file into the temporary folder created on the C drive.

(4) Maintenance driver (MaintenanceDriver.zip)
When the maintenance driver is not installed, copy this file into the temporary folder created on the C drive, and extract the copied file. Refer to "APPENDIX 3 INSTALLING MAINTENANCE DRIVER" for the installation procedure.

(5) Irregular power supply detection counter PJL file (SQWAVE.PJL)

3.1 Resetting Irregular Power Supply Detection Counter

The irregular power supply detection counter increases by one when the machine detects irregular power supply. When the counter reaches the limit and the irregular power supply detection error is displayed, replace the low-voltage power supply PCB ASSY, which may have been damaged by repeated irregular power supply, and reset the irregular power supply detection counter. In this case, if the same power supply is used, the same error may occur even when the low-voltage power supply PCB ASSY is replaced. Ask the user to review the installation environment.

(1) Enter maintenance mode.

(2) Connect the computer to the machine with the USB cable.

(3) Double-click "FILEDG32.EXE" on the computer to start it, and select the "Brother Maintenance USB Printer".

(4) Drag and drop the "SQWAVE.PJL" file onto the "Brother Maintenance USB Printer" icon.

(5) Turn OFF the power switch of the machine.

4. IF YOU REPLACE THE HIGH-VOLTAGE POWER SUPPLY PCB ASSY

<What to do after replacement>

- After replacement, the new high-voltage power supply PCB ASSY is no longer compatible with the main PCB ASSY. Therefore, initialize the pre-discharge detection parameters.

■ What you need to prepare

(1) One USB cable

(2) Create a temporary folder on the C drive of the computer (Windows® XP or higher).

(3) Download utility (FILEDG32.EXE)
Copy this file into the temporary folder created on the C drive.

(4) Maintenance driver (MaintenanceDriver.zip)
When the maintenance driver is not installed, copy this file into the temporary folder created on the C drive, and extract the copied file. Refer to "APPENDIX 3 INSTALLING MAINTENANCE DRIVER" for the installation procedure.

(5) Pre-discharge detection parameter initialization pjl file
PREDISCHAGESET_RESET.pjl

4.1 Initializing Pre-discharge Detection Parameters

(1) Enter maintenance mode.

(2) Connect the computer to the machine with the USB cable.

(3) Double-click "FILEDG32.EXE" on the computer to start it, and select the "Brother Maintenance USB Printer".

(4) Drag and drop the "PREDISCHAGESET_RESET.pjl" file onto the "Brother Maintenance USB Printer" icon.

(5) Turn OFF the power switch of the machine.

5. IF YOU REPLACE ANY PERIODIC REPLACEMENT PARTS

<What to do after replacement>

- Resetting counters for periodic replacement parts

(1) While the machine is in the ready state, press the [3] and [9] buttons simultaneously. "Parts Replacement/Reset-Laser Unit" is displayed on the LCD.

(2) Press the [▲] or [▼] button to display the part for which the counter is to be reset, and press the [Start] button.
The counters for the following parts must be reset after these parts are replaced:
- Drum
- PF Kit MP
- PF Kit 1
- PF Kit 2
- Fuser
- Laser

When resetting the counter for the laser unit, for example, "Laser Unit OK?" is displayed on the LCD.

(3) Press the [Start] button. The corresponding counter is reset, and the machine returns to the initial state of maintenance mode.

(4) Turn OFF the power switch of the machine.

6. IF YOU REPLACE THE CONTROL PANEL ASSY OR TOUCH PANEL ASSY

<What to do after replacement>

- Installing panel firmware (touch panel models only)
- Adjusting touch panel (touch panel models only)
- Checking LCD operation
- Checking control panel operation

■ What you need to prepare

(1) One USB cable

(2) Create a temporary folder on the C drive of the computer (Windows® XP or higher).

(3) Service setting tool (BrUsbn.zip)
Copy this file into the temporary folder created on the C drive. Extract the copied file and double-click "BrUsbsn.exe" to start it.

(4) Download utility (FILEDG32.EXE)
Copy this file into the temporary folder created on the C drive.

(5) Maintenance driver (MaintenanceDriver.zip)
When the maintenance driver is not installed, copy this file into the temporary folder created on the C drive, and extract the copied file. Refer to "APPENDIX 3 INSTALLING MAINTENANCE DRIVER" for the installation procedure.

(6) Firmware

Panel firmware (Touch panel models only)	(E.g.) LZXXXX_$.upd (firmware installation using PC) (E.g.) LZXXXX_$.djf (firmware installation using USB flash memory)
LZXXXX: First six digits of the part number of the firmware $: Alphabetic character representing the revision version of the firmware (Touch panel models only)	

(7) USB flash memory

6.1 Installing Firmware (Touch Panel Models Only)

6.1.1 Checking firmware version

Check that the panel firmware is the latest version. If it is the latest version, there is no need to install the panel firmware. If it is not, be sure to install the firmware to the main PCB as described in "6.1 Installing Firmware (Touch Panel Models Only)".

<How to check firmware version>

While the machine is in the ready state, press the [*] and [#] buttons simultaneously. The firmware version information is displayed on the LCD.

6.1.2 Installing firmware using USB flash memory

Save the program file on the USB flash memory, and connect it to the machine directly to install the firmware.

Note:

- Installing the firmware using a USB flash memory is not possible in deep sleep mode. Press the [Start] button to quit deep sleep mode.
- Check that the there is sufficient free space on the USB flash memory before saving the program file on the USB flash memory.
- When installing the firmware using a USB flash memory fails during the procedure and an error is displayed on the LCD or no characters are displayed on the LCD, change to firmware installation using a PC.
- When the main firmware installed is the latest version and the panel firmware installed is not the latest version, error code 0F00 is displayed on the LCD, and firmware installation using a USB flash memory becomes inoperable. In this case, refer to "6.1.3 Installing firmware using PC" in this chapter to install the panel firmware.

(1) Save the program files required for firmware installation (e.g. LZXXXX_$.djf) on the USB flash memory.

(2) While the machine is in the ready state, insert the USB flash memory into the USB memory port on the front of the machine.

(3) When the machine recognizes the USB flash memory, names of the files saved are displayed. Press the [▲] or [▼] button to select the panel firmware file, and press the [OK] button.

(4) When "Program update/Press start" is displayed on the LCD, press the [OK] or [Start] button. The print data lamp flashes with "Program Updating/Do not turn off" displayed, and installation starts. Do not turn off the power switch of the machine.

(5) When installation is completed, the machine restarts automatically.

(6) When the panel firmware has been installed, remove the USB flash memory from the USB memory port.

6.1.3 Installing firmware using PC

(1) Press and hold the [5] button and turn ON the power switch of the machine.
"▮▮▮▮▮▮▮▮" is displayed on the LCD, and firmware installation mode is entered.

(2) Connect the computer to the machine with the USB cable.

(3) Turn ON the power switch of the computer.

(4) Open the temporary folder and double-click "FILEDG32.EXE" to start it, and select the "Brother Maintenance USB Printer."

(5) Drag and drop the panel firmware (LZXXXX_$_upd) in the same folder onto the "Brother Maintenance USB Printer" icon. The panel firmware file is loaded to the machine, and installing to the flash ROM starts.

(6) Vertical stripes flash alternately on the LCD during installation. When installation is completed, the machine restarts and returns to the ready state automatically.
Do not disconnect the USB cable or turn OFF the power switch of the computer until installation is completed.

(7) Turn OFF the power switch of the machine, and disconnect the USB cable.

6.2 Adjusting Touch Panel (Touch Panel Models Only)

(1) Enter maintenance mode, and press the [6] and [1] buttons in this order. The touch panel adjustment screen appears on the LCD.

(2) Use a touch panel stylus and touch the mark in the upper left corner of the screen. When the touched mark has disappeared, touch the next mark.
Touching sequence: upper left, lower left, lower right, upper right and center

(3) When the center (5th mark) is touched, [OK] is displayed if the specified area was adjusted correctly, and the machine returns to the initial state of maintenance mode.

(4) Turn OFF the power switch of the machine.

6.3 Checking LCD Operation

(1) Press the [1] and [2] buttons in this order in the initial state of maintenance mode. The LCD check display appears.
Refer to "1.3.7 Check LCD operation (function code: 12)" in Chapter 5 for the display.

(2) The LCD display changes each time the [Start] button is pressed.

(3) After confirming there are no problems on the LCD display, press the [Stop/Exit] button, and the machine returns to the initial state of maintenance mode.

6.4 Checking Control Panel Operation

(1) Press the [1] and [3] buttons in this order in the initial state of maintenance mode. "00" is displayed on the LCD.

(2) Press the buttons on the control panel according to the numbers provided on the figure in "1.3.8 Check control panel button operation (function code: 13)" in Chapter 5.

(3) When button operation is normal, the machine returns to the initial state of maintenance mode when the last button is pressed. To cancel operation and return to the initial state of maintenance mode, press the [Stop/Exit] button.

(4) Press the [9] button twice to return the machine to the ready state.

7. IF YOU REPLACE THE DOCUMENT SCANNER UNIT, ADF UNIT (DUPLEX SCANNING MODEL), OR CIS UNIT

<What to do after replacement>

- Acquiring white level data (function code: 55)

7.1 Acquiring White Level Data (function code: 55)

(1) Enter maintenance mode, and press the [5] button twice. "Press START" is displayed on the LCD.

(2) Press the [Start] button. "SCANNER AREA SET" is displayed on the LCD, and the white level data is acquired.

(3) After several seconds, the compensation value for the white level data/scanning width is stored in the EEPROM, and the machine returns to the initial state of maintenance mode. Press the [9] button twice to return the machine to the ready state.

CHAPTER 5
SERVICE FUNCTIONS

CHAPTER 5 SERVICE FUNCTIONS

Describes the maintenance mode which is exclusively designed for the purpose of checking the settings and adjustments using the buttons on the control panel. This chapter also covers not-disclosed-to-users function menus, which activate settings and functions or reset the parts life.

CONTENTS

1. MAINTENANCE MODE 5-1

1.1 How to Enter Maintenance Mode 5-1

1.1.1 Method of entering end-user accessible maintenance mode 5-1

1.1.2 Method of entering maintenance mode for service personnel 5-1

1.2 List of Maintenance Mode Functions 5-2

1.3 Details of Maintenance Mode Functions 5-3

1.3.1 Initialize EEPROM parameters (function code: 01, 91) 5-3

1.3.2 Print white level/black level data for document scanning compensation (function code: 05) 5-4

1.3.3 Move CIS unit to transportation position (function code: 06) 5-6

1.3.4 ADF performance test (function code: 08) 5-6

1.3.5 Print test pattern (function code: 09) 5-7

1.3.6 Set worker switches (WSW) and print worker switch setting data (function code: 10, 11) 5-8

1.3.7 Check LCD operation (function code: 12) 5-12

1.3.8 Check control panel button operation (function code: 13) 5-13

1.3.9 Display software version (function code: 25) 5-15

1.3.10 Check sensor operation (function code: 32) 5-16

1.3.11 Display LAN connection status (function code: 33) 5-18

1.3.12 Set PC print functions (function code: 43) 5-19

1.3.13 Change USB No. return value / Adjust left-end print start position on second side when duplex printing / Change ON/OFF setting for Deep Sleep function (function code: 45) 5-22

1.3.14 Set country/language (function code: 52) 5-24

1.3.15 Transfer received fax data/log information (function code: 53) 5-25

1.3.16 Fine-tune scanning position (function code: 54) 5-27

1.3.17 Acquire white level data and set CIS scan area (function code: 55) 5-27

1.3.18 Adjust touch panel (function code: 61) 5-28

1.3.19 Continuous print test (function code: 67) 5-29

1.3.20 Print frame pattern (single-side printing) (function code: 69) 5-31

1.3.21 Print frame pattern (duplex printing) (function code: 70) 5-33

1.3.22 Print solid pattern (function code: 71) 5-34

1.3.23 Setting by country (function code: 74) 5-35

1.3.24 Print maintenance information (function code: 77) 5-38

1.3.25 Check fan operation (function code: 78) 5-40
1.3.26 Display machine log information (function code: 80)..... 5-41
1.3.27 Display machine error code (function code: 82)..... 5-44
1.3.28 Send communication log information to telephone line (function code: 87)..... 5-44
1.3.29 Reset counters for periodic replacement parts (function code: 88)..... 5-44
1.3.30 Quit maintenance mode (function code: 99) 5-45
2. OTHER SERVICE FUNCTIONS 5-46
2.1 Change ON/OFF Setting for Deep Sleep Mode 5-46
2.2 Reset Periodic Replacement Parts..... 5-47
2.3 Reset Developer Roller Counter..... 5-48
2.4 Display ROM Version 5-49
2.5 Perform Demo Printing..... 5-49

1. MAINTENANCE MODE

Maintenance mode is exclusively designed for checking, setting and adjusting the machine using the buttons on the control panel.

Using maintenance mode functions, you can conduct operational checks of sensors or test printing, display the log information or error codes, and change the worker switches (WSW) etc.

1.1 How to Enter Maintenance Mode

1.1.1 Method of entering end-user accessible maintenance mode

Basically, the maintenance mode functions should only be accessed by service personnel. However, end users are allowed to use some of these functions under the guidance of service personnel over the phone. End users can only use the functions shaded in the table on the on page 5-2 (function codes 06, 09, 10, 11, 12, 25, 43, 45, 52, 53, 54, 61, 77, 80, 82, 87, 88 and 91).

<Operating Procedure>

Non touch panel models

(1) While the machine is in the ready state, press the [Menu], [Start], and [Menu] buttons in this order.
"0" is displayed on the LCD.

(2) Use the keypad to enter the maintenance mode function code to be executed.

(3) Each time the selected maintenance mode function is completed, the machine returns to the ready state automatically.

Touch panel models

(1) While the machine is in the ready state, press the [Menu], [Start], and [0] buttons in this order.
"0" is displayed on the LCD.

(2) Use the keypad to enter the maintenance mode function code to be executed.

(3) Each time the selected maintenance mode function is completed, the machine returns to the ready state automatically.

1.1.2 Method of entering maintenance mode for service personnel

<Operating Procedure>

Non touch panel models

(1) While the machine is in the ready state, press the [Menu] and [Start] buttons in this order. Then, press the [▲] button four times to enter maintenance mode.

(2) "▮▮ MAINTENANCE ▮▮▮" is displayed on the LCD to indicate that the machine has moved into the initial state of maintenance mode. The machine is ready to accept entry via the buttons.

(3) To select any of the maintenance mode functions shown in the list on the next page, use the keypad to enter the maintenance mode function code to be executed.

Touch panel models

(1) While the machine is in the ready state, press the [Menu] and [*] buttons in this order. Then, press the [2], [8], [6], and [4] buttons in this order to enter maintenance mode.

(2) "▮▮ MAINTENANCE ▮▮▮" is displayed on the LCD to indicate that the machine has moved into the initial state of maintenance mode. The machine is ready to accept entry via the buttons.

(3) To select any of the maintenance mode functions shown in the list on the next page, use the keypad to enter the maintenance mode function code to be executed.

1.2 List of Maintenance Mode Functions

Function code	Function	Refer to:
01	Initialize EEPROM parameters	1.3.1 (5-3)
05	Print white level/black level data for document scanning compensation	1.3.2 (5-4)
06	Move CIS unit to transportation position	1.3.3 (5-6)
08	ADF performance test	1.3.4 (5-6)
09	Print test pattern	1.3.5 (5-7)
10	Set worker switches (WSW)	1.3.6 [1] (5-8)
11	Print worker switch (WSW) setting data	1.3.6 [2] (5-11)
12	Check LCD operation	1.3.7 (5-12)
13	Check control panel button operation	1.3.8 (5-13)
25	Display software version	1.3.9 (5-15)
32	Check sensor operation	1.3.10 (5-16)
33	Display LAN connection status	1.3.11 (5-18)
43	Set PC print functions	1.3.12 (5-19)
45	Change USB No. return value / Adjust left-end print start position on second side when duplex printing / Change ON/OFF setting for Deep Sleep function	1.3.13 (5-22)
52	Set country / language	1.3.14 (5-24)
53	Transfer received fax data/log information	1.3.15 (5-25)
54	Fine-tune scanning position	1.3.16 (5-27)
55	Acquire white level data and set CIS scan area	1.3.17 (5-27)
61	Adjust touch panel	1.3.18 (5-28)
67	Continuous print test	1.3.19 (5-29)
69	Print frame pattern (single-side printing)	1.3.20 (5-31)
70	Print frame pattern (duplex printing)	1.3.21 (5-33)
71	Print solid pattern	1.3.22 (5-34)
74	Setting by country	1.3.23 (5-35)
77	Print maintenance information	1.3.24 (5-38)
78	Check fan operation	1.3.25 (5-40)
80	Display machine log information	1.3.26 (5-41)
82	Display machine error code	1.3.27 (5-44)
87	Send communication log information to telephone line	1.3.28 (5-44)
88	Reset counters for periodic replacement parts	1.3.29 (5-44)
91	Initialize EEPROM parameters	1.3.1 (5-3)
99	Quit maintenance mode	1.3.30 (5-45)

The maintenance mode functions shaded in the table can be used by end users.

1.3 Details of Maintenance Mode Functions

1.3.1 Initialize EEPROM parameters (function code: 01, 91)

<Function>

This function is used to initialize the setting values for operation parameters, user switches, and worker switches (WSW) registered in the EEPROM. Entering function code 01 initializes most EEPROM areas. Entering function code 91 initializes only the specified areas as shown in the table below.

<table>
<tr><th>Function code
Data item</th><th>01</th><th>91</th></tr>
<tr><td>Printer switch (counter information)</td><td rowspan="3">Areas not to be initialized</td><td rowspan="6">Areas not to be initialized</td></tr>
<tr><td>Error history</td></tr>
<tr><td>MAC address</td></tr>
<tr><td>Password for control panel operation lock</td><td rowspan="9">Areas to be initialized</td></tr>
<tr><td>Secure function lock</td></tr>
<tr><td>Telephone function registration
Telephone directory</td></tr>
<tr><td>Worker switches</td><td rowspan="6">Areas to be initialized</td></tr>
<tr><td>User switches (items initialized when "Factory Reset" is executed)</td></tr>
<tr><td>Function settings except user switches (settings not subject to "Factory Reset")</td></tr>
<tr><td>LAN setting</td></tr>
<tr><td>Emulation setting</td></tr>
</table>

<Operation Procedure>

(1) Press the [0] and [1] buttons in this order in the initial state of maintenance mode to display "Maintenance 01" (or press the [9] and [1] buttons as appropriate to display "Maintenance 91") on the LCD.

(2) Press the [OK] button. "PARAMETER INIT" is displayed on the LCD.

(3) When initializing parameters is completed, the machine returns to the initial state of maintenance mode.

1.3.2 Print white level/black level data for document scanning compensation (function code: 05)

<Function>

This function is used to print the contrast level data for document scanning compensation.

<Operation Procedure>

Note:

- Be sure not to perform this operation procedure immediately after the power is turned ON, but after performing the document scanning operation at least once. The machine initializes the contrast level data and obtains the standard value for document scanning compensation at the start of scanning the document. Therefore, if this function is used without performing a document scanning operation, the correct contrast level data cannot be printed even though the function code 05 is excuted.
  The print result varies depending on whether color scanning or monochrome scanning is performed immediately before this operation procedure. Check the contrast level data you want to print and then implement the procedure below.

(1) For monochrome scanning, make a monochrome copy of the document. For color scanning, scan the document in color mode.

(2) Press the [0] and [5] buttons in this order in the initial state of maintenance mode.
"1. FRONT 2. BACK?" is displayed on the LCD.

(3) Press the [1] or [2] button. "PRINTING" is displayed on the LCD, and the contrast level data for document scanning compensation is printed.
When there is no paper in the paper tray, printing is cancelled.
When printing is completed, the machine returns to the initial state of maintenance mode.

■ **Data to be printed (common to monochrome/color)**

a)	LED CURRENT DATA	1 byte
b)	LED pulse data 1 (UP) (G)	2 bytes
c)	LED pulse data 1 (DOWN) (G)	2 bytes
d)	LED pulse data 1 (UP) (B)	2 bytes
e)	LED pulse data 1 (DOWN) (B)	2 bytes
f)	LED pulse data 1 (UP) (R)	2 bytes
g)	LED pulse data 1 (DOWN) (R)	2 bytes
h)	LED pulse data 2 (UP) (G)	2 bytes
i)	LED pulse data 2 (DOWN) (G)	2 bytes
j)	LED pulse data 2 (UP) (B)	2 bytes
k)	LED pulse data 2 (DOWN) (B)	2 bytes
l)	LED pulse data 2 (UP) (R)	2 bytes
m)	LED pulse data 2 (DOWN) (R)	2 bytes
n)	RLCV (AFE Parameter)	1 byte
o)	OFFSET (AFE Parameter)	1 byte
p)	GAIN (AFE Parameter)	2 bytes
q)	Background color compensation data	1 byte
r)	HP detection black compensation data	2 bytes x 5
s)	Black level data	Based on previous scanning pixel count
t)	White level data (G)	Based on previous scanning pixel count
u)	White level data (B)	Based on previous scanning pixel count
v)	White level data (R)	Based on previous scanning pixel count

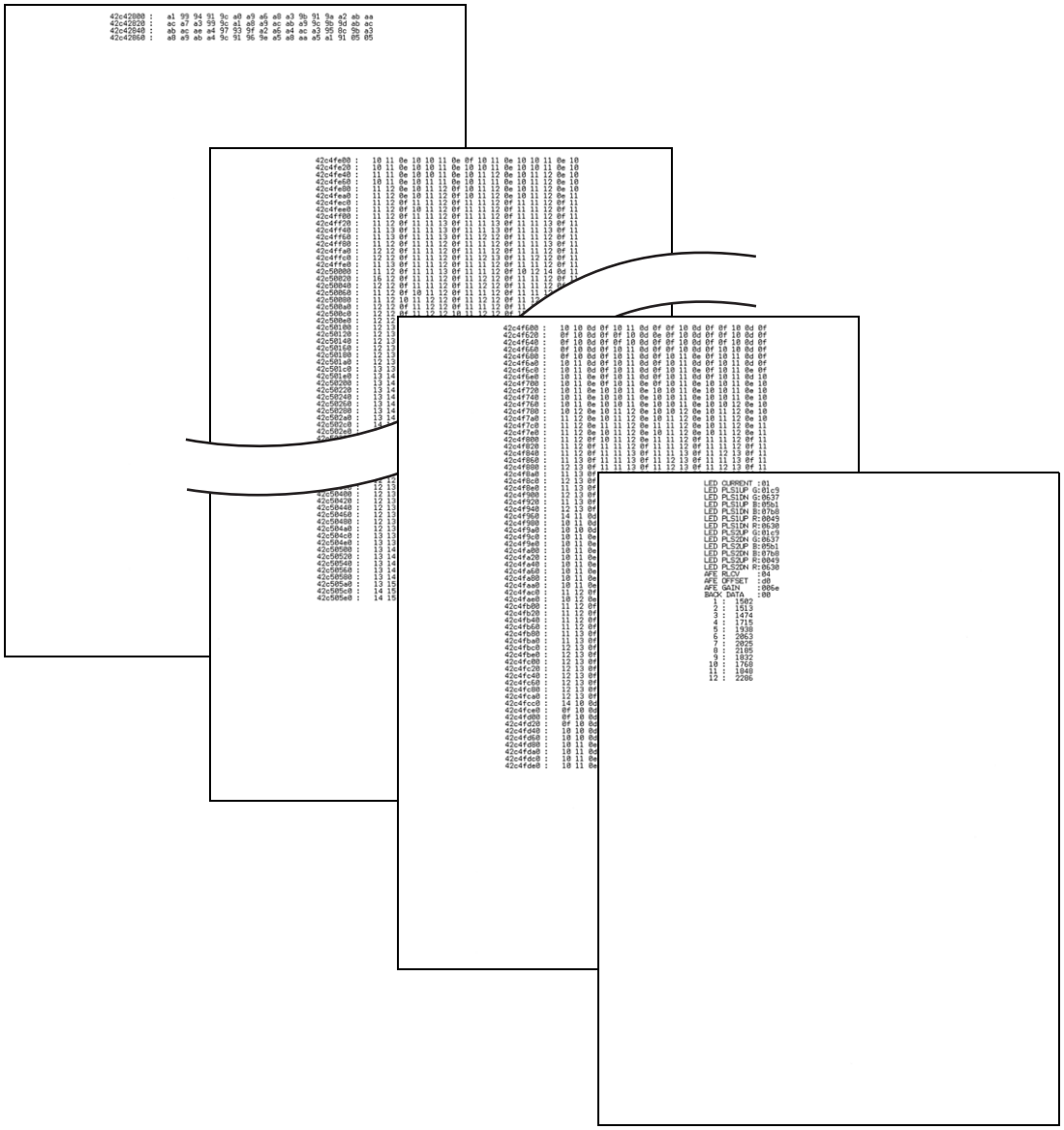

Fig. 5-1

Confidential

1.3.3 Move CIS unit to transportation position (function code: 06)

<Function>

This function is used to move the CIS unit of the document scanner unit to the transportation position (left end) immediately before packing and shipping the machine after repair and operation check. (This does not apply to the CIS unit of the ADF unit.)

Note:

- Please instruct end users to use this function wherever possible before packing and shipping their machine to a sales agent or a service dealer for repair.
  (For the procedure for end users to operate the maintenance mode, refer to "1.1.1 Method of entering end-user accessible maintenance mode" in this chapter.)

<Operation Procedure>

(1) Press the [0] and [6] buttons in this order in the initial state of maintenance mode.
"Maintenance 06" is displayed on the LCD, and the CIS unit moves to the transportation position.

(2) When moving is completed, "SCAN LOCKED" is displayed on the LCD.

(3) When the [Stop/Exit] button is pressed, the machine returns to the initial state of maintenance mode.
In the event that the CIS unit was unable to move to the transportation position or this function code was executed while a scanning error was current, an error occurs and "SCAN LOCK ERROR" is displayed on the LCD.

1.3.4 ADF performance test (function code: 08)

<Function>

This function is used to test the performance of the automatic document feeder (ADF). The scanned pages of the documents fed by the ADF are counted and the result is displayed on the LCD.

<Operation Procedure>

(1) Set the documents in the ADF unit. "DOC. READY" is displayed on the LCD.

(2) Press the [0] and [8] buttons in this order in the initial state of maintenance mode.
"ADF CHECK P.**" is displayed on the LCD, and the documents are ejected while the scanned pages are counted.
(** indicates the current count of the scanned pages.)
(For duplex scanning models, as two faces per sheet are scanned, the value increases by two each time a sheet is ejected.)

(3) When the [Stop/Exit] button is pressed, the machine returns to the initial state of maintenance mode.

1.3.5 Print test pattern (function code: 09)

<Function>

This function is used to print a test pattern (print quality check sheet) to check any missing image and print quality.

<Operation Procedure>

(1) Press the [0] and [9] buttons in this order in the initial state of maintenance mode.
"Maintenance 09" is displayed on the LCD, and the test pattern is printed.
When there is no paper in the paper tray, printing is cancelled.

(2) When printing of the test pattern is completed, the machine returns to the initial state of maintenance mode.

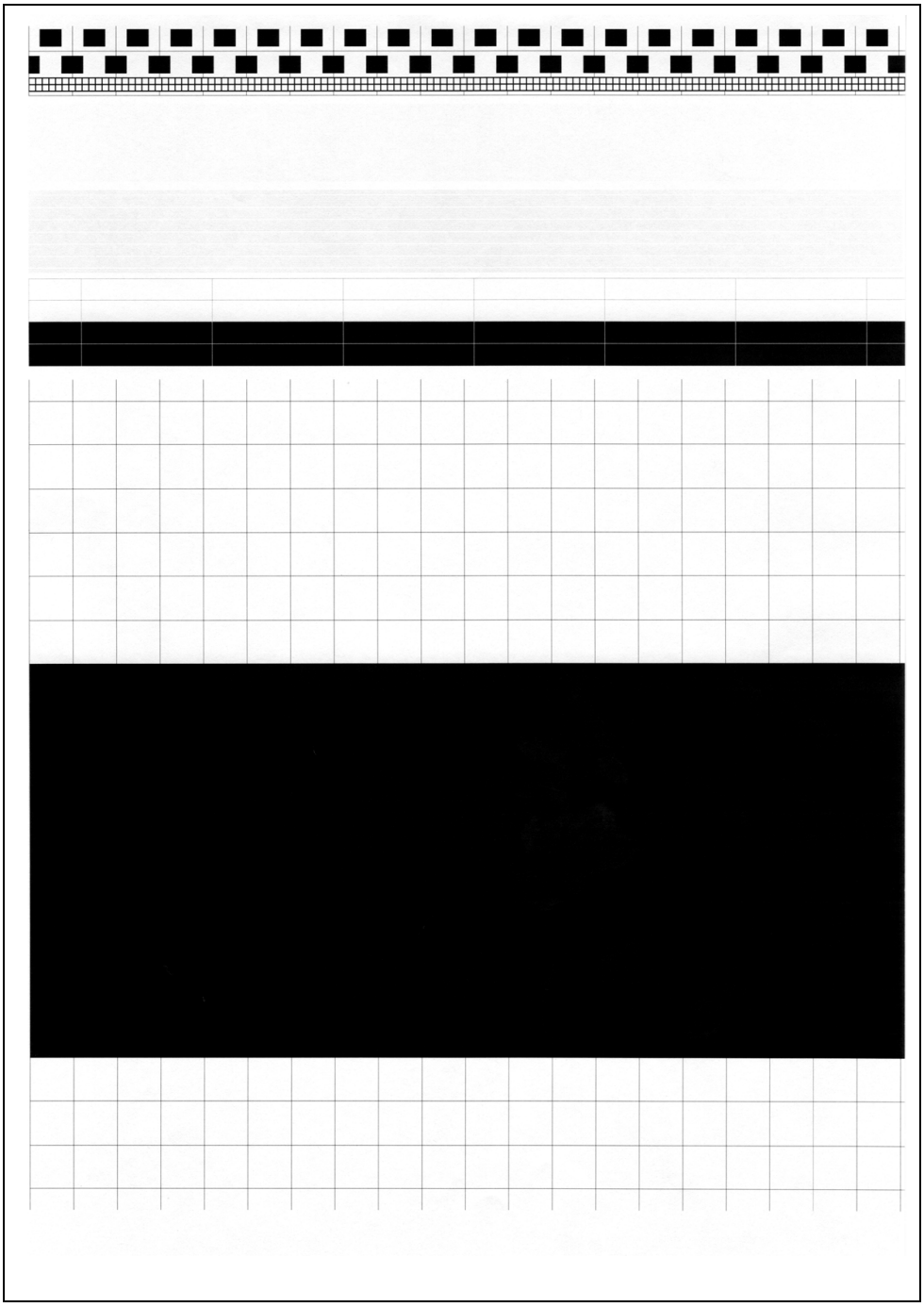

Fig. 5-2

Confidential

1.3.6 Set worker switches (WSW) and print worker switch setting data (function code: 10, 11)

[1] Set worker switches (WSW) (function code: 10)

<Function>

The worker switches shown in the table below can be used to set the function to satisfy various requirements. The switch setting can be changed using the buttons on the control panel.

The worker switches are factory set to conform with the laws and regulations of the country the machine is shipped to. Do not change these settings unless necessary.

■ List of worker switches

WSW No.	Function
WSW01	Dial pulse setting
WSW02	Tone signal setting
WSW03	PABX mode setting
WSW04	Transfer facility setting
WSW05	1st dial tone and busy tone detection
WSW06	[Redial/Pulse] button setting and 2nd dial tone detection
WSW07	Dial tone setting 1
WSW08	Dial tone setting 2
WSW09	Protocol definition 1
WSW10	Protocol definition 2
WSW11	Busy tone setting
WSW12	Signal detection condition setting
WSW13	Modem setting
WSW14	AUTO ANS facility setting
WSW15	Redial facility setting
WSW16	Function setting 1
WSW17	Function setting 2
WSW18	Function setting 3
WSW19	Transmission speed setting
WSW20	Overseas communications mode setting
WSW21	TAD setting 1
WSW22	ECM and call waiting caller ID
WSW23	Communications setting
WSW24	TAD setting 2
WSW25	TAD setting 3
WSW26	Function setting 4
WSW27	Function setting 5
WSW28	Function setting 6
WSW29	Function setting 7
WSW30	Function setting 8
WSW31	Function setting 9
WSW32	Function setting 10
WSW33	Function setting 11
WSW34	Function setting 12

WSW No.	Function
WSW35	Function setting 13
WSW36	Function setting 14
WSW37	Function setting 15
WSW38	V.34 transmission settings
WSW39	V.34 transmission speed
WSW40	V.34 modem settings
WSW41	ON-duration of the scanning light source
WSW42	Internet mail settings
WSW43	Function setting 16
WSW44	Speeding up scanning-1
WSW45	Speeding up scanning-2
WSW46	Monitor of power ON/OFF state and parallel port kept at high
WSW47	Switching between high- and full-speed USB
WSW48	USB setup latency
WSW49	End-of-copying beep and print in black
WSW50	SDAA settings
WSW51	Function setting 17
WSW52	Function setting 18
WSW53	Function setting 19
WSW54	Function setting 20
WSW55	Interval of time required for the developing bias voltage correction
WSW56	Function setting 21
WSW57	Function setting 22
WSW58	Function setting 23
WSW59	Function setting 24
WSW60	Function setting 25
WSW61	Scanning light intensity to judge to be stable 1
WSW62	Scanning light intensity to judge to be stable 2
WSW63	Setting clock type / Demo print mode / Font support for Israel
WSW64	Setting the language / default paper size
WSW65	Setting the paper support
WSW66	Reserved (Change of the setting is prohibited)
WSW67	Reserved (Change of the setting is prohibited)
WSW68	Reserved (Change of the setting is prohibited)
WSW69	Reserved (Change of the setting is prohibited)
WSW70	Reserved (Change of the setting is prohibited)
WSW71	Reserved (Change of the setting is prohibited)
WSW72	Reserved (Change of the setting is prohibited)
WSW73	Reserved (Change of the setting is prohibited)
WSW74	ADF stop control
WSW75	Setting the document count method for duplex scanning
WSW76	Set the limit for the number of documents to be ejected in reverse order for simplex scanning
WSW77	Set the limit for the number of documents to be ejected in reverse order for duplex scanning from ADF
WSW78	Recording stop function when the drum reaches the end of life

Confidential

WSW No.	Function
WSW79	Function setting 27
WSW80	Copy speed adjustment
WSW81	Emulation function deletion
WSW82	AirPrint icon type setting

Refer to the separate manual for details of worker switches.

<Operation Procedure>

(1) Press the [1] and [0] buttons in this order in the initial state of maintenance mode. "WSW00" is displayed on the LCD.

(2) Enter the worker switch number that you want to change the setting. The display shown below appears on the LCD.

Selector No. 1 ↓ Selector No. 8 ↓

WSWXX = 0 0 0 0 0 0 0 0

(3) Press the [◀] or [▶] button to move the cursor to the desired selector, and change the setting by pressing the [1] or [0] button.

(4) When changing the setting is completed, press the [OK] button. The new selector setting value is stored in the EEPROM, and the LCD returns to the ready state for worker switch number entry ([WSW00]).

(5) When worker switch setting is completed, press the [Stop/Exit] button to return the machine to the initial state of maintenance mode.

Note:

- To cancel operation and return to the initial state of maintenance mode, press the [Stop/Exit] button.
- If there is no entry for one minute or longer on 2-digits firmware switch number selection, the machine returns to the initial state of maintenance mode automatically.

[2] Print worker switch (WSW) setting data (function code: 11)

<Function>

This function is used to print the setting items of the worker switches and the set details.

<Operation Procedure>

(1) Press the [1] button twice in the initial state of maintenance mode. "PRINTING" is displayed on the LCD and the Configuration List shown below is printed.
When there is no paper in the paper tray, printing is cancelled.

(2) When printing is completed, the machine returns to the initial state of maintenance mode.

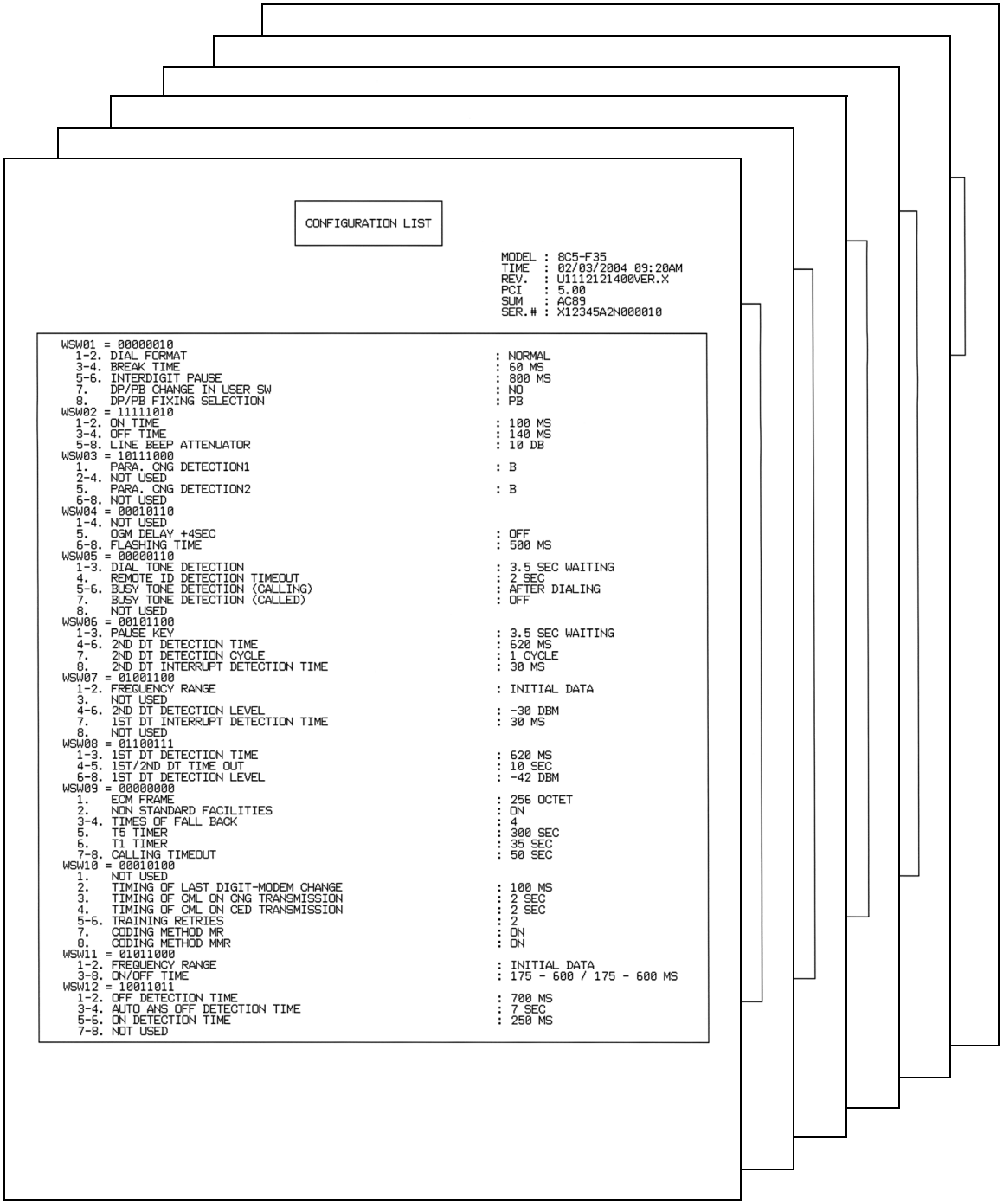

```
CONFIGURATION LIST

                                                    MODEL : 8C5-F35
                                                    TIME  : 02/03/2004 09:20AM
                                                    REV.  : U1112121400VER.X
                                                    PCI   : 5.00
                                                    SUM   : AC89
                                                    SER.# : X12345A2N000010

WSW01 = 00000010
  1-2. DIAL FORMAT                                  : NORMAL
  3-4. BREAK TIME                                   : 60 MS
  5-6. INTERDIGIT PAUSE                             : 800 MS
  7.   DP/PB CHANGE IN USER SW                      : NO
  8.   DP/PB FIXING SELECTION                       : PB
WSW02 = 11111010
  1-2. ON TIME                                      : 100 MS
  3-4. OFF TIME                                     : 140 MS
  5-8. LINE BEEP ATTENUATOR                         : 10 DB
WSW03 = 10111000
  1.   PARA. CNG DETECTION1                         : B
  2-4. NOT USED
  5.   PARA. CNG DETECTION2                         : B
  6-8. NOT USED
WSW04 = 00010110
  1-4. NOT USED
  5.   OGM DELAY +4SEC                              : OFF
  6-8. FLASHING TIME                                : 500 MS
WSW05 = 00000110
  1-3. DIAL TONE DETECTION                          : 3.5 SEC WAITING
  4.   REMOTE ID DETECTION TIMEOUT                  : 2 SEC
  5-6. BUSY TONE DETECTION (CALLING)                : AFTER DIALING
  7.   BUSY TONE DETECTION (CALLED)                 : OFF
  8.   NOT USED
WSW06 = 00101100
  1-3. PAUSE KEY                                    : 3.5 SEC WAITING
  4-6. 2ND DT DETECTION TIME                        : 620 MS
  7.   2ND DT DETECTION CYCLE                       : 1 CYCLE
  8.   2ND DT INTERRUPT DETECTION TIME              : 30 MS
WSW07 = 01001100
  1-2. FREQUENCY RANGE                              : INITIAL DATA
  3.   NOT USED
  4-6. 2ND DT DETECTION LEVEL                       : -30 DBM
  7.   1ST DT INTERRUPT DETECTION TIME              : 30 MS
  8.   NOT USED
WSW08 = 01100111
  1-3. 1ST DT DETECTION TIME                        : 620 MS
  4-5. 1ST/2ND DT TIME OUT                          : 10 SEC
  6-8. 1ST DT DETECTION LEVEL                       : -42 DBM
WSW09 = 00000000
  1.   ECM FRAME                                    : 256 OCTET
  2.   NON STANDARD FACILITIES                      : ON
  3-4. TIMES OF FALL BACK                           : 4
  5.   T5 TIMER                                     : 300 SEC
  6.   T1 TIMER                                     : 35 SEC
  7-8. CALLING TIMEOUT                              : 50 SEC
WSW10 = 00010100
  1.   NOT USED
  2.   TIMING OF LAST DIGIT-MODEM CHANGE            : 100 MS
  3.   TIMING OF CML ON CNG TRANSMISSION            : 2 SEC
  4.   TIMING OF CML ON CED TRANSMISSION            : 2 SEC
  5-6. TRAINING RETRIES                             : 2
  7.   CODING METHOD MR                             : ON
  8.   CODING METHOD MMR                            : ON
WSW11 = 01011000
  1-2. FREQUENCY RANGE                              : INITIAL DATA
  3-8. ON/OFF TIME                                  : 175 - 600 / 175 - 600 MS
WSW12 = 10011011
  1-2. OFF DETECTION TIME                           : 700 MS
  3-4. AUTO ANS OFF DETECTION TIME                  : 7 SEC
  5-6. ON DETECTION TIME                            : 250 MS
  7-8. NOT USED
```

Fig. 5-3

Confidential

1.3.7 Check LCD operation (function code: 12)

<Function>

This function is used to check that the LCD on the control panel is operating normally.

<Operation Procedure>

(1) Press the [1] and [2] buttons in this order in the initial state of maintenance mode. The LCD appears as in <Display 1> in the table below.

(2) Each press of the [Start] button cycles through the screens as shown in the table below.

(3) When the [Stop/Exit] button is pressed, the machine returns to the initial state of maintenance mode, regardless of the display status.

Non touch panel model	Touch panel model
<Display 1> Backlight : ON LCD: Complete black	<Display 1> Complete white
<Display 2> Backlight : ON LCD: Complete white	<Display 2> Complete black
<Display 3> Backlight : OFF LCD: Complete black	<Display 3> Complete red
<Display 4> Backlight : OFF LCD: Complete white	<Display 4> Complete green
	<Display 5> Complete blue
	<Display 6> Complete gray
	<Display 7> Stroke detection screen

Fig. 5-4

Confidential

1.3.8 Check control panel button operation (function code: 13)

<Function>

This function is used to check that the buttons on the control panel operate normally.

<Operation Procedure>

(1) Press the [1] and [3] buttons in this order in the initial state of maintenance mode. "00" is displayed on the LCD.

(2) Press the buttons on the control panel according to the numbers provided on the figure below. Each time the button is pressed, the corresponding figure is displayed on the LCD in decimal notation. Check that the number displayed on the LCD matches the number assigned to the button that has been pressed.
If the buttons are pressed in the incorrect order, "INVALID OPERATE" is displayed on the LCD. Press the [Stop/Exit] button, and then press the correct button.

(3) When button operation is normal, the machine returns to the initial state of maintenance mode when the last button is pressed.
To cancel operation and return to the initial state of maintenance mode, press the [Stop/Exit] button.

■ **DCP-8110D**

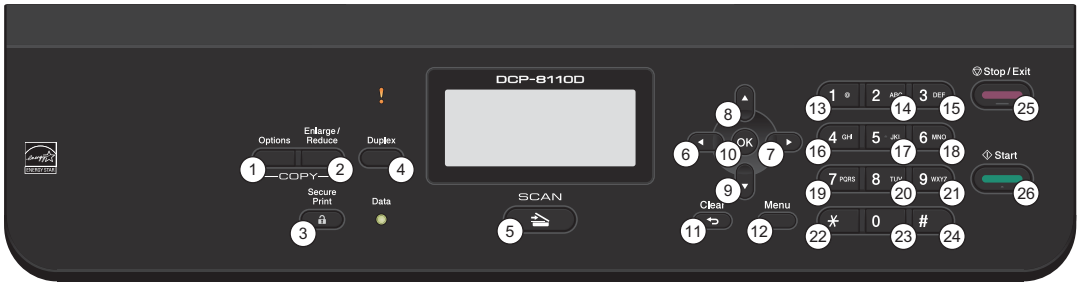

Fig. 5-5

■ **DCP-8110DN/8150DN/8152DN/8155DN/8157**

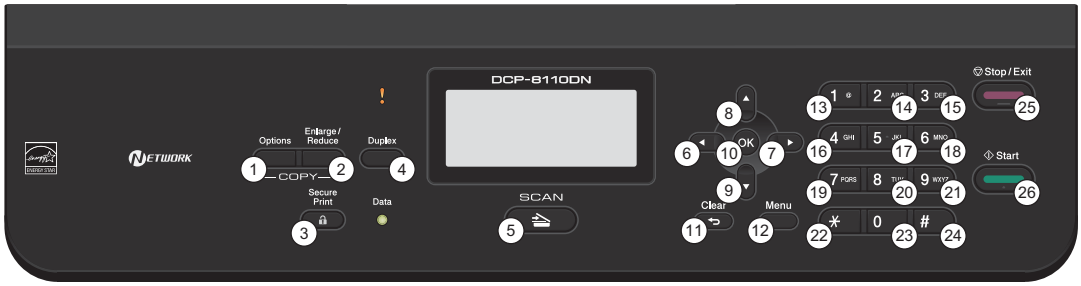

Fig. 5-6

■ **DCP-8250DN**

Fig. 5-7

■ MFC-8510DN/8512DN/8515DN/8520DN/8710DW/8712DW/8810DW/8910DW/8912DW

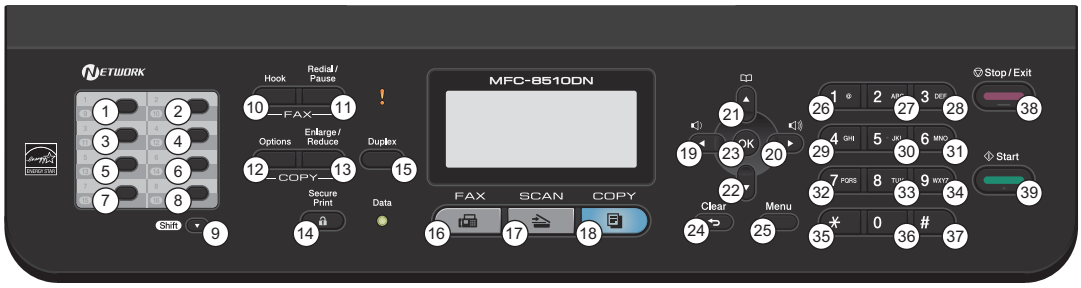

Fig. 5-8

■ MFC-8950DW/8950DWT/8952DW/8952DWT

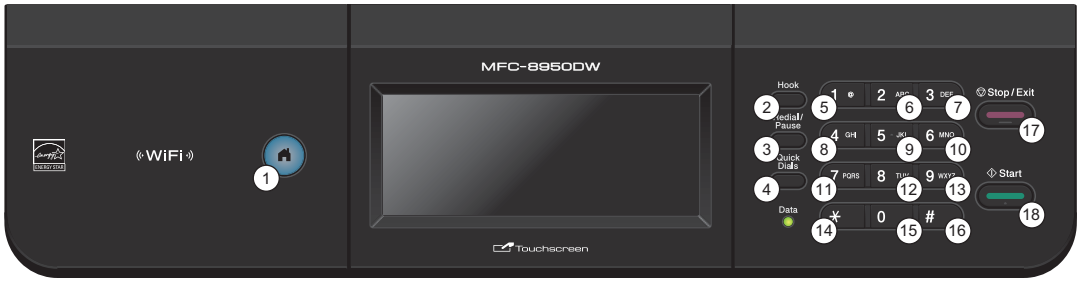

Fig. 5-9

Confidential

1.3.9 Display software version (function code: 25)

<Function>

This function is used to check the version information of the firmware or programs, or check sum information.

<Operation Procedure>

(1) Press the [2] and [5] buttons in this order in the initial state of maintenance mode. "TOTAL: Ver T" is displayed on the LCD.

(2) Pressing the [Start], [▲] or [▼] button changes the display item as shown in the table below.

(3) When the [Stop/Exit] button is pressed, the machine returns to the initial state of maintenance mode.

LCD	Description
TOTAL:Ver T *1	Main firmware version information
SUB1 :Ver1.00 (P) *1	Sub firmware version information ((P): Identifier for PCL/PS) *2
ENG :Ver1.00	Engine firmware version information
NET :Ver1.00	Network program version information (Displayed only for network-supported models)
PANEL :U08102319	Panel-CPU / Touch panel - Main firmware version information
PNL B:011080115	Panel boot firmware version information
i0801170900:0000	I-FAX version information
B1112312359:1234 *1	Boot program creation date
U1112312359:1234 *1	Main firmware creation date
D1112312359:1234	Demo firmware creation date
P1112312359:1234 *1	Sub firmware creation date
ROM Check Sum	Check sum self-diagnosis function *3

*1 How to display the check sum information
You can check the check sum information by pressing the [OK] button while each version is displayed. When the [OK] button is pressed again, the LCD returns to the version display. Pressing the [Start], [▲] or [▼] button changes the display item.

*2 (P) indicates that the firmware supports PCL/PS.

*3 There are two types of check sum information that can be checked with this function. This function checks if these two types of check sum information match each other. When the [OK] button is pressed while "ROM Check Sum" is displayed, check is automatically conducted for each ROM of each software part. When the check sum matches, "OK" is displayed on the LCD. When all ROMs result in OK, "ROM Check Sum OK" is displayed at the end, and the operation is finished. When the check sum of any ROM does not match, "NG" is displayed, and the display stops.

1.3.10 Check sensor operation (function code: 32)

<Function>

This function is used to check that the sensors are operating normally.

<Operation Procedure>

(1) Press the [3] and [2] buttons in this order in the initial state of maintenance mode. The sensor operating conditions defined in the table below are applied.
For example, when paper tray 2 is set, "C1C2T2TNNTST" (1st group) is displayed on the LCD. When paper tray 2 is not set, "C1****TNNT**" is displayed.

(2) Pressing the [Start] button displays the next group.
The table below summarizes the displays on the LCD, sensor names and detection status.

	LCD	Sensor names	Detection status (displayed / not displayed)
Group 1	C1	T1 paper feed sensor	Paper tray 1 closed / Paper tray 1 open
	C2	T2 paper feed sensor	Paper tray 2 closed / Paper tray 2 open
	T2	T2 connect sensor	Paper tray 2 connected / Paper tray 2 not connected
	TN	Toner sensor	Beam obstructed / Beam not obstructed
	NT	New toner sensor	Sensor pressed / Sensor not pressed
	ST	Output tray stuck sensor (OEM model only)	Ejected paper not yet full / Ejected paper full
Group 2	CV	Front cover sensor	Front cover closed / Front cover open
	RC	Back cover sensor	Back cover closed / Back cover open
	PO	Eject sensor	No paper / Paper set
	RM	Registration front sensor	No paper / Paper set
	RA	Registration rear sensor	No paper / Paper set
	MP	MP paper empty sensor	No paper / Paper set
	30	Internal temperature thermistor	Temperature in the machine displayed
Group 3	DF	Document detection sensor	No document / Document set
	DR	First side document scanning position sensor	No document / Document set
	AC	ADF cover sensor	ADF cover closed / ADF cover open
	DB	Second side document scanning position sensor	No document / Document set

(3) Change the conditions subject to sensor detection and check that the display on the LCD changes depending on the sensor status. For example, feed the paper through the registration front or rear sensor, open the front cover or back cover, remove the toner cartridge, create paper jam at the exit, supply paper from the MP tray, or set the paper tray.

(4) Operate the sensor from OFF to ON as below to check the operation of the corresponding solenoid or clutch.

Sensor operation	Solenoid / clutch operation
Change T1 paper feed sensor from OFF to ON.	The T1 clutch remains ON for the specified time.
Change MP paper empty sensor from OFF to ON.	The MP solenoid remains ON for the specified time.
Change registration front sensor from OFF to ON.	The duplex solenoid remains ON for the specified time.
Change registration rear sensor from OFF to ON.	The registration clutch remains ON for the specified time.
Change new toner sensor from OFF to ON.	The develop clutch 51R remains ON for the specified time.

(5) When the [Stop/Exit] button is pressed, this operation is finished, and the machine returns to the initial state of maintenance mode.

■ **Location of sensors**

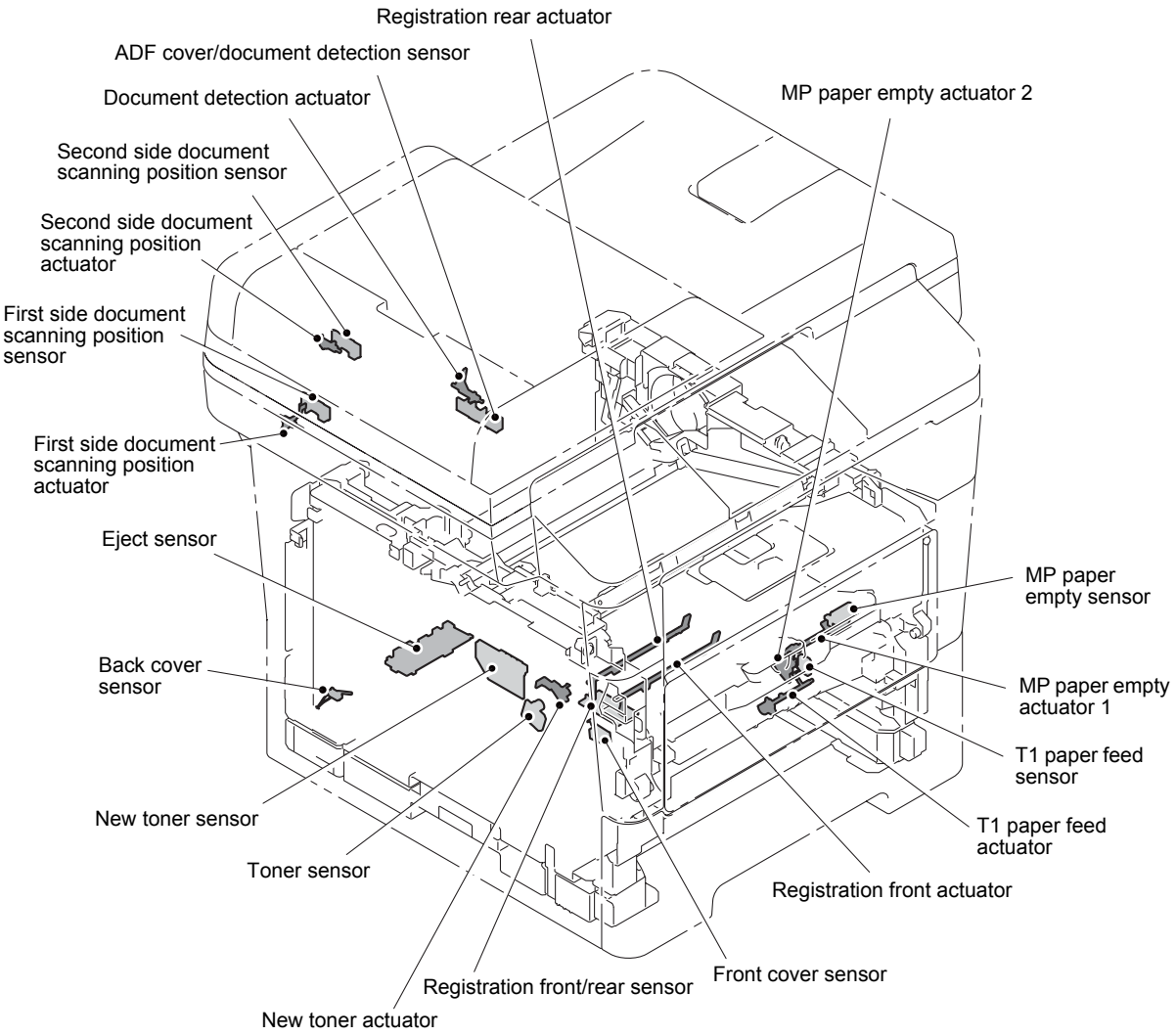

Fig. 5-10

1.3.11 Display LAN connection status (function code: 33)

<Function>

This function is used to check the connection status of the wired LAN.

<Operation Procedure>

(1) Press the [3] button twice in the initial state of maintenance mode. The current connection status of the wired LAN (see the table below) is displayed on the LCD.

(2) When the [Stop/Exit] button is pressed, the machine returns to the initial state of maintenance mode.

LCD	Wired LAN connection status
Active 1000B-FD	1000B-FD
Active 1000B-HD	1000B-HD
Active 100B-FD	100B-FD
Active 100B-HD	100B-HD
Active 10B-FD	10B-FD
Active 10B-HD	10B-HD
Inactive	Not connected

Confidential

1.3.12 Set PC print functions (function code: 43)

<Function>

This function is used to change the settings of the various print functions summarized in the table below.

<Operation Procedure>

(1) Press the [4] and [3] buttons in this order in the initial state of maintenance mode. "Manual Feed" is displayed on the LCD.

(2) Press the [▲] or [▼] button to display the function you want to change the setting of, and press the [OK] button.

(3) For fixed parameters (On/Off, etc.), press the [▲] or [▼] button to display the setting you want to apply, and press the [OK] button. The setting is saved.
For parameters requiring numerical value entry, use the keypad to enter a numerical value, and press the [OK] button. The setting is saved.

(4) Press the [Stop/Exit] button to return the machine to the initial state of maintenance mode.

■ **Setting functions**

LCD	Description	Set value	Default
Manual Feed	Manual feed setting	On/Off	Off
Resolution	Print resolution	300/600/1,200 dpi	600 dpi
Toner Save	Toner save mode setting	On/Off	Off
Density	Print density level	-6 to 6	0
JB-Can Time	Time until host timeout is triggered when job is cancelled	0 to 225 (s)	4 (s)
Sleep Time	Time until sleep mode is entered	0 to 99 (min)	5 (min)
Page Protection	Page memory setting	Off/Letter/A4/Legal/Auto	Off
Emulation	Emulation (print language) setting	Auto/HP/PS	Auto
Auto I/F Time	Interface open time	1 to 99 (s)	5 (s)
Media Type	Paper type setting	Thin/Plain/Thick/ Thicker/Trancparency/ Recycled/Bond/ Envlopes/EnvThin/ EnvThick	Plain or Thin
Paper Size	Image development area setting	Letter/Legal/A4/ Executive/B5/JISB5/A5/ B6/A6/Monarch/C5/ COM10/DL/DLL/ A4Long/PostCard/Folio	Letter or A4
Copies	Number of copies	1 to 99 (copies)	1 (copies)
Orientation	Print direction setting	Portrait/Landscape	Portrait
P-Pos X-Offset	Print position offset in X (landscape) direction	-500 to 500 (1/300 dpi)	0 (1/300 dpi)
P-Pos Y-Offset	Print position offset in Y (portrait) direction	-500 to 500 (1/300 dpi)	0 (1/300 dpi)
AutoFF	Auto form feed setting	On/Off	Off
AutoFF Time	Timeout period of auto form feed	1 to 99 (s)	5 (s)
FF Surpress	Blank page skip setting	On/Off	Off
Auto LF	Auto linefeed (LF) setting	On/Off	Off
Auto CR	Auto carriage return (CR) setting	On/Off	Off
Auto WRAP	Setting for Auto CRLF at print width	On/Off	Off

LCD	Description	Set value	Default
Auto Skip	Setting to skip at back end/tip of paper	On/Off	On
Left Margin	Left margin setting	0 to 145 (columns)	0 (column)
Right Margin	Right margin setting	10 to 155 (columns)	80 (columns)
Top Margin	Top margin setting	0 to 2.00 (inches)	0.5 (inches)
Bottom Margin	Bottom margin setting	0 to 2.00 (inches)	0.5 (inches)
Lines	Setting of text lines per page	5 to 128 (lines)	60 (lines)
Error Print	Error Print setting in the event of PostScript error	On/Off	On

■ Detailed description

LCD	Detail description
Manual Feed	Valid for printing from the computer, or for printing NetWorkConfig, TestPrint, Fontlist, or Configuration from the panel. When the tray is selected on the computer, the setting on the computer supersedes the setting on the LCD.
Resolution	Valid for printing from the computer. When the resolution is set on the computer, the setting on the computer supersedes the setting on the LCD.
Toner Save	Valid for all types of printing except copy, and the Function Menu setting can also be changed. When Toner Save is set on the computer, the setting on the computer supersedes the setting on the LCD.
Density	Valid for printing from the computer, or for printing NetWorkConfig, TestPrint, FontList, or Configuration from the panel. Linked with the Toner Save setting, and the density is determined based on both settings. When the density is set on the computer, the setting on the computer supersedes the setting on the LCD.
JB-Can Time	Sets the time until the host timeout is triggered when a job is cancelled. The setting unit is on the second time scale.
Sleep Time	Sets the time until the sleep mode is entered. The Function Menu setting can also be changed.
Page Protection	Sets the page memory to be secured for data processing before printing in the computer. As this is a setting in the PCL-Core, this does not affect the memory management of the machine.
Emulation	Changes the print language. The Function Menu setting becomes valid. When the data contains the ENTER LANGUAGE setting, this setting supersedes the setting on the LCD.
Auto I/F Time	Changes the interface open time. This setting becomes valid when PC-Print is instructed, and becomes invalid when PC-Scan or Remote-SetUp is instructed.
Media Type	Valid for printing from the computer. When the type of paper is set on the computer, the setting on the computer supersedes the setting on the LCD. The default varies depending on the country setting. "Thin" is the default for China and "Plain" is the default for other countries.
Paper Size	Changes the image development area. Sets the drawing size for PC-Print, instead of the setting for Paper Size in the menu. When the paper size is set on the computer, the setting on the computer supersedes the setting on the LCD. The default varies depending on the country setting. "Letter" is the default for the US and Canada and "A4" is the default for other countries.
Copies	Valid for printing from the computer. When the number of copies is set on the computer, the setting on the computer supersedes the setting on the LCD.

LCD	Detail description
Orientation	Changes the printing direction. Valid for printing from the computer.
P-Pos X-Offset	Sets the print position offset in the X (landscape) direction. Valid for printing from the computer. When X-Offset is set on the computer, the setting on the computer supersedes the setting on the LCD.
P-Pos Y-Offset	Sets the print position offset in the Y (portrait) direction. Valid for printing from the computer. When Y-Offset is set on the computer, the setting on the computer supersedes the setting on the LCD.
AutoFF	Sets ON or OFF for AutoFF (automatic form feed). Valid for printing from the computer.
AutoFF Time	Sets the time until timeout is issued when AutoFF is set to ON.
FF Surpress	Sets whether to skip blank pages. Valid for printing from the computer. On or Off for the blank data when copying or faxing cannot be changed in this setting.
Auto LF	Sets the auto linefeed.
Auto CR	Sets the auto carriage return. Adds CR to the LF code.
Auto WRAP	Sets the auto CRLF at the print width.
Auto Skip	Sets whether to skip at the backend or tip of paper. Adds a blank space.
Left Margin	Sets the column space at the left side.
Right Margin	Set the column space at the right side.
Top Margin	Sets the space at the top.
Bottom Margin	Sets the space at the bottom.
Lines	Sets the number of lines in the PCL.
Error Print	Sets the Error Print in the event of a BR-Script 3 error.

Confidential

1.3.13 Change USB No. return value / Adjust left-end print start position on second side when duplex printing / Change ON/OFF setting for Deep Sleep function (function code: 45)

■ Change USB No. return value

<Function>

When the operating system (OS) installed on the computer is Windows Vista®, and the machine is connected to this computer using USB2.0FULL, the OS may not be able to obtain the USB device serial number depending on the computer and USB device. If the serial number cannot be obtained, the number of devices increases each time the device is connected to the computer. To avoid this problem, setting this function to "USBNo.=ON" can fix the USB No. return value to "0".

LCD	Description
USBNo. = ON	Returns "0".
USBNo. = OFF	Returns the serial number of the machine. (Default)

The setting currently selected is marked "*" at the end of the display.

<Operation Procedure>

(1) Press the [4] and [5] buttons in this order in the initial state of maintenance mode. "USBNo." is displayed on the LCD.

(2) Press the [OK] button. "USBNo.=ON" is displayed on the LCD.

(3) Press the [▲] or [▼] button to display "USBNo.=ON" when fixing the serial number return value to "0" or "USBNo.=OFF" when not fixing it.

(4) Press the [OK] button. "Accepted" is displayed on the LCD, and the machine returns to the initial state of maintenance mode.

(5) Turn OFF the power switch.

Note:
- The setting is applied after the power switch is turned OFF and then ON again.

■ Adjust left-end print start position on second side when duplex printing

<Function>

In the event that the left-end print start position deviates on the second side when duplex printing, use this function to adjust the position left and right.

The adjustable range is -100 to 750 (unit: 300 dpi). (Shifted to left when the value is negative)

<Operation Procedure>

(1) Press the [4] and [5] buttons in this order in the initial state of maintenance mode. "USBNo.=ON" is displayed on the LCD.

(2) Press the [▲] or [▼] button to display "DX.XAdjust" on the LCD.

(3) Press the [OK] button. "DX.XAdjust=**" is displayed on the LCD.
(The value currently set is displayed for **.)

(4) To shift the writing start position to the left, press the [▼] button to decrease the value. To shift the position to the right, press the [▲] button to increase the value.

(5) Press the [OK] button. "Accepted" is displayed on the LCD, and the machine returns to the initial state of maintenance mode.

■ Change ON/OFF setting for Deep Sleep function when Deep Sleep function is enabled and machine has Storage Data (Secure)

<Function>

When the machine has the Storage Data (Secure) available, use this function to set whether to permit the machine to enter Deep Sleep mode.

LCD	Description
DpSlp.StrDt = ON	The Deep Sleep function is activated even when the machine has Storage Data (Secure) available. (Default)
DpSlp.StrDt = OFF	The Deep Sleep function is not activated when the machine has Storage Data (Secure) available.

The setting currently selected is marked "*" at the end of the display.

Note:

- This function is effective when the Deep Sleep function is enabled (ON).

<Operation Procedure>

(1) Press the [4] and [5] buttons in this order in the initial state of maintenance mode. "USBNo.=ON" is displayed on the LCD.

(2) Press the [▲] or [▼] button to display "DpSlp.StrDt" on the LCD.

(3) Press the [OK] button. "DpSlp.StrDt=ON" is displayed on the LCD.

(4) Display "DpSlp.StrDt=ON" on the LCD when permitting the machine to enter Deep Sleep mode, or "DpSlp.StrDt=OFF" when not permitting it.

(5) Press the [OK] button. "Accepted" is displayed on the LCD, and the machine returns to the initial state of maintenance mode.

1.3.14 Set country/language (function code: 52)

<Function>

This function is user accessible, and is used to customize the EEPROM according to the language, function settings, and worker switch settings.

Note:
- This function can be used only in the following nations: France, Belgium, Holland, Norway, Sweden, Finland, Denmark, Austria, Czech, Hungary, Poland, General (Others), Bulgaria, Romania, Slovakia, Spain, Portugal

<Operation Procedure>

Non touch panel models

(1) Press the [5] and [2] buttons in this order in the initial state of maintenance mode. "Set Country" is displayed on LCD, and names of country in their respective language follows.

(2) Press the [▲] or [▼] button to select country, and press the [OK] button. The selected country is displayed in its language for confirmation.

(3) Press "Yes" if the displayed country is correct, and press the [OK] button. The EEPROM is now customized, and the machine returns to the ready state.

Touch panel models

(1) Press the [5] and [2] buttons in this order in the initial state of maintenance mode. "Set Country" is displayed on LCD, and names of country in their respective language follows.

(2) Press the name of country desirable for the user. The selected country is displayed in its language for confirmation.

(3) Press "Yes" if the displayed country is correct. The EEPROM is now customized and the machine returns to the ready state.

Note:
- The country name indicated on the LCD varies depending on the area (code input in Function code 74) as shown in the table below.

Germany Austria	France Belgium Netherlands	Oceania	Pan-Nordic	Iberia	East Europe	South Africa Turkey Gulf
Deutschland	France	Australia	Norge	España	österreich	South Africa
österreich	België / Belgique	New Zealand	Suerige	Portugal	Cheska republika	Türkiye
	Nederland		Suomi	Italia	Magyarorazăg	Others
			Danmark		Polska	
			Others		България	
					România	
					Slovensko	
					Others	

1.3.15 Transfer received fax data/log information (function code: 53)

<Function>

When the machine is unable to print the received fax data due to an error current in the printing mechanism, this function is used to transfer the data to another machine. The communication management report, communication list, or machine log information can also be transferred.

Note:

- The number of files that can be transferred in one operation is up to 99. When there are 100 or more files, the operation procedure below must be performed several times to transfer all files.
- When there are both color data files and monochrome data files, monochrome data files are transferred first. When the color function is not supported by the receiver machine, color data files cannot be transferred and an error occurs.

<Operation Procedure>

(1) Press the [5] and [3] buttons in this order in the initial state of maintenance mode. "FAX TRANSFER" is displayed on the LCD.

- To check the number of files received, press the [1] button. "1. NO. OF JOBS" is displayed on the LCD.
  Press the [OK] button, and the number of files received is displayed, for example, "NO. OF JOBS: 10".
- To transfer only the communication management report, press the [2] button. "2. ACTIVITY" is displayed on the LCD.
- To transfer the received data, press the [3] button. (The communication management report is also transferred.)
  "3. DOCUMENTS" is displayed on the LCD. If there are no received files, "NO DOCUMENTS" is displayed.
- To transfer the communication list (latest communication information), press the [4] button. "4. COM.LIST (NEW)" is displayed.
- To transfer the communication list (information for the past three errors), press the [5] button. "5. COM.LIST (ERR3)" is displayed on the LCD.
- To transfer the maintenance information (list printed by function code 77), press the [6] button. "6. MNT77LIST" is displayed on the LCD.

(2) Press the [OK] button while "2. ACTIVITY", "3. DOCUMENTS", "4. COM.LIST (NEW)", "5. COM.LIST (ERR3)", or "6. MNT77LIST" is displayed on the LCD. "ENTER NO&SET" is displayed on the LCD.

(3) Enter the telephone number of the receiver machine, and press the [OK] button.

(4) "ACCEPTED" is displayed for two seconds, and the machine starts dialing to transfer the data.

Note:

- Be sure to enter the telephone number using the numerical buttons. One-touch dialing is not allowed in this procedure.
- No station ID will be attached to the data to be transferred. Instead, a cover page and end page as shown on the next page will be automatically attached.

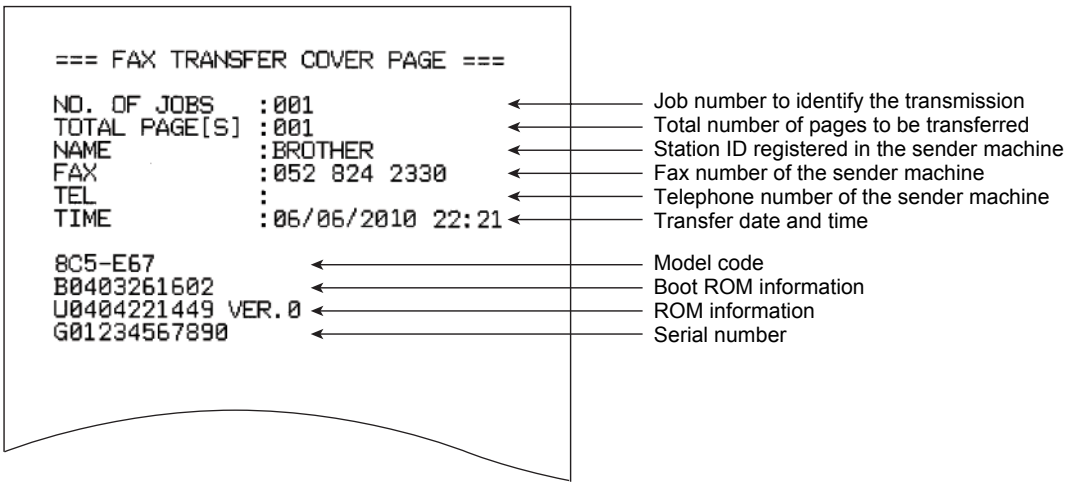

Fig. 5-11

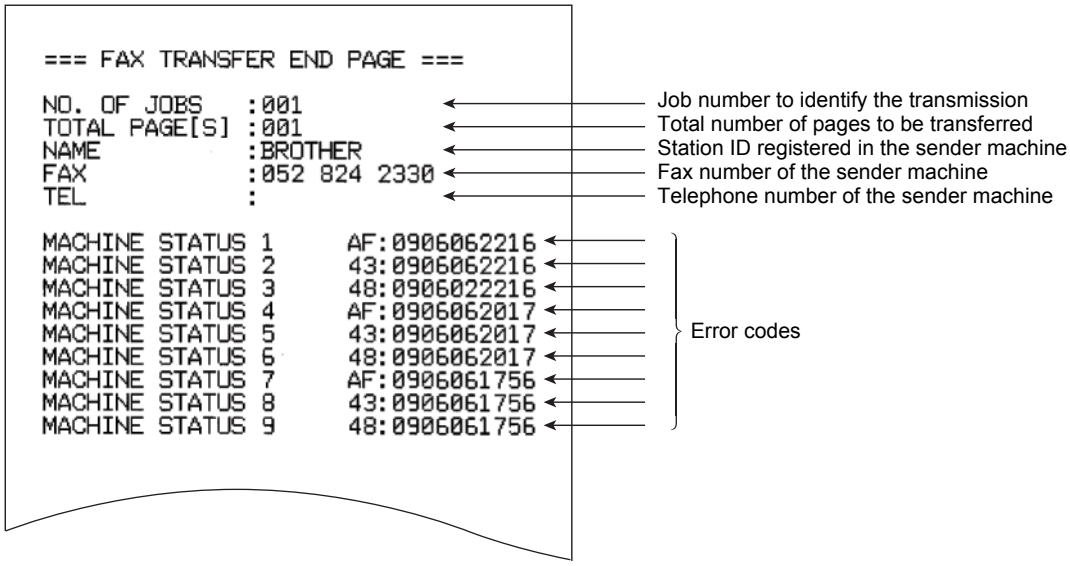

Fig. 5-12

1.3.16 Fine-tune scanning position (function code: 54)

<Function>

This function is used to adjust the scanning start/end positions for the ADF and the document scanner unit.

<Operation Procedure>

(1) Press the [5] and [4] buttons in this order in the initial state of maintenance mode. "SCAN START ADJ." is displayed on the LCD.

(2) After two seconds, "▲: ADF ▼: FB" is displayed on the LCD. Select the item you want to adjust the start position. Press [▲] to select the ADF and [▼] to select the document scanner unit.

(3) Duplex scanning models: After two seconds, "▲: FRONT ▼: BACK" is displayed on the LCD. Select the item you want to adjust the start position. Press [▲] to select the first side and [▼] to select the second side.
Single-side scanning models: Proceed to step (4).

(4) The current scanning position compensation level is displayed on the LCD.
(Compensation levels can be adjusted in 11 steps from 5 to -5.)

(5) Press the [▲] button to adjust the compensation level in the positive direction or press the [▼] button to adjust it in the negative direction.

(6) Press the [OK] button. "Accepted" is displayed on the LCD, and the machine returns to the initial state of maintenance mode.

1.3.17 Acquire white level data and set CIS scan area (function code: 55)

<Function>

This function is used to obtain the white level of the CIS unit, and store this data and the scan area in the EEPROM of the main PCB.

Note:

- In the event that the correct white level cannot be obtained when this function is executed after the machine is released from Deep Sleep mode, install the latest firmware. If the firmware cannot be installed, open the front cover and then close it again, and wait until the main motor completely stops. Then retry installing the firmware.

<Operation Procedure>

(1) Press the [5] button twice in the initial state of maintenance mode. "Press START" is displayed on the LCD.

(2) Press the [Start] button. "SCANNER AREA SET" is displayed on the LCD, and the white level data is obtained.

(3) After several seconds, the compensation value for the white level data/scanning width is stored in the EEPROM, and the machine returns to the initial state of maintenance mode.
If any error is detected during this operation, "SCANNER ERROR" is displayed on the LCD for single-side scanning models, and "SCANNER ERR ADF" or "SCANNER ERR FB" for duplex scanning models.
When the [Stop/Exit] button is pressed, the machine returns to the initial state of maintenance mode.

1.3.18 Adjust touch panel (function code: 61)

<Function>

This function is used to adjust the detection area on the touch panel.

Note:

- This adjustment requires a touch panel stylus with a thin tip. A commercially available stylus designed for electronic dictionaries or personal digital assistance (PDA) can be used. If one is not available at hand, order a "STYLUS" from Brother's parts list.

<Operation Procedure>

(1) Press the [6] and [1] buttons in this order in the initial state of maintenance mode. The adjustment screen shown below appears on the LDC.

(2) Use a touch panel stylus and touch the center on the mark at the upper left corner of the screen. The mark disappears when touched. Similarly touch the mark at the lower left, lower right, upper right and center.

Note:

- Do not use any tools other than a touch panel stylus. In particular, never use a pointed tool (e.g. screwdriver). Using such a tool will damage the touch panel.
- Do not touch the touch panel with your fingers. The contact area of a finger is too large to adjust the touch panel precisely.
- If no operation is performed for one minute or the [Stop/Exit] button is pressed, the machine returns to the initial state of maintenance mode.

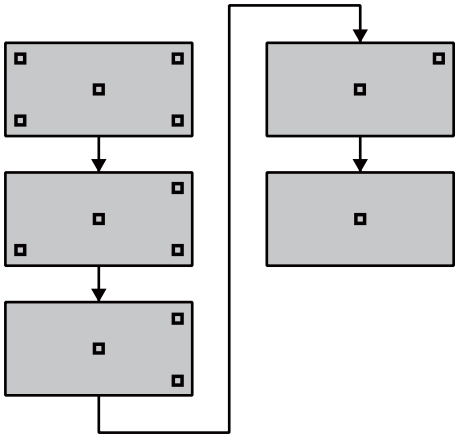

Fig. 5-13

(3) When the center (5th mark) is touched, "OK" is displayed on the LCD if the specified area is adjusted correctly. Then, the machine returns to the initial state of maintenance mode.

Note:

- If the mark is touched wrongly or a wrong position is touched, "NG" is displayed on the LCD. When the [Start] button is pressed while "NG" is displayed, the LCD returns to the display in step (2). Touch from the upper left mark in order again.
- If "NG" is still displayed even after this operation is repeated two to three times, check the connection of the touch panel harness. When the connection is correct, replace the LCD unit.

1.3.19 Continuous print test (function code: 67)

<Function>

This function is used to conduct paper feed and eject tests while printing patterns.

<Operation Procedure>

(1) Press the [6] and [7] buttons in this order in the initial state of maintenance mode. "SELECT: K 100%" is displayed on the LCD.

(2) Refer to the table below (print pattern), and press the [▲] or [▼] button to select the pattern you want to print. Then press the [OK] button. "SELECT: A4" is displayed on the LCD.

(3) Refer to the table below (paper size), and press the [▲] or [▼] button to select the paper size you want to use. Then press the [OK] button. "SELECT: TRAY1" is displayed on the LCD.

(4) Refer to the table below (print type), and press the [▲] or [▼] button to select the tray with paper set. Then press the [OK] button. "PAPER FEED TEST" is displayed on the LCD, and printing of the test pattern starts using the selected conditions.

(5) When the [Stop/Exit] button is pressed, printing is stopped, and the machine returns to the initial state of maintenance mode.

Print pattern

LCD	Description
SELECT: K 100%	100% solid printing (continuous printing)
SELECT: K 1%	1% intermittent pattern printing (500-page printing)
SELECT: K 5%	5% intermittent pattern printing (500-page printing)
SELECT: Lattice	Lattice printing (continuous printing)

Paper size

LCD	Description
SELECT: A4	A4
SELECT: LETTER	Letter

Print type

LCD	Description
SELECT: TRAY1	Single-side printing from paper tray 1
SELECT: TRAY2	Single-side printing from paper tray 2
SELECT: MP	Single-side printing from MP tray
SELECT: TRAY1 DX	Duplex printing from paper tray 1
SELECT: TRAY2 DX	Duplex printing from paper tray 2
SELECT: MP DX	Duplex printing from MP tray

Note:

- Duplex printing only supports 5% intermittent pattern printing. Single-side printing applies to other patterns even when duplex printing is specified.

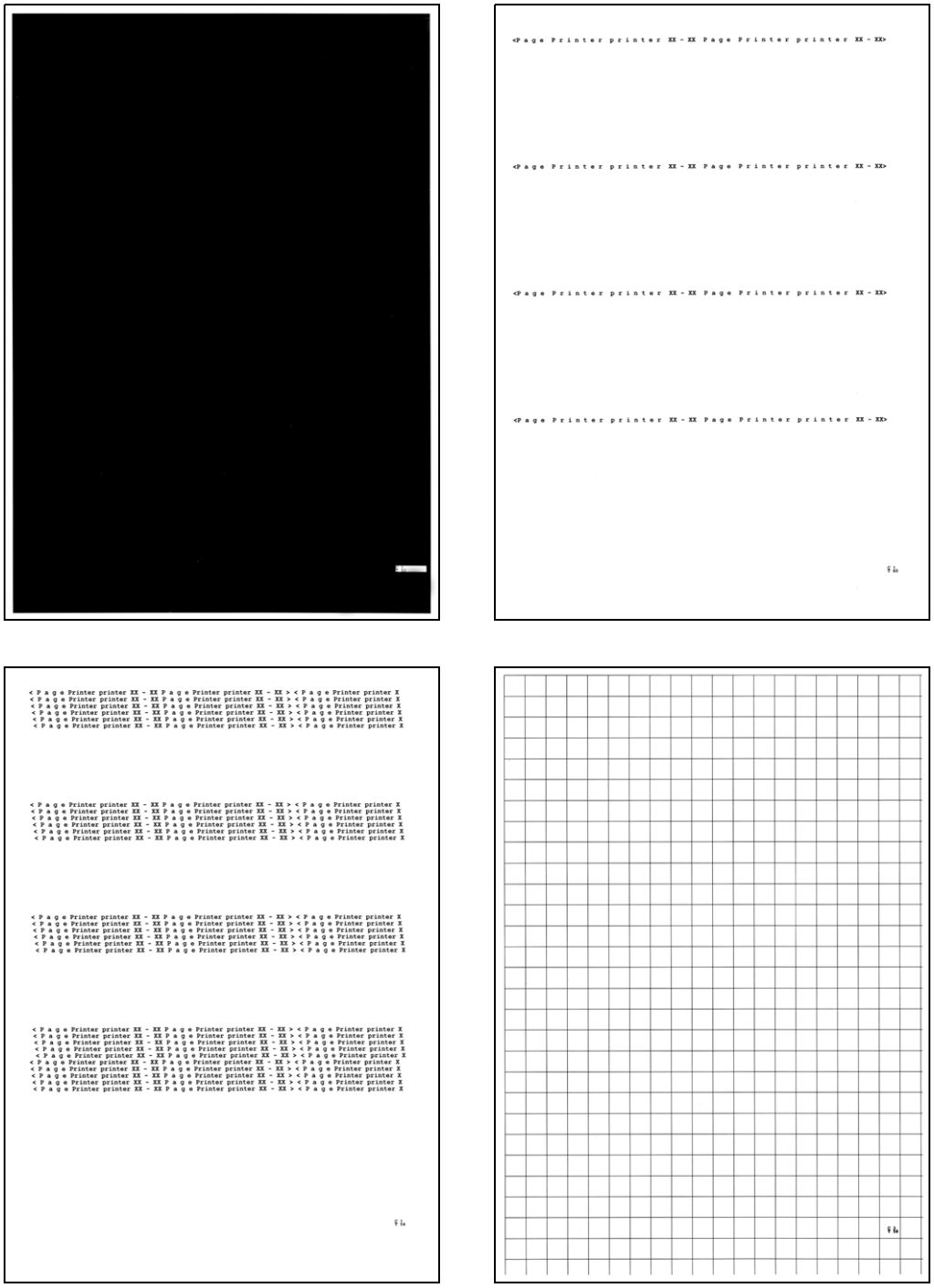

Fig. 5-14

Confidential

1.3.20 Print frame pattern (single-side printing) (function code: 69)

<Function>

This function is used to print a frame pattern on a single side of the paper and check for printing flaws.

<Operation Procedure>

Be sure to set the Letter size paper for test pattern printing before commencing the following procedure.

(1) Press the [6] and [9] buttons in this order in the initial state of maintenance mode. "PRINTING" is displayed on the LCD, and the frame pattern is printed on a single side of the paper.

(2) Press the [OK] button. "PRINTING" is displayed on the LCD, and the frame pattern is printed on a single side of the paper.
When printing is completed, "WAKU SX" is displayed on the LCD.
If printing fails, printing is stopped with displaying any of the errors shown in the table below. To retry printing, refer to the "Remedy" in the table below to eliminate the error cause, and press the [Start] button.
"WAKU SX" is displayed on the LCD. Press the [OK] button.
"PRINTING" is displayed on the LCD, and the frame pattern is printed on a single side of the paper.

(3) To print the frame pattern again, press the [OK] button.

(4) When the [Stop/Exit] button is pressed, the machine returns to the initial state of maintenance mode.

Error display

LCD	Remedy
Replace Toner	Replace the toner cartridge.
Cover is Open	Close the front cover.
No Paper	Set paper and close the paper tray.
Jam Tray1	Remove the jammed paper and close the paper tray.
Jam Rear	Remove the jammed paper and close all covers.

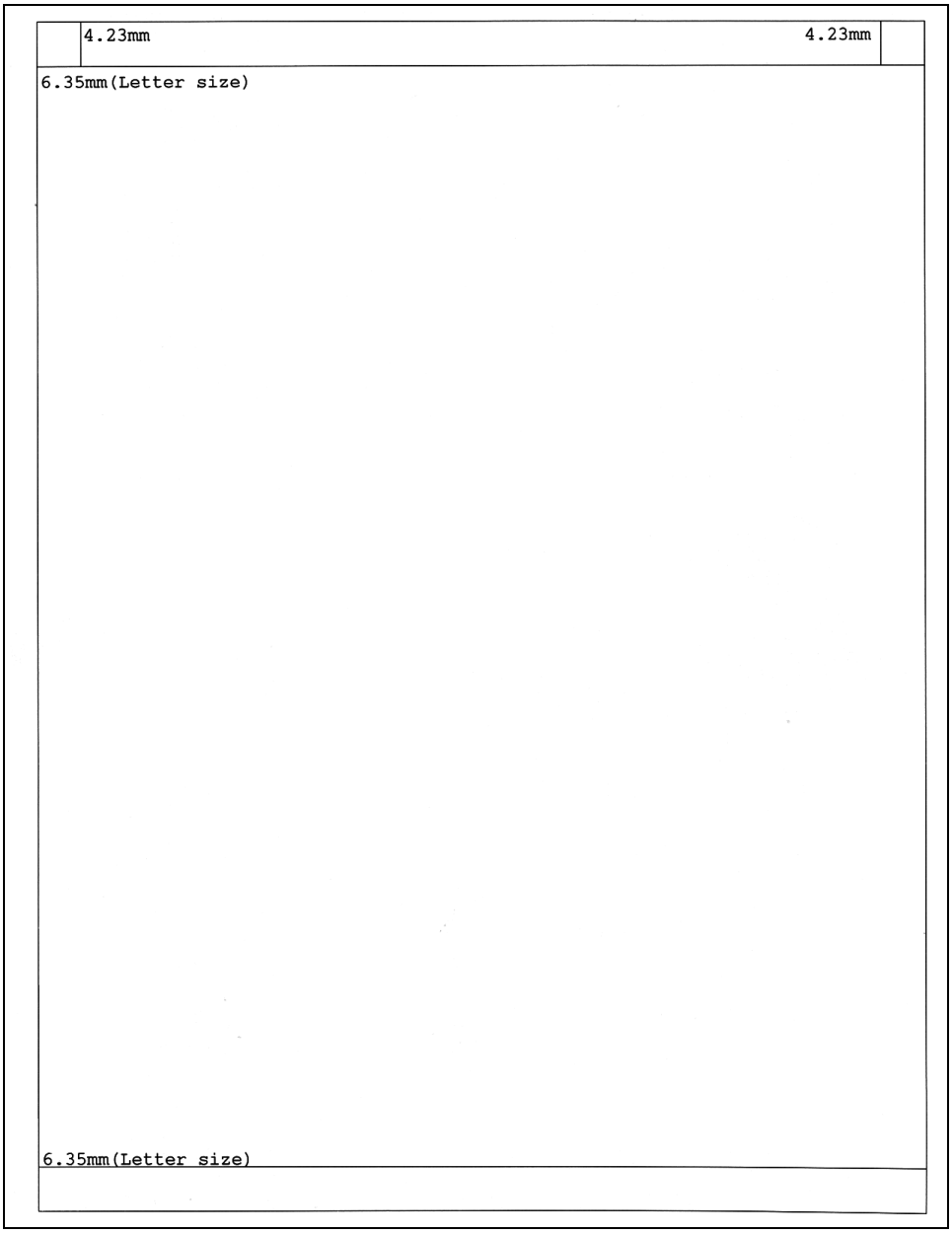

Fig. 5-15

Confidential

1.3.21 Print frame pattern (duplex printing) (function code: 70)

<Function>

This function is used to print a frame pattern on both sides of the paper and check for printing flaws.

<Operation Procedure>

Be sure to set the Letter size paper for test pattern printing before commencing the following procedure.

(1) Press the [7] and [0] buttons in this order in the initial state of maintenance mode. "PRINTING" is displayed on the LCD, and the frame pattern is printed on both sides of the paper.

(2) When printing is completed, "WAKU DX" is displayed on the LCD.
If printing fails, printing is stopped with displaying any of the errors shown in the table below. To retry printing, refer to the "Remedy" in the table below to eliminate the error cause, and press the [Start] button.
"WAKU DX" is displayed on the LCD. Press the [OK] button.
"PRINTING" is displayed on the LCD, and the frame pattern is printed on both sides of the paper.

(3) To print the frame pattern again, press the [OK] button.

(4) When the [Stop/Exit] button is pressed, the machine returns to the initial state of maintenance mode.

Error display

LCD	Remedy
Replace Toner	Replace the toner cartridge.
Cover is Open	Close the front cover.
No Paper	Set paper and close the paper tray.
Jam Tray1	Remove the jammed paper and close the paper tray.
Jam Rear	Remove the jammed paper and close all covers.

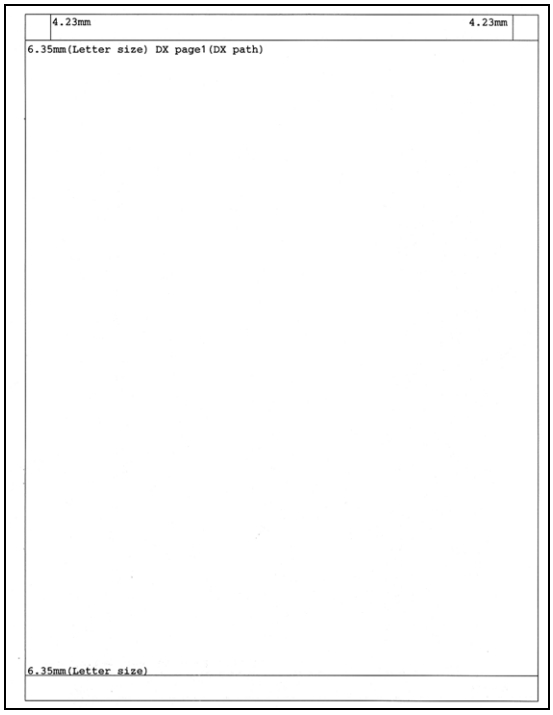

(First side)

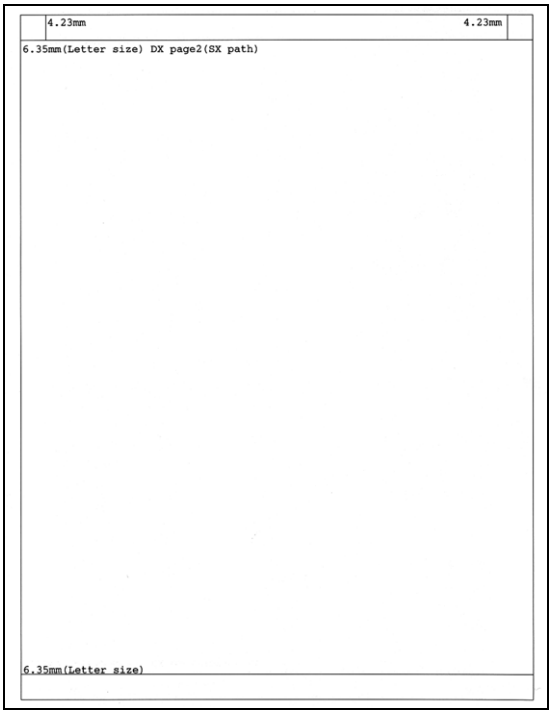

(Second side)

Fig. 5-16

Confidential

1.3.22 Print solid pattern (function code: 71)

<Function>

This function is used to print a solid pattern to check whether the developer roller or exposure drum is dirty or damaged.

<Operation Procedure>

Be sure to set the Letter size paper for test pattern printing before commencing the following procedure.

(1) Press the [7] and [1] buttons in this order in the initial state of maintenance mode.
"K_100%" is displayed on the LCD.

(2) Press the [▲] or [▼] button to display "K_100%" on the LCD when printing the black solid pattern or "W_100%" when printing the white solid pattern.

(3) Press [OK] button. "PRINTING" is displayed on the LCD, and printing of the test pattern starts.
If printing fails, printing is stopped with displaying any of the errors shown in the table below. To retry printing, refer to the "Remedy" in the table below to eliminate the error cause, and press the [Start] button.
"K_100%" or "W_100%" is displayed on the LCD. Press the [OK] button.
"PRINTING" is displayed on the LCD, and printing of the test pattern starts.

(4) When the [Stop/Exit] button is pressed, the machine returns to the initial state of maintenance mode.

Error display

LCD	Remedy
Replace Toner	Replace the toner cartridge.
Cover is Open	Close the front cover.
No Paper	Set paper and close the paper tray.
Jam Tray1	Remove the jammed paper and close the paper tray.
Jam Rear	Remove the jammed paper and close all covers.

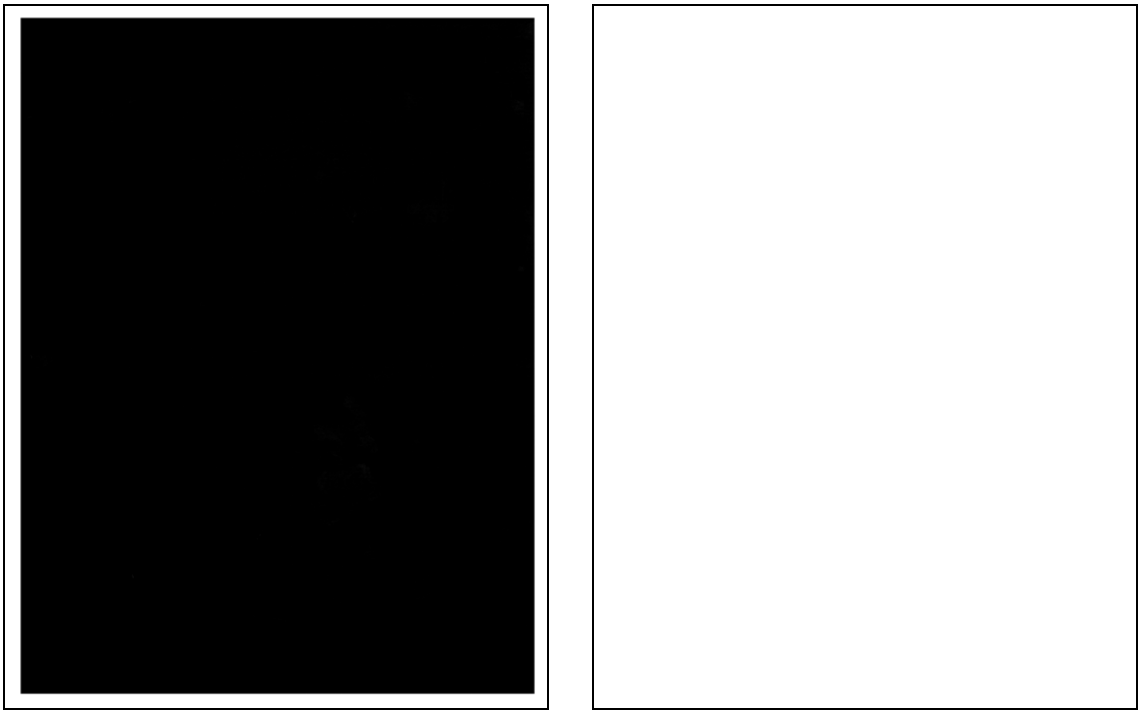

Fig. 5-17

1.3.23 Setting by country (function code: 74)

<Function>

This function is used to customize the machine according to language, function settings, and worker switch settings.

<Operation Procedure>

(1) Press the [7] and [4] buttons in this order in the initial state of maintenance mode. The country code currently set is displayed on the LCD.

(2) Enter the country code you want to set.

(3) Press the [Start] button. The new setting is saved, and "PARAMETER INIT" is displayed on the LCD. The machine then returns to the initial state of maintenance mode.

(4) When the [Stop/Exit] button is pressed during setting, the machine returns to the initial state of maintenance mode without saving any changes that have been made.

Note:

- If there is no entry for one minute or longer, the machine returns to the initial state of maintenance mode automatically, regardless of the display status.

<Country code list>

Country	DCP-8110D	DCP-8110DN DCP-8112DN	DCP-8150DN DCP-8152DN	DCP-8155DN DCP-8157DN	DCP-8250DN
U.S.A.	—	0001	0301	0501	—
Canada	—	—	—	—	—
Brazil	—	0042	0342	5542	—
Argentina	—	—	0336	0536	—
Chile	—	—	—	0536	—
Peru	—	—	—	0536	—
Germany	—	1053 (1003)	—	—	5053 (5003)
U.K.	—	1004	—	—	5004
France	—	1055 (1004)	—	—	5055 (5005)
Australia	—		—	0540	—
Norway	—	1004	—	—	5004
Belgium	—	1055 (1008)	—	—	5055 (5008)
Netherlands	—	1055 (1004)	—	—	5055 (5009)
Switzerland	—	1004	—	—	5004
Finland	—	1004	—	—	5004
Austria	—	1053 (1014)	—	—	5053 (5014)
Denmark	—	1004	—	—	5004
Spain	—	1066 (1015)	—	—	5066 (5015)
Italy	—	1066 (1004)	—	—	5066 (5016)
Portugal	—	1066 (1004)	—	—	5066 (5018)
China	—	—	—	—	—
Philippines	—	—	—	—	—
Taiwan	—	—	—	—	—
South Africa	—	1074 (1024)	—	5574 (5524)	—
Turkey	—	1074 (1025)	—	5574 (5525)	—
Sweden	—	1004	—	—	5004

Country	DCP-8110D	DCP-8110DN DCP-8112DN	DCP-8150DN DCP-8152DN	DCP-8155DN DCP-8157DN	DCP-8250DN
Newzealand	—	—	—	0540	—
Slovakia	—	1004	—	—	5004
Bulgaria	—	1004	—	—	5004
Romania	—	1004	—	—	5004
Czech Republic	—	1004	—	—	5004
Hungary	—	1004	—	—	5004
Poland	—	1004	—	—	5004
Singapore	—	—	—	4540	—
Gulf	—	1074 (1041)	—	5574 (5541)	—
Korea	—	—	—	—	—
India	—	—	—	—	—
Russia	—	1004	—	—	5004
Iran	0004	—	—	—	—
PAN-NORDIC Others	—	1004	—	—	5004
CEE-General Others	—	1004	—	—	5004

Country	MFC-8510DN MFC-8512DN	MFC-8515DN	MFC-8520DN	MFC-8710DW MFC-8712DW	MFC-8910DW MFC-8912DW	MFC-8950DW MFC-8952DW	MFC-8810DW
U.S.A.	0101	—	—	0401	0601	4101	0701
Canada	0102	—	—	0402	0602	4102	—
Brazil	0142	—	—	4442	4642	4142	—
Argentina	—	—	—	0436	0636	4136	—
Chile	—	—	—	0436	0636	—	—
Peru	—	—	—	0436	0636	—	—
Germany	0153 (0103)	—	0253 (0203)	—	—	4153 (4103)	—
U.K.	0104	—	0204	—	—	4104	—
France	0155 (0105)	—	0255 (0205)	—	—	4155 (4105)	—
Australia	0156 (0106)	—	—	—	0656 (0606)	4156 (4106)	—
Norway	0157 (0107)	—	—	—	—	4157 (4107)	—
Belgium	0155 (0108)	—	0255 (0208)	—	—	4155 (4108)	—
Netherlands	0155 (0109)	—	0255 (0209)	—	—	4155 (4109)	—
Switzerland	0110	—	0210	—	—	4110	—
Finland	0157 (0112)	—	—	—	—	4157 (4112)	—
Austria	0153 (0114)	—	0253 (0214)	—	—	4153 (4114)	—
Denmark	0157 (0113)	—	—	—	—	4157 (4113)	—
Spain	0165 (0115)	—	0265 (0215)	—	—	4166 (4115)	—
Italy	0116	—	0216	—	—	4166 (4116)	—
CONSIP Italy	—	—	4216	—	—	—	—
Portugal	0165 (0118)	—	0265 (0218)	—	—	4166 (4118)	—
China	4020	4120	4220	—	—	—	—
Philippines	—	—	—	—	4621	4121	—
Taiwan	0123	—	—	—	4623	—	—

Country	MFC-8510DN MFC-8512DN	MFC-8515DN	MFC-8520DN	MFC-8710DW MFC-8712DW	MFC-8910DW MFC-8912DW	MFC-8950DW MFC-8952DW	MFC-8810DW
South Africa	0174 (0124)	—	—	—	4674 (4624)	5174 (5124)	—
Turkey	0174 (0125)	—	—	—	4674 (4625)	5174 (5125)	—
Sweden	0157 (0126)	—	—	—	—	4157 (4126)	—
Newzealand	0156 (0127)	—	—	—	0656 (0627)	4156 (4127)	—
Slovakia	0188 (0130)	—	0288 (0230)	—	—	4188 (4130)	—
Bulgaria	0188 (0132)	—	0288 (0232)	—	—	4188 (4132)	—
Romania	0188 (0133)	—	0288 (0233)	—	—	4188 (4133)	—
Czech Republic	0188 (0137)	—	0288 (0237)	—	—	4188 (4137)	—
Hungary	0188 (0138)	—	0288 (0238)	—	—	4188 (4138)	—
Poland	0188 (0139)	—	0288 (0239)	—	—	4188 (4139)	—
Singapore	0140	—	—	—	4640	—	—
Gulf	0174 (0141)	—	—	—	4674 (4641)	5174 (5141)	—
Korea	0140	—	—	—	4640	—	—
India	0145	—	—	—	4645	—	—
Russia	—	—	0248	—	—	4148	—
Iran	—	—	—	—	—	—	—
PAN-NORDIC Others	0157 (0150)	—	—	—	—	4157 (4150)	—
CEE-General Others	0188 (0150)	—	0288 (0250)	—	—	4188 (4150)	—

The above information is as of March 2016.

Please confirm the latest firmware information which is available from your local Brother Customer Service.

1.3.24 Print maintenance information (function code: 77)

<Function>

This function is used to print the maintenance information, such as the remaining amount of consumables, number of replacements, and counter values (refer to the next page).
The details to be printed are almost the same as the second page of Printer Settings.

<Operation Procedure>

(1) Press the [7] button twice in the initial state of maintenance mode. "Printing" is displayed on the LCD, and printing maintenance information starts.

(2) When printing is completed, the machine returns to the initial state of maintenance mode.

```
MAINTENANCE
①MFC-8950DW          ②Serial No.=X12345A2N000027 ③Model=8C5-F47④Country=4101 ⑤SW CheckSum=3E /NG
⑥Main ROM: Ver.X U1112121412     ⑭ROM ChkSum: 0808                ⑳NG00 ㉑00 00 ㉒01
⑦Sub ROM: Ver.0.41 P1111220846   ⑮RTC Check: OK                  ㉓OKNG ㉔00 00 00
⑧Boot ROM: B1111220846           ⑯RTC BackUp: OK                  ㉕C001000001044000
⑨Engine ROM: 0.60                ⑰Before BackUp: 10:31              00B2801000200000       000000E2
⑩Panel Main ROM: W11112209       ⑱After BackUp: 09:41             ㉖0000345C 0000345C 00000000 00000000
⑪Panel Boot ROM: 011112513       ⑲USB Prod.ID: 0299                 00000000 00000000 00000000 00000000
⑫Memory Version: a                                                  00000000 00000000 00000000 00000000
⑬RAM Size = 128Mbyte
  Remaining life of :
㉗*Toner Cartridge: 96%   ㉘**Drum Unit: 29939 (100%)㉛Fuser Unit: 99973 (100%)
                         ㉙PF Kit MP: 50000 (100%)  ㉜Laser Unit: 99973 (100%)
                         ㉚PF Kit 1: 99984 (100%)

  <Device Status>
㉝ Total Page Count: 27
㉞ Copy Count: 11
㉟ PC-Print Count: 8
㊱ List/FAX Count: 8

㊲***Average Coverage(Total): 6.01%
㊳***Average Coverage(Current)*: 6.01%

  <Drum Information>
㊴ Drum Page Count: 61
㊵ Drum Count: 926

㊶<Developing Roller Count: 1374>

㊷<Total Pages Printed>
   MP Tray: 3            Duplex: 3
   Tray 1: 21

㊸<Total Pages Printed>
   A4/Letter: 27
   Legal/Folio: 0
   B5/Executive: 0
   Envelope: 0
   A5: 0
   Others: 0

㊹<Total Pages Printed>
   Plain/Thin/Recycled: 27
   Thick/Thicker/Bond: 0
   Envelope/Env.Thick/Env.Thin: 0
   Label: 0
   Hagaki: 0

㊺<Total Paper Jams: 0>
   Jam MP Tray: 0        Jam Rear: 0
   Jam Tray 1: 0         Jam Duplex: 0
   Jam Inside: 0

㊻<Power On Time: 2 hours>
㊼<Power On Count: 24>

㊽<LL Mode: 1 / 9>

㊾<Error History (last 10 errors)>
   1:
   2:
   3:
   4:
   5:
   6:
   7:
   8:
   9:
  10:

㊿<Replace Count>
   Toner Cartridge: 0          00/00/00
   Drum Unit: 0                PF Kit MP: 0
   Fuser Unit: 0               PF Kit 1: 0
   Laser Unit: 0

  <Total Pages Printed>
(51) Current Toner: 27
(52) Previously Used Toner: 0

  <Scan Count>
(53) SX Page Count: 1      (54) DX Page Count: 4
   FB Page Count: 8
(55) ADF Jam SX: 0         (55) ADF Jam DX: 0

(56)<COM Error>
  1: 00000000  01/01/04 00:00
  2: 00000000  01/01/04 00:00
  3: 00000000  01/01/04 00:00

(57)<Developing Bias: 471V>

(58)<Engine Sensor Log>
   KO: 000000/000000      MN: 000000/000000
   RS: 000000/000000      EJ: 000000/000000

(59)<Status Log>
   80 11 01  80 11 01  80 11 01  80 07 01
   80 11 01  80 11 01  80 11 01  80 13 00
   80 11 01  80 11 01

(60)<HP ME/HP ME Log>
  00/00:00:00:00:00:00:00:00:00:00:00:00:00:00:00:00

*   Remaining life will vary depending on the types of documents printed.
**  Based on A4/Letter printing.     *** Calculated coverage.
```

Fig. 5-18

Display information

1	Model name	31	Remaining life of fuser unit
2	Serial number	32	Remaining life of laser unit
3	Model code	33	Total printed pages
4	Country code	34	Total copied pages
5	Switch check sum (factory use)	35	Total printed PC pages
6	Main firmware version	36	Total printed list/fax pages
7	Sub firmware version	37	Accumulated average coverage
8	Boot firmware version	38	Average coverage by the toner cartridge which is currently used
9	Engine firmware version	39	Drum page count
10	Panel firmware version	40	Rotations of the drum
11	Panel boot firmware version	41	Rotations of the developer roller
12	Memory version	42	Total printed pages per tray
13	ROM size	43	Total printed pages per paper size
14	ROM check sum	44	Total printed pages per paper type
15	RTC check *1	45	Paper jams that have occurred in each section in the machine
16	RTC backup *1	46	Total power distribution time
17	Time before RTC backup *1	47	The number of times that the power is turned ON
18	Time after RTC backup *1	48	The number of times/log that the low temperature/low humidity mode was entered
19	USB ID code	49	Machine error log (The last 10 errors)
20	Result of function code 55	50	The number of times that consumables have been replaced
21	Wireless LAN setting by country / Output peak	51	Total printed pages of currently set toner cartridge
22	Toner type *2	52	Total printed pages of previously set toner cartridge
23	Main PCB inspection / High-voltage PCB inspection	53	Total pages of single side scanning
24	The number of times that the discharge error / Fuser unit error / Polygon motor error occurred	54	Total pages of duplex scanning
25	Not necessary for maintenance (Factory management item)	55	Document jams that have occurred in ADF
26	Not necessary for maintenance (ADF sensor log)	56	Communication error log
27	Estimated remaining toner amount	57	Developing bias voltage value
28	Remaining life of drum unit	58	Not necessary for maintenance (Development management item)
29	Remaining life of MP paper feeding kit	59	Not necessary for maintenance (Factory management item)
30	Remaining life of paper feeding kit 1	60	Not necessary for maintenance (Factory management item)

*1 RTC: Real Time Clock

*2 00 : Starter toner
01 : Standard toner
02 : High yield toner
03 : Super high yield toner

1.3.25 Check fan operation (function code: 78)

<Function>

This function is used to check that the main fan is operating normally. The rotation speed is changed among three settings: 100%, 50% and OFF.

<Operation Procedure>

(1) Press the [7] and [8] buttons in this order in the initial state of maintenance mode. "F 100" is displayed on the LCD, and the main fan operates at 100% rotation speed.
If the main fan is faulty, "NG" is displayed on the LCD.

(2) Press the [Start] button. "F 50" is displayed on the LCD, and the main fan operates at 50% rotation speed.

(3) Press the [Start] button. "F 0" is displayed on the LCD, and the main fan stops.

(4) Press the [Start] button. "F 100" is displayed on the LCD, and the status returns to step (2). Each press of the [Start] button repeats from steps (2) to (4).

(5) When the [Stop/Exit] button is pressed, the machine returns to the initial state of maintenance mode.

Confidential

1.3.26 Display machine log information (function code: 80)

<Function>

This function is used to display the log information on the LCD.

<Operation Procedure>

(1) Press the [8] and [0] buttons in this order in the initial state of maintenance mode.
"USB:********" is displayed on the LCD.
(The machine serial number is displayed for *********.)

(2) Pressing the [Start] or [▼] button displays the next item.
Pressing the [▲] button returns to the previous item.

(3) When the [Stop/Exit] button is pressed, the machine returns to the initial state of maintenance mode.

Display information

LCD *1	Description
USB:000G8J000166	Serial number
MAC:008077112233 *2	MAC address
PCB:911309123456	Main PCB serial number
KTN_ERM:87%	Estimated remaining toner amount detected by toner sensor
KTN_RRM:67%	Estimated remaining toner amount based on the rotations of developer roller
DRUM_PG:00000000	Printed pages for drum
PFMP_PG:00000000	Pages fed from MP paper feeding kit
PFK1_PG:00000000	Pages fed from paper feeding kit 1
PFK2_PG:00000000	Pages fed from paper feeding kit 2
FUSR_PG:00000000	Printed pages for fuser unit
LASR_PG:00000000	Printed pages for laser unit
TTL_PG:00000000	Total printed pages
TTLCOPY:00000000	Total pages copied
TTLPCPT:00000000	Total pages printed via PC
TTLFAX:00000000	Total pages faxed
KCVRGUSI:4.32%	Average coverage by the toner cartridge which is currently used
KCVRGACC:3.47%	Accumulated average coverage
DRUM:00000000	Rotations of the drum
KTN_RND:00000000	Rotations of the developer roller
MP_PG:00000000	Pages printed from MP tray
TR1_PG:00000000	Pages printed from paper tray 1
DX_PG:00000000	Duplex printed pages
TR2_PG:00000000	Pages printed from paper tray 2
A4+LTR:00000000	Printed pages of A4 size and Letter size paper
LG+FOL:00000000	Printed pages of Legal size and Folio size paper
B5+EXE:00000000	Printed pages of B5 size and EXE size paper

LCD *1	Description
ENVLOP:00000000	Printed envelopes
A5 :00000000	Printed pages of A5 size paper
OTHER :00000000	Printed pages of other types of paper
PLTNRE:00000000	Total printed pages of plain, thin, and recycled paper
TKTRBD:00000000	Total printed pages of thick, ultra-thick, and bond paper
ENVTYP:00000000	Total printed pages of envelope, thick envelope, and thin envelope
LABEL:00000000	Printed labels
HAGAKI:00000000	Printed post cards
TTL_JAM:00000000	Total paper jams that have occurred
MP_JAM:00000000	Paper jams that have occurred in the MP tray
TR1_JAM:00000000	Paper jams that have occurred in paper tray 1
IN_JAM:00000000	Paper jams that have occurred in the machine
RE_JAM:00000000	Paper jams that have occurred at the ejecting section or back cover
DX_JAM:00000000	Paper jams that have occurred when duplex printing
TR2_JAM:00000000	Paper jams that have occurred in paper tray 2
POWER:00000375	Total power distribution time
PWRCNT:00000000	The number of times that the power is turned ON
MACERR_01:0000 *3	Machine error log (last ten errors)
KTN_CH:0000 *4	The number of times that the toner cartridge has been replaced
DRUM_CH:0000 *4	The number of times that the drum unit has been replaced
FUSR_CH:0000 *4	The number of times that the fuser unit has been replaced
LASR_CH:0000 *4	The number of times that the laser unit has been replaced
PFMP_CH:0000 *4	The number of times that MP paper feeding kit has been replaced
PFK1_CH:0000 *4	The number of times that paper feeding kit 1 has been replaced
PFK2_CH:0000 *4	The number of times that paper feeding kit 2 has been replaced
KTN_PG1:000000	Pages printed with the current toner cartridge
KTN_PG2:000000	Pages printed with the previous toner cartridge
ADSX_PG:00000000	The number of pages single-side scanned from ADF
ADDX_PG:00000000	The number of pages duplex scanned from ADF
FB_PG:000000	The number of pages scanned on the document scanner unit
ADSX_JAM:000000	The number of jams that occurred in single-side scanning from ADF
ADDX_JAM:000000	The number of jams that occurred in duplex scanning from ADF
COMERR1:	Communication error log (past three errors)
KDEV_BIAS:400V	Developing bias voltage value
ENGERR01:000000 *5	Engine error log (past ten errors)
HODN_ER:0000	The number of discharge errors

LCD *1	Description
FUSR_ER:0000	The number of fuser unit errors
MTLK_ER:0000	The number of laser unit polygon motor errors
DEVSTATUS__01:00 *6	Log for design analysis

*1 The serial number can be changed according to the steps below.

(1) While the serial number is displayed, press the [9], [4], [7], and [5] buttons in this order.
The cursor appears on the first digit of the serial number and edit mode is entered.

(2) Use the keypad to enter the first digit of the serial number. The cursor moves to the second digit. Enter the second digit to the 15th digit similarly.

<Entry method of alphanumeric characters>

See the table below and press the corresponding key until the desired character is displayed.

Keypad	Assigned characters
2	2 → A → B → C
3	3 → D → E → F
4	4 → G → H → I
5	5 → J → K → L
6	6 → M → N → O
7	7 → P → Q → R → S
8	8 → T → U → V
9	9 → W → X → Y → Z

(3) Press the [Start] button, and the new serial number is saved. The machine returns to the initial state of maintenance mode.

*2 Not displayed for models without Network.

*3 When the [OK] button is pressed while the machine error is displayed, the LCD changes to "PGCNT:*******". The total printed pages at the error occurrence is displayed for "*******".

*4 When the [OK] button is pressed while the number of times the part has been replaced is displayed, the LCD changes to "DATE_XX:*******". The abbreviation of each part is displayed for "XX" and the latest replacement date is displayed for "*******".

*5 When the [OK] button is pressed while the engine error is displayed, the LCD changes to "TM:***** BT: ***". The minutes that has passed from the previous error is displayed for "TM", and the number of times that the power is turned ON is displayed for "BT".

*6 When the [OK] button is pressed while this item is displayed, the LCD changes to "PGCNT:*******". The total printed pages at the error occurrence is displayed for "*******".

1.3.27 Display machine error code (function code: 82)

<Function>

This function is used to display the latest error code on the LCD.

<Operation Procedure>

(1) Press the [8] and [2] buttons in this order in the initial state of maintenance mode. "MACHINE ERR XXXX" is displayed on the LCD.

(2) When the [Stop/Exit] button is pressed, the machine returns to the initial state of maintenance mode.

1.3.28 Send communication log information to telephone line (function code: 87)

<Function>

This function is used to send the error list to service personnel at a remote service station when a fax communication problem has occurred in the user's machine. Receiving the error list allows the service personnel to analyze the problem current in the user's machine.

<Operation Procedure>

- Service side

(1) The service personnel connects the telephone line to the target user.

- User side

(2) While the machine is in the ready state, press the [Menu], [Start], [0], [8], and [7] buttons in this order. "SENDING P.01" is displayed on the LCD, and the error list is sent.

(3) When sending the error list is completed, the machine returns to the ready state.

1.3.29 Reset counters for periodic replacement parts (function code: 88)

<Function>

This function is used to reset the corresponding counter after the fuser unit, laser unit or any of the paper feeding kits is replaced. The number of times the part has been replaced is increased by one, and the warning message "Replace ***" is cleared.

<Operation Procedure>

(1) Press the [8] button twice in the initial state of maintenance mode. "Parts Replacement/ Reset-Laser Unit" is displayed on the LCD.

(2) Press the [▲] or [▼] button to display the part for which the counter is to be reset, and press the [Start] button.
The counters for the following parts must be reset after these parts are replaced:
- Laser Unit
- Fuser Unit
- PF Kit MP
- PF Kit T1
- PF Kit T2

When resetting the counter for the laser unit, for example, "Laser Unit OK?" is displayed on the LCD.

(3) Press the [Start] button. The corresponding counter is reset, and the machine returns to the initial state of maintenance mode.

1.3.30 Quit maintenance mode (function code: 99)

<Function>

This function is used to quit maintenance mode.

<Operation Procedure>

(1) Press the [9] button twice in the initial state of maintenance mode. The machine quits maintenance mode and returns to the ready state.

Confidential

2. OTHER SERVICE FUNCTIONS

2.1 Change ON/OFF Setting for Deep Sleep Mode

This function allows you to change the Deep Sleep mode setting to ON or OFF.

<Operation Procedure>

Non touch panel models

(1) While the machine is in the ready state, press the [Menu] button. Then press the [▲] or [▼] button to select "General Setup", and press the [OK] button.

(2) Press the [▲] or [▼] button to select "Ecology", and press the [OK] button.

(3) Press the [▲] or [▼] button to select "Sleep Time", and press the [OK] button.

(4) While "**Min" is displayed, press the [Start] and [Secure Print] buttons simultaneously.

(5) Press the [▲] or [▼] button to change the setting to On or Off, and press the [OK] button.

(6) The new setting is saved, and the LCD returns to the Sleep Time display.

Touch panel models

(1) While the machine is in the ready state, press the [Menu] button, and press "General Setup" on the LCD.

(2) Press "Ecology" on the LCD.

(3) Press "Sleep Time" on the LCD.

(4) Press the [Start] and [*] buttons simultaneously. "Deep Sleep/On/Off" is displayed on the LCD.

(5) Press [On] or [Off] on the LCD.

(6) The new setting is saved, and the LCD returns to the Sleep Time display.

Confidential

2.2 Reset Periodic Replacement Parts

This function is used to reset the corresponding counter after a periodic replacement part has been replaced correctly or to reset an error caused due to a consumable part being replaced by the user via an incorrect procedure.

<Operation Procedure>

Non touch panel models

(1) While the machine is in the ready state, press the [3] and [9] buttons simultaneously. The reset menu is displayed on the LCD.

(2) Press the [▲] or [▼] button to select the periodic replacement part for which the counter is to be reset, and press the [OK] button. "▲ 1.Reset ▼ 2.Exit" is displayed on the LCD.

(3) Press the [1] button. "Accepted" is displayed on the LCD and the machine returns to the ready state.

Touch panel models

(1) While the machine is in the ready state, press the [3] and [9] buttons simultaneously. The reset menu is displayed on the LCD.

(2) Press the [▲] or [▼] button to display the screen that contains the periodic replacement part for which you want to reset the counter, and press this part.

(3) Press [Yes] on the LCD. "Accepted" is displayed and the LCD returns to the reset menu display.

(4) Press the [Stop/Exit] button, and the machine returns to the ready state.

The counters for the following periodic replacement parts can be reset:

- Drum
- PF Kit MP
- PF Kit 1
- PF Kit 2
- Fuser
- Laser

2.3 Reset Developer Roller Counter

This function allows you to manually perform the same operation as when the toner cartridge is replaced with a new one. The purpose of this function is to provide an error resetting method in the event that the toner end display was not cleared because the new toner cartridge was not detected by the machine for any reason.

<Operation Procedure>

Non touch panel models

(1) Open the front cover.

(2) Press the [Clear] button.
"Replace Drum? 1.Yes 2.No" is displayed on the LCD.

(3) Reset the counter as described below depending on the type of toner.
Starter toner: Press the [*], [1] and [0] buttons in this order.
Standard toner: Press the [*], [1] and [1] buttons in this order.
High yield toner: Press the [*], [1] and [2] buttons in this order.
Super high yield toner: Press the [*], [1] and [3] buttons in this order.
When the type of toner is not clear: Press the [*], [0] and [0] buttons in this order.
(Regarded as the same type as the toner previously set.)
"Accepted" is displayed on the LCD, and the machine returns to the ready state.

(4) Close the front cover.

Touch panel models when "no toner" is not displayed

(1) Open the front cover.

(2) Press the [1] button.
"Reset Menu" is displayed on the LCD.
Press the [▲] or [▼] button to select the toner cartridge to be reset, and press the [OK] button.

(3) "Reset? Yes No" is displayed on the LCD. Press the [Yes] button.
"Accepted" is displayed on the LCD, and the machine returns to the ready state.

(4) Close the front cover.

Touch panel models when "no toner" is displayed

(1) Press the [Stop/Exit] button to return the LCD to the standby display.

(2) Open the front cover and then close it.

(3) While "Please Wait" is displayed on the LCD, open the front cover again.

(4) When "Cover is Open" is displayed on the LCD, press the [1] button. "Reset" is displayed on the LCD.
Press the [▲] or [▼] button to select the toner cartridge to be reset, and press the [OK] button.

(5) "Reset? Yes No" is displayed on the LCD. Press the [Yes] button.
"Accepted" is displayed on the LCD, and the machine returns to the ready state.

(6) Close the front cover.

2.4 Display ROM Version

This function is used to display the ROM version.

<Operation Procedure>

Non touch panel models

(1) While the machine is in the ready state, press the [#] and [*] buttons simultaneously. The main ROM version, ROM creation date and time, and check sum are displayed on the LCD.

(2) Press the [Start] or [▼] button. The PCLPS version is displayed on the LCD.

(3) Press the [Start] or [▼] button again. The I-FAX creation date and time and check sum are displayed on the LCD.

(4) Press the [Start] or [▼] button again. The LCD returns to the display in step (1).

(5) When the [Stop/Exit] button is pressed, the machine returns to the ready state.

Touch panel models

(1) While the machine is in the ready state, press the [#] and [*] buttons simultaneously. The ROM version, ROM creation date and time, check sum, PCLPS version, I-FAX creation date and time, and check sum are displayed on the LCD.

(2) When the [Stop/Exit] button is pressed, the machine returns to the ready state.

2.5 Perform Demo Printing

This function is used to print the Demo Data stored in the ROM.

<Operation Procedure>

Non touch panel models

Models with fax

(1) While the machine is in the ready state, press the [FAX] and [COPY] buttons simultaneously. Demo printing starts.

Models without fax

(1) While the machine is in the ready state, press the [▶] and [▼] buttons simultaneously. Demo printing starts.

Touch panel models

(1) While the machine is in the ready state, press and hold the [Home] button. Demo printing starts.

CHAPTER 6
WIRING DIAGRAM

CHAPTER 6 WIRING DIAGRAM

This chapter provides the wiring diagram for the connections of the PCBs.

CONTENTS

1. WIRING DIAGRAM 6-1

1. WIRING DIAGRAM

■ Wiring diagram

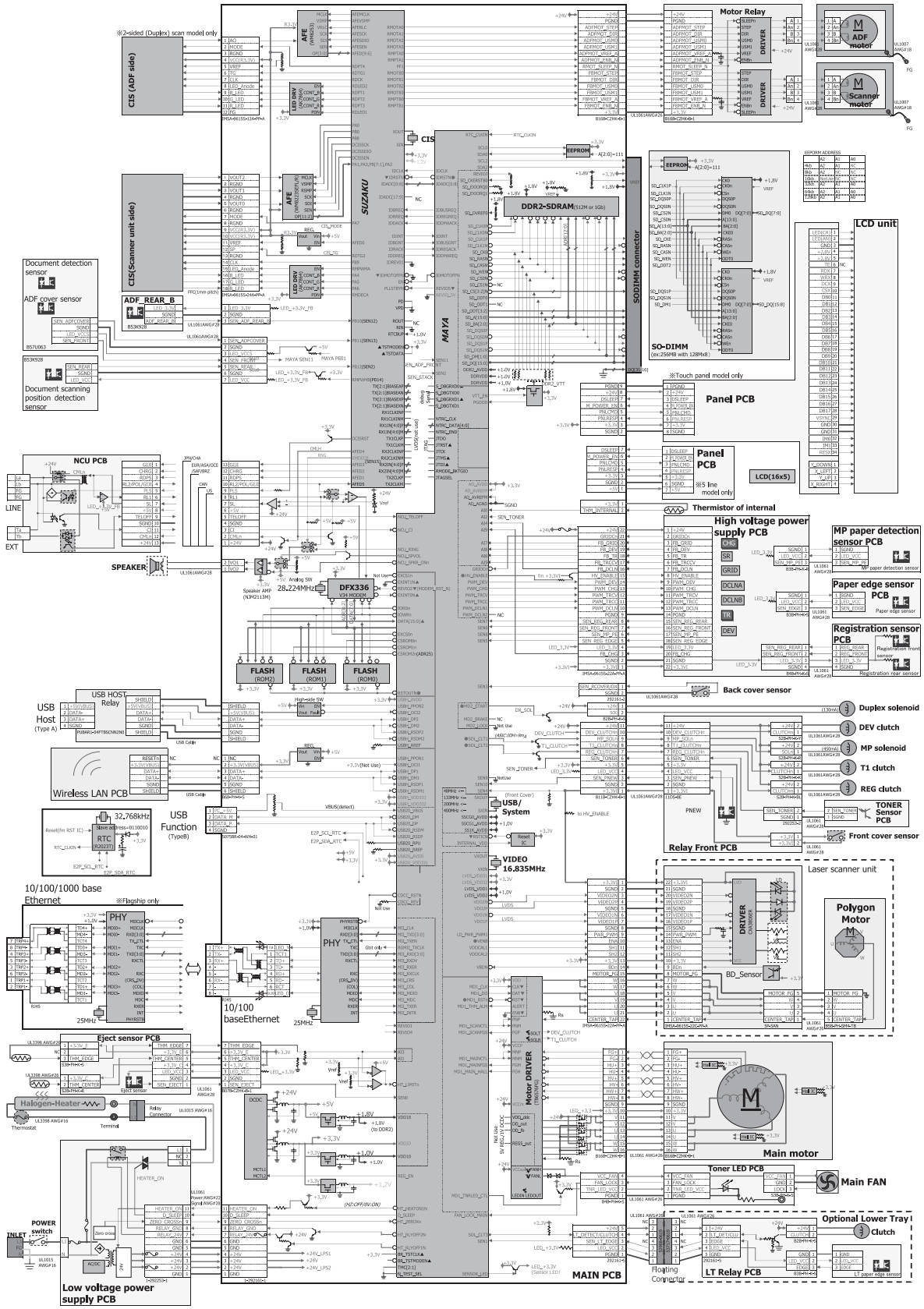

Confidential

CHAPTER 7

PERIODICAL MAINTENANCE

CHAPTER 7 PERIODICAL MAINTENANCE

CONTENTS

1. SAFETY PRECAUTIONS 7-1
2. PERIODICAL REPLACEMENT PARTS 7-2
   - 2.1 Preparation 7-2
   - 2.2 Fuser unit 7-3
   - 2.3 Laser unit 7-7
   - 2.4 MP paper feeding kit 7-14
   - 2.5 Paper feeding kit 1 7-15
   - 2.6 Paper feeding kit 2 7-17

1. SAFETY PRECAUTIONS

To avoid creating secondary problems by mishandling, follow the warnings and precautions below during maintenance work.

WARNING

Some parts inside the machine are extremely hot immediately after the machine is used. When opening the front cover ASSY or back cover to access any parts inside the machine, never touch the shaded parts shown in the following figures.

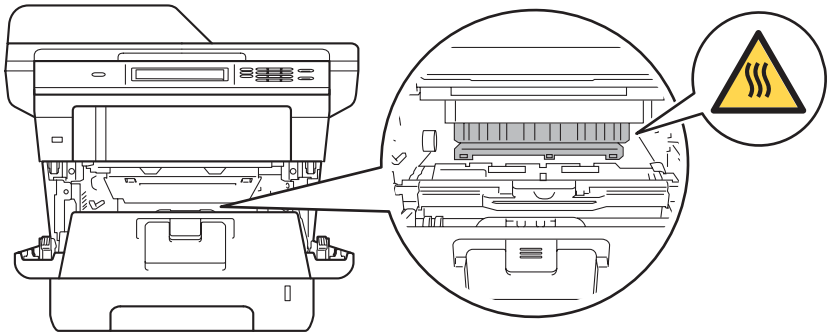

- Be careful not to lose screws, washers, or other parts removed.
- Be sure to apply grease to applicable positions specified in this chapter.
- When using soldering irons or other heat-generating tools, take care not to accidentally damage parts such as wires, PCBs and covers.
- Static electricity charged in your body may damage electronic parts. When transporting PCBs, be sure to wrap them in conductive sheets.
- When replacing the PCB and all the other related parts, put on a grounding wrist band and perform the job on a static mat. Also take care not to touch the conductor sections on the flat cables or on the wire harness.
- After disconnecting flat cables, check that each cable is not damaged at its end or shortcircuited.
- When connecting flat cables, do not insert them at an angle. After insertion, check that the cables are not at an angle.
- When connecting or disconnecting harnesses, hold the connector body, not the cables. If the connector is locked, release it first.
- After a repair, check not only the repaired portion but also harness treatment. Also check that other related portions are functioning properly.
- Violently closing the joint cover without mounting the toner cartridge and the drum unit can damage the machine.
- After assembly, it is recommended to conduct dielectric strength test and continuity test.

2. PERIODICAL REPLACEMENT PARTS

2.1 Preparation

Prior to proceeding with the disassembly procedure,

(1) Disconnect the following:
- AC cord
- USB cable (if connected)
- LAN cable (if connected)
- Line cord (if connected)

(2) Remove the following:
- Paper tray 1
- Toner cartridge and drum unit
- Duplex tray
- LAN port cap

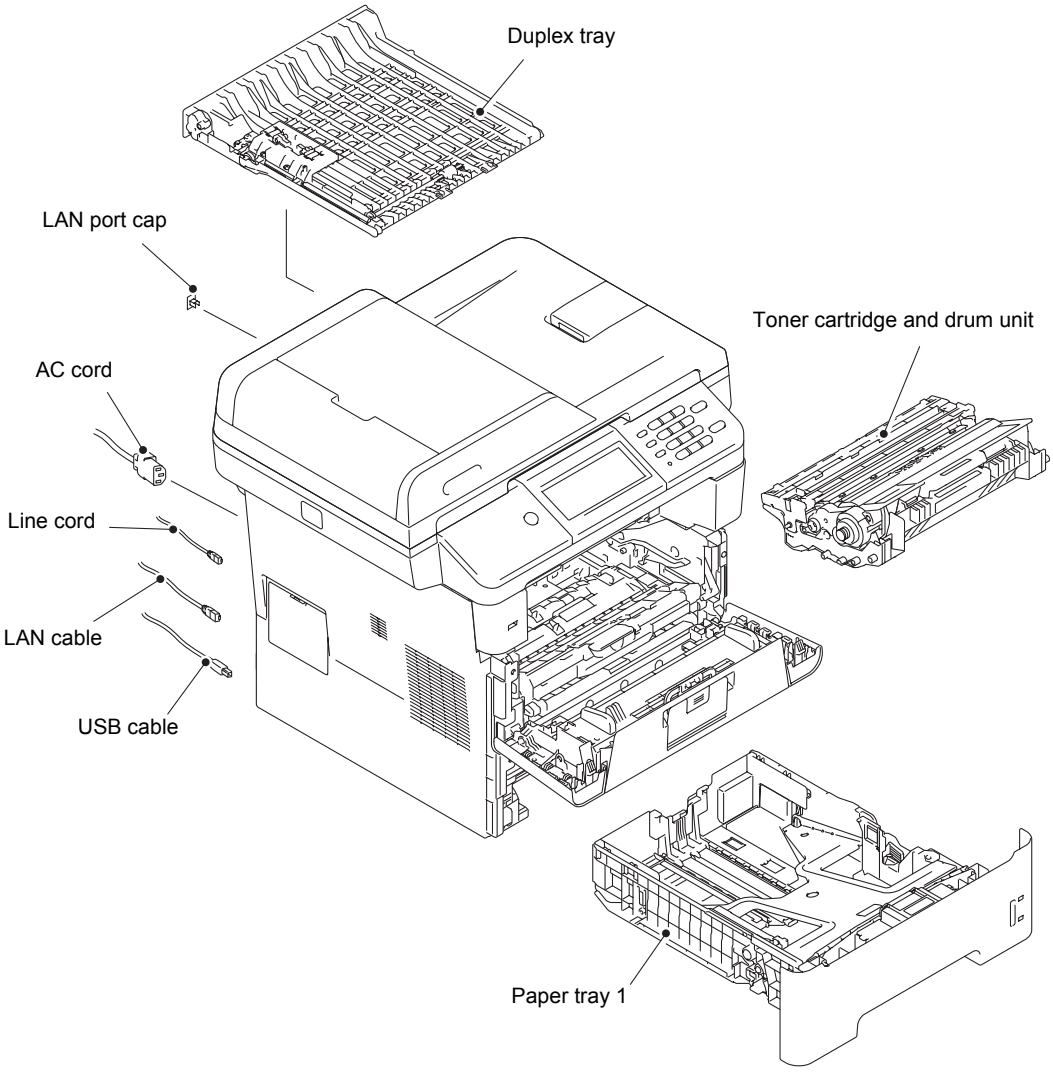

Fig. 7-1

2.2 Fuser unit

(1) Open the back cover.

(2) Push both ribs of the back cover in the direction of the arrows, and remove the two bosses on the outer chute.

Note:
- Be careful not to damage the ribs inside the back cover.

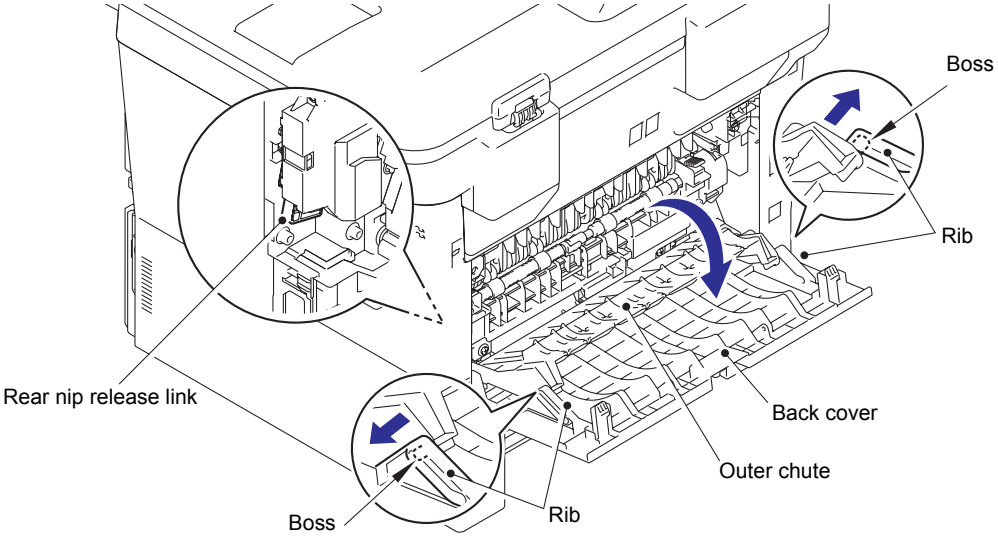

Fig. 7-2

Assembling Note:
- When attaching the back cover, open the front cover and attach the back cover while lifting the rear nip release link.

(3) Remove the back cover from boss A on the machine, and remove the back cover from the machine.

(4) Open the outer chute approximately 80 degrees. Remove the outer chute from boss B on the right side of the machine, and remove the outer chute from the machine in the direction of the arrow.

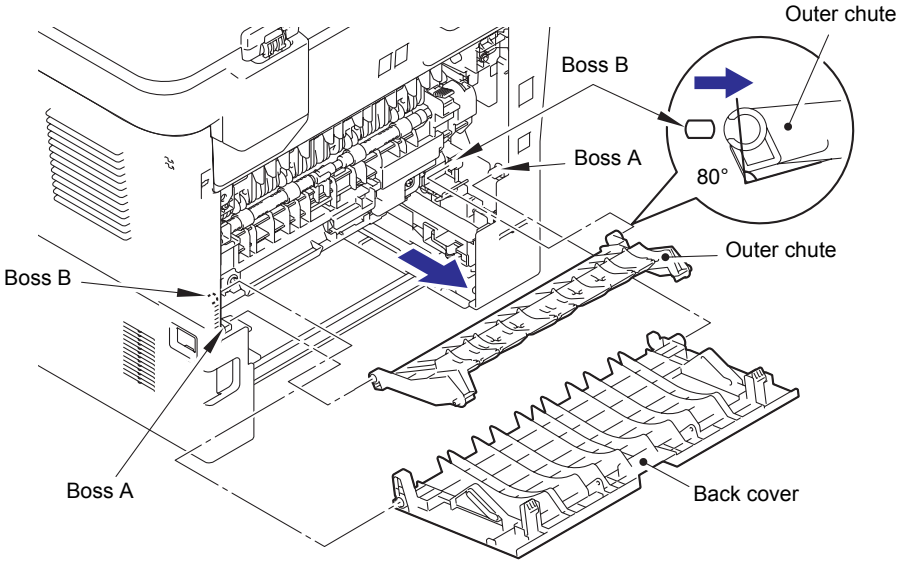

Fig. 7-3

Confidential

(5) Push the two knobs on the fuser cover, and pull the fuser cover down in the direction of the arrow.

(6) Remove the fuser cover from the bosses on the fuser unit, and remove the fuser cover from the machine.

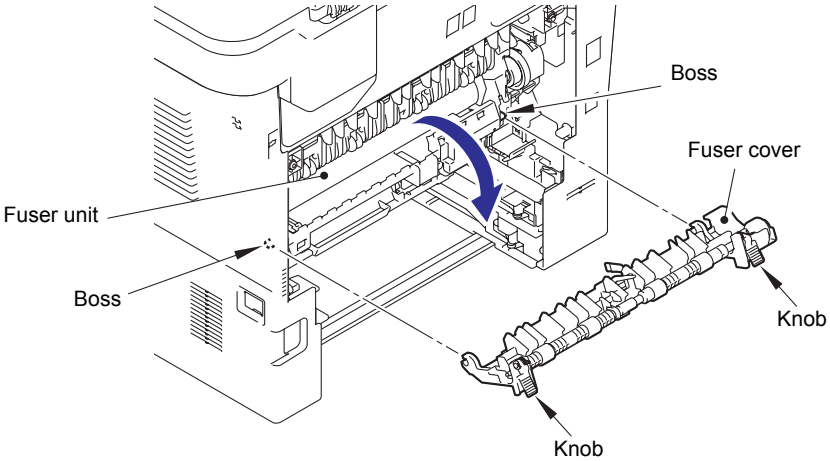

Fig. 7-4

(7) Remove the taptite bind B M4x12 screw, and release the hook to remove the fuser unit line cover R from the machine.

(8) Remove the rear nip release link from the machine.

Note:

- Make sure that the front cover is open when removing the rear nip release link.

(9) Remove the taptite pan B M4x14 screw, and release the hook to remove the fuser unit line cover L from the machine.

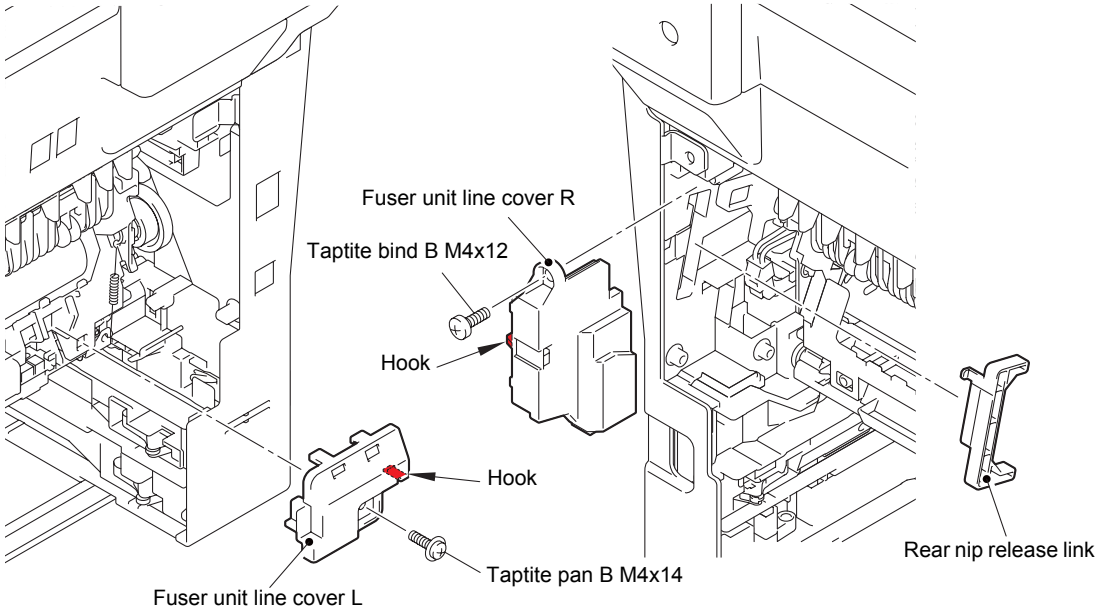

Fig. 7-5

(10) Release the heater harness of the fuser unit from the guide on the main frame R, and disconnect the heater harness from the low-voltage-heater harness.

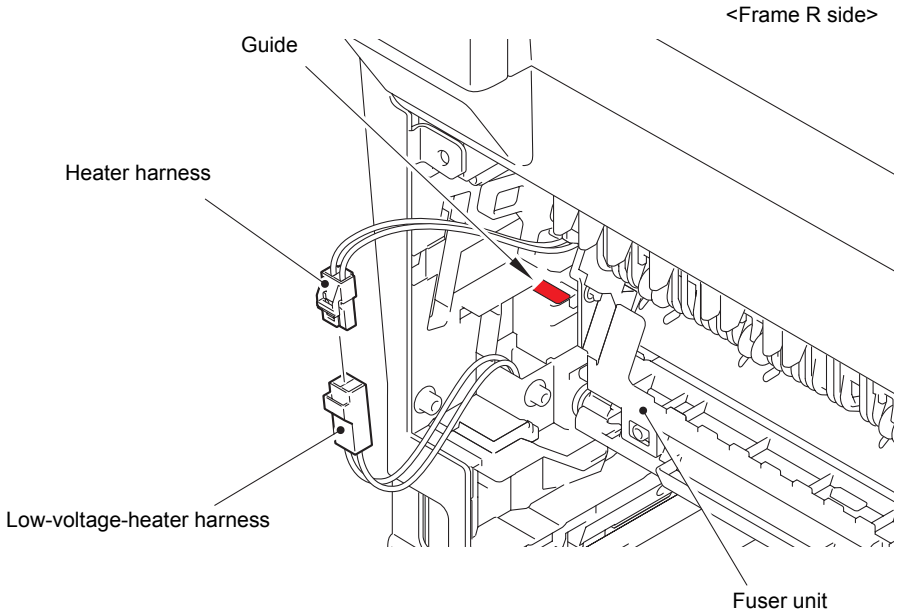

Fig. 7-6

Harness routing: Refer to "3.Fuser unit".

(11) Remove the fuser unit earth spring from the fuser unit.

(12) Release the center thermistor harness and the side thermistor harness of the fuser unit from the guide, and disconnect these harnesses from the eject sensor PCB ASSY.

Note:

- When disconnecting the harness, hold the top of the PCB connector to prevent the PCB connector being damaged.

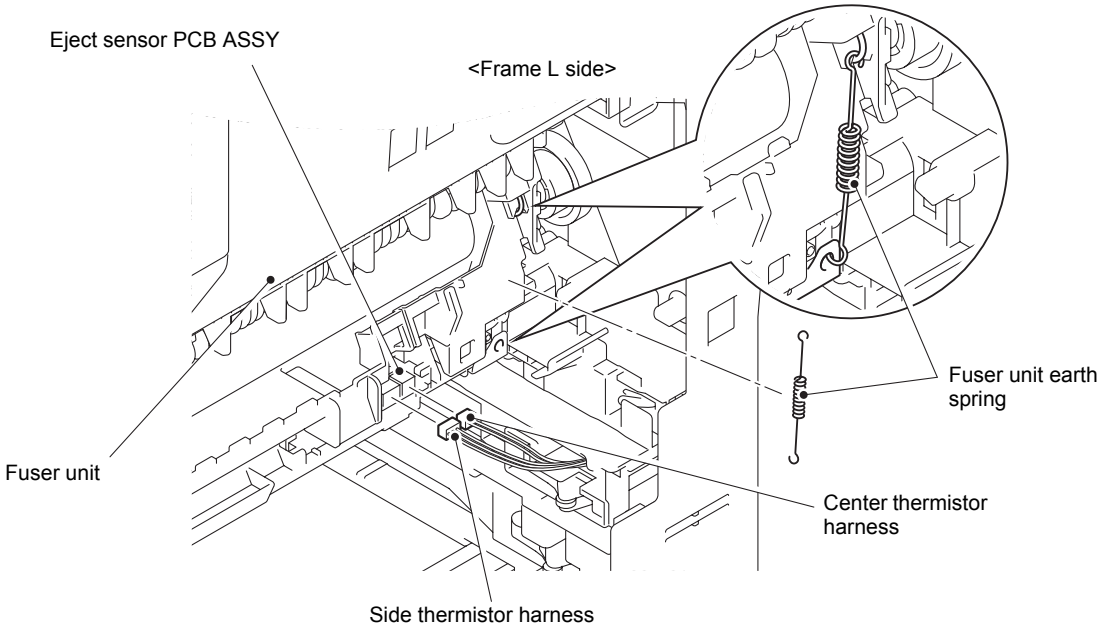

Fig. 7-7

Harness routing: Refer to "3.Fuser unit".

(13) Remove the taptite pan B M4x14 screw, and remove the fuser unit from the machine.

Note:

- Make sure that the front cover is closed when removing the fuser unit.

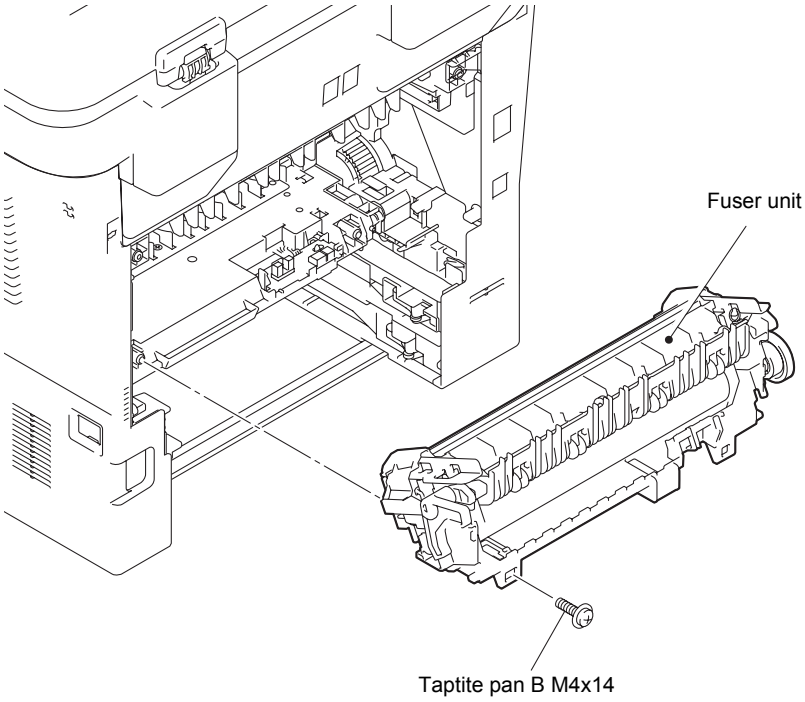

Fig. 7-8

Confidential

2.3 Laser unit

(1) Open the back cover.

(2) Remove the two taptite bind B M4x12 screws from the back side of the side cover L and the side cover R ASSY.

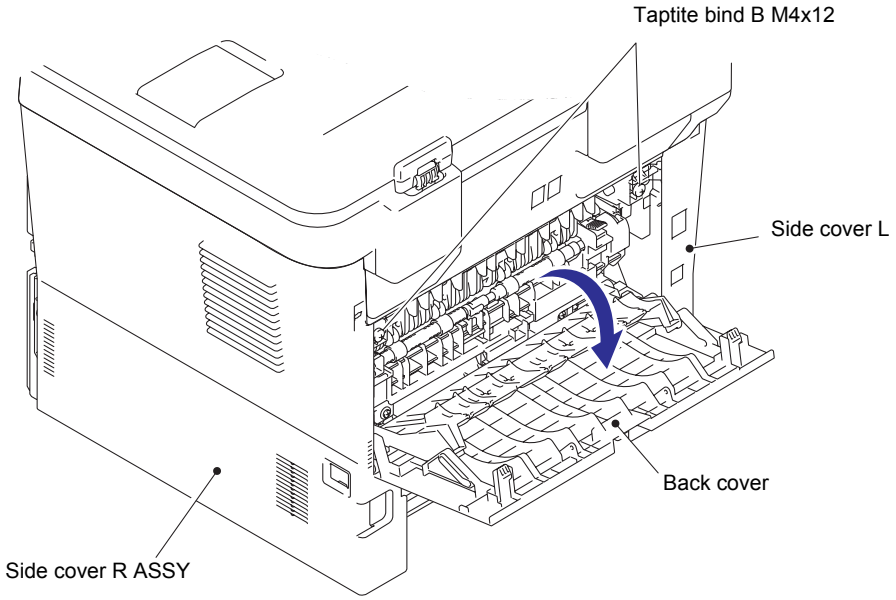

Fig. 7-9

(3) Remove the two taptite bind B M4x12 screws from the front side of the side cover L and the side cover R ASSY.

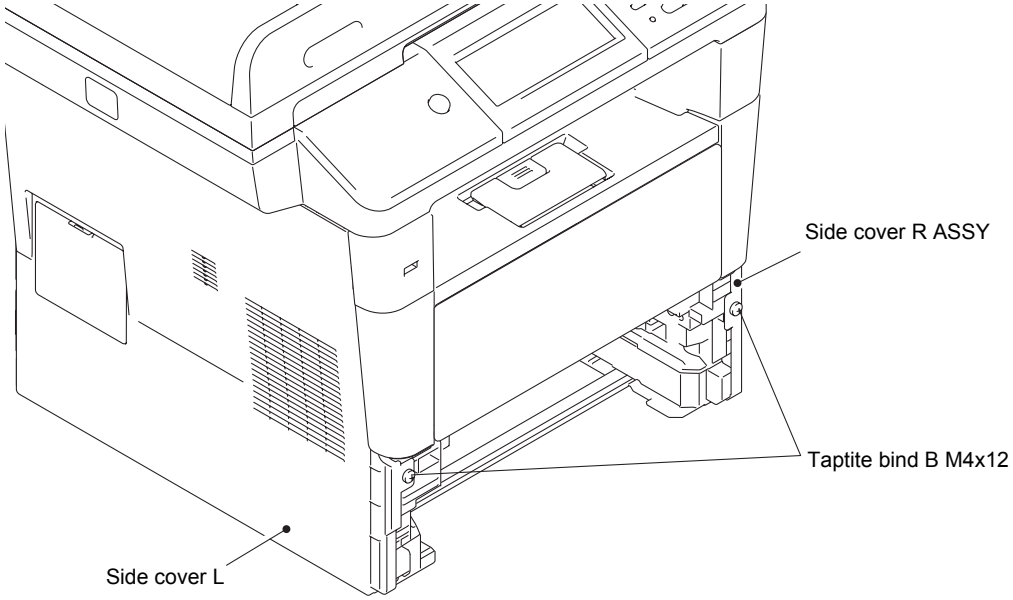

Fig. 7-10

(4) Push the front cover release button, and open the front cover ASSY.

(5) Release the eight hooks, and remove the side cover L from the machine.

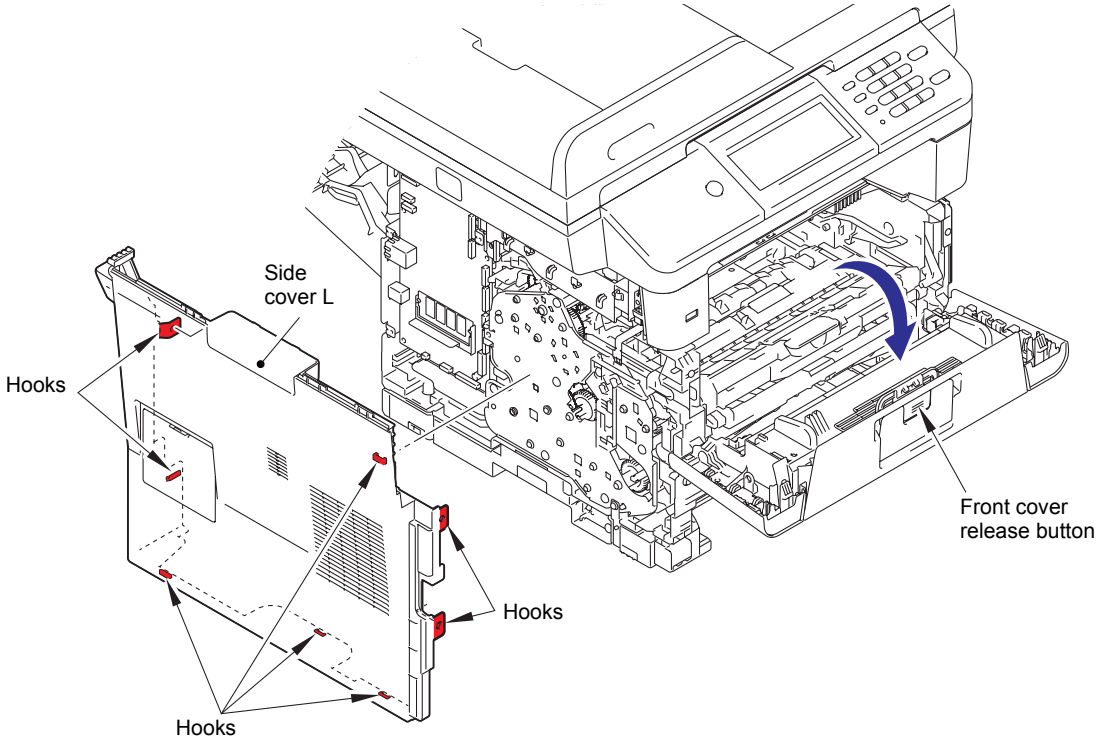

Fig. 7-11

(6) Release the nine hooks, and remove the side cover R ASSY from the machine.

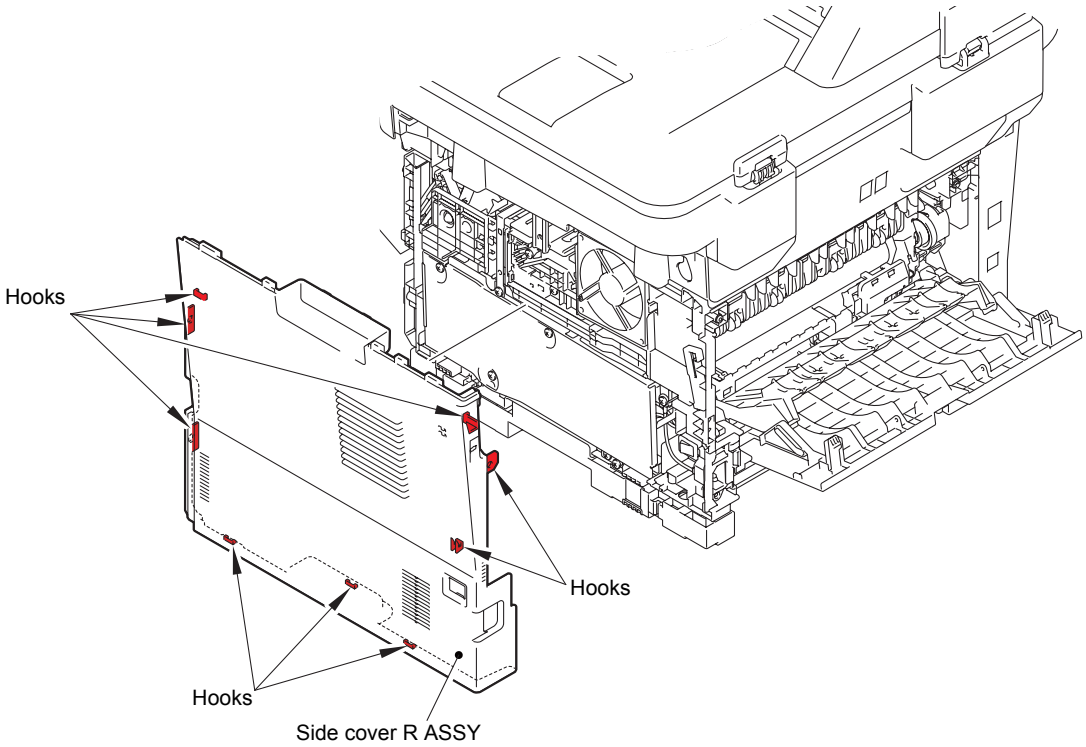

Fig. 7-12

(7) Remove the four taptite cup S M3x8 SR screws to remove the ADF earth harness, document scanner earth harness, and main shield cover plate from the machine.
The main shield cover plate is not provided for models with a tray capacity of 500 sheets. Therefore, remove the screw securing the ADF earth harness, the screw securing the document scanner earth harness, and screw A.

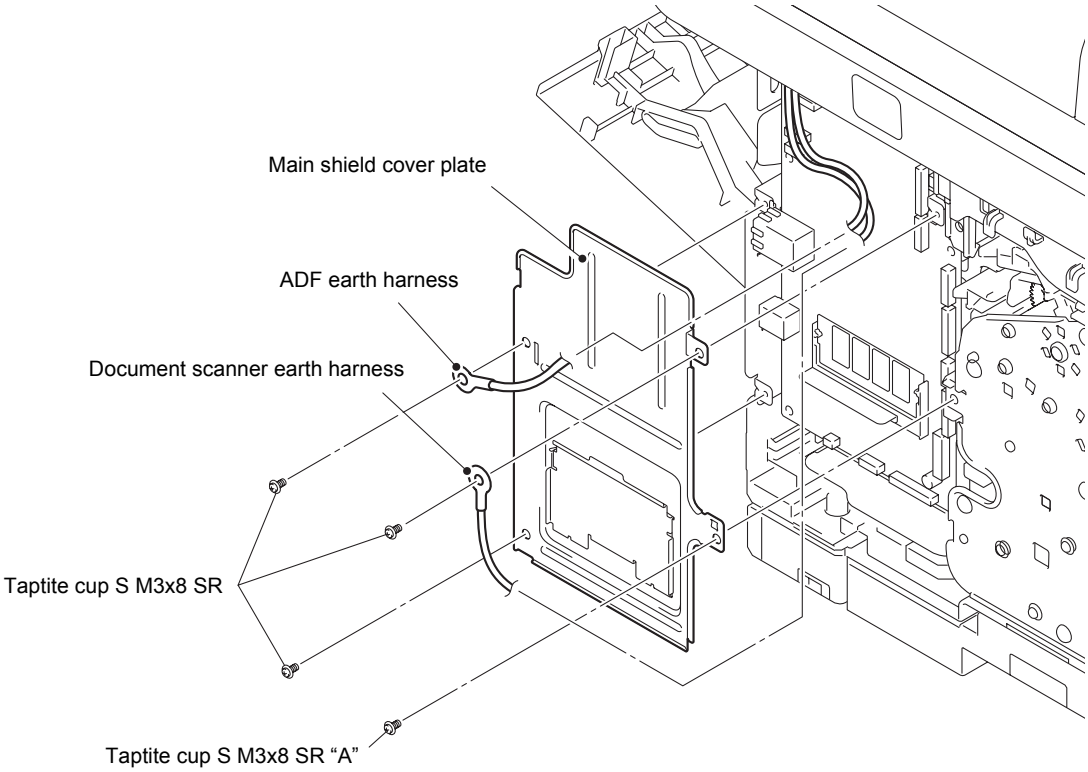

Fig. 7-13

Harness routing: Refer to "1.Main PCB ASSY".

(8) Disconnect the second side CIS flat cable (duplex scanning models only), first side CIS flat cable, ADF cover/document detection sensor harness, second side document scanning position sensor harness, ADF motor harness, document scanner motor harness, panel PCB harness, wireless LAN harness (models with wireless LAN only), USB host harness, speaker harness (models with speaker only), and NCU harness (models with NCU only) from the main PCB ASSY, and release these harnesses from the securing fixtures.

Note:

- The second side CIS flat cable and the second side document scanning position sensor harness are provided for duplex scanning models only.

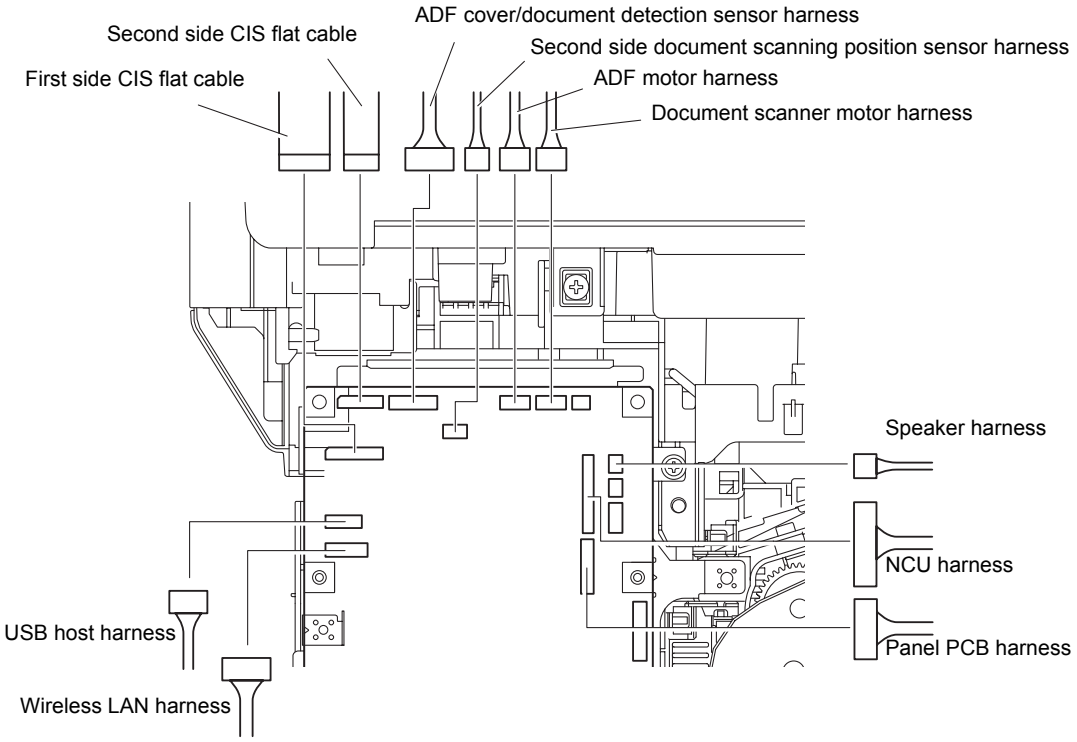

Fig. 7-14

(9) Pull out the wireless LAN harness and the USB host harness from the main PCB shield calking ASSY.

(10) Remove the screw pan (S/P washer) M3.5x6 DA screw to release the NCU earth harness, and remove the NCU earth harness from the guide on the machine.

(11) Remove the four taptite bind B M4x12 screws and the taptite cup S M3x8 SR screw.

(12) Release the six hooks, and slide the joint cover in the direction of the arrow to remove it from the machine.

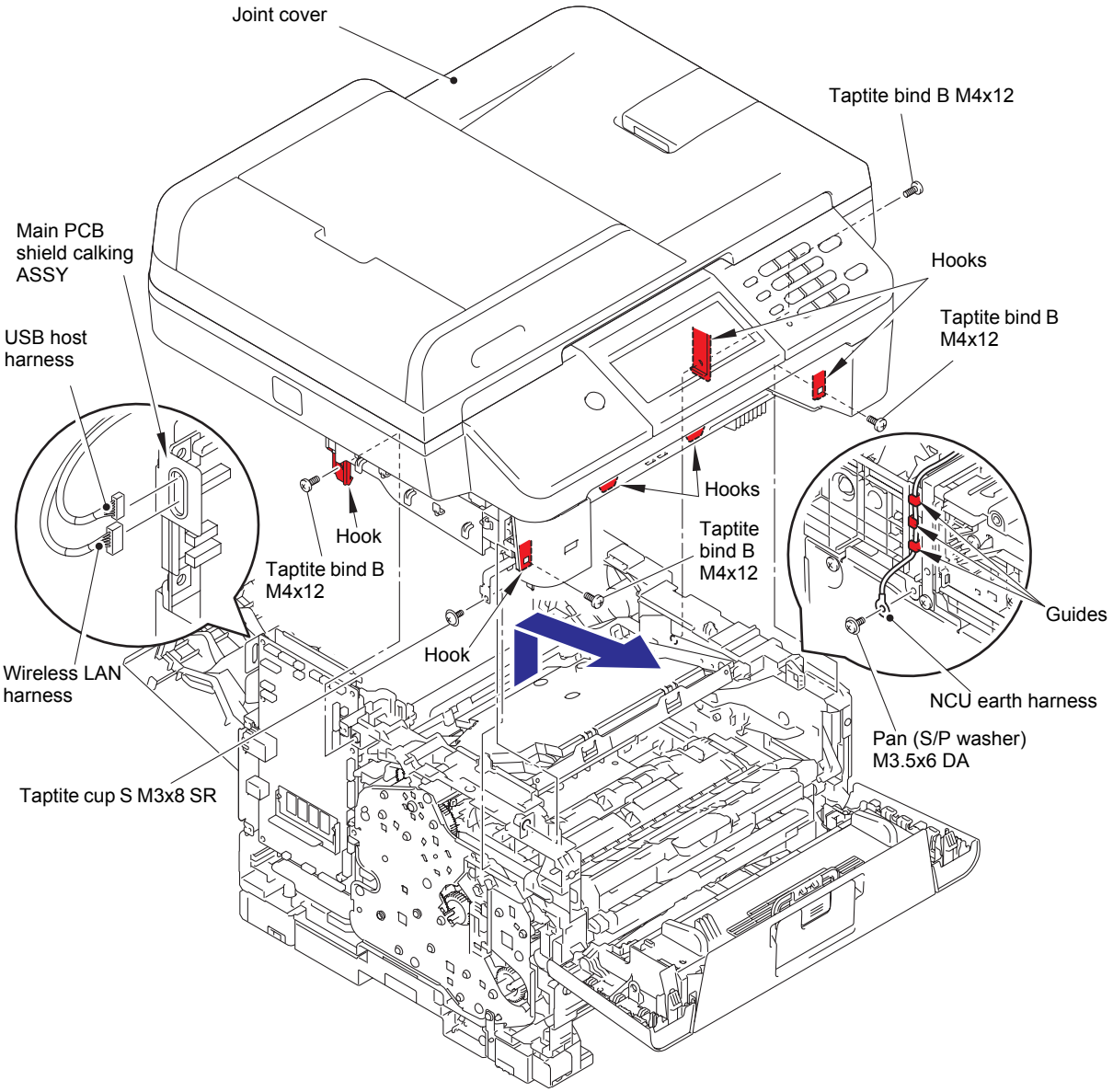

Fig. 7-15

(13) Disconnect the laser unit flat cable from the laser unit.

(14) Remove the four taptite cup S M3x8 SR screws, and remove the laser unit from the machine.

Note:

- Be careful not to touch the lens of the laser unit.

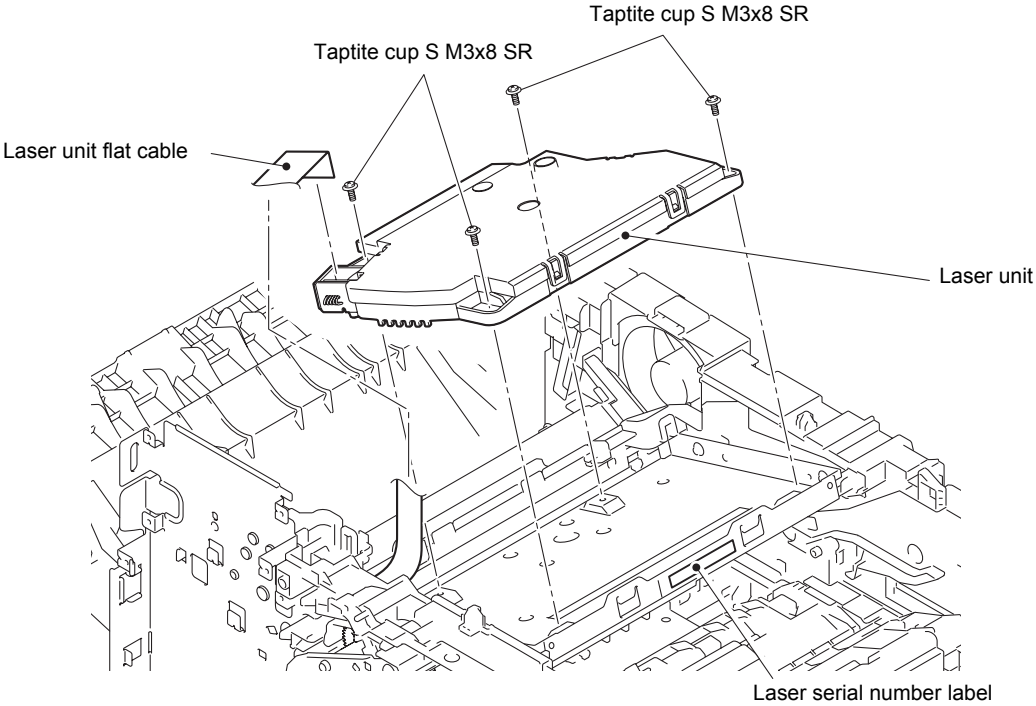

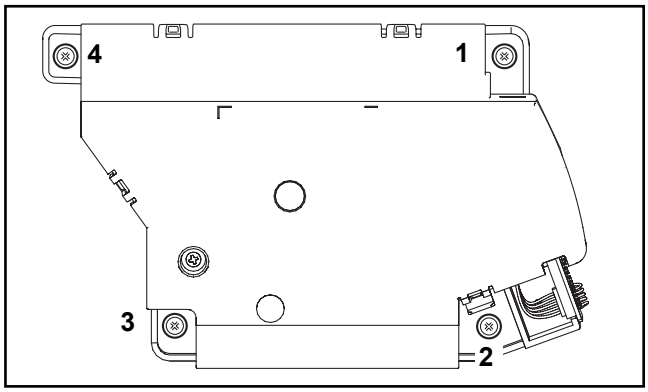

Fig. 7-16

Harness routing: Refer to “1.Main PCB ASSY” and “6.Laser unit”.

Assembling Note:

- When attaching the laser unit, tighten the screws in the following order: upper right, lower right, lower left and upper left.
- When connecting the flat cable(s), insert it straight. After insertion, check that the cable is not at an angle.

Confidential

Assembling Note:

- There are two types of laser unit that can be ordered as a spare part.
  (SJ type and SM type)
  When replacing the laser unit, be sure to order and assemble the same type of the laser unit that was attached to the machine.

<How to identify the type of laser unit and the position of label>

Check the first two characters of the laser serial number label.

- SJ type : SJxxxxxxVXXYY
- SM type: SMxxxxxxVXXYY

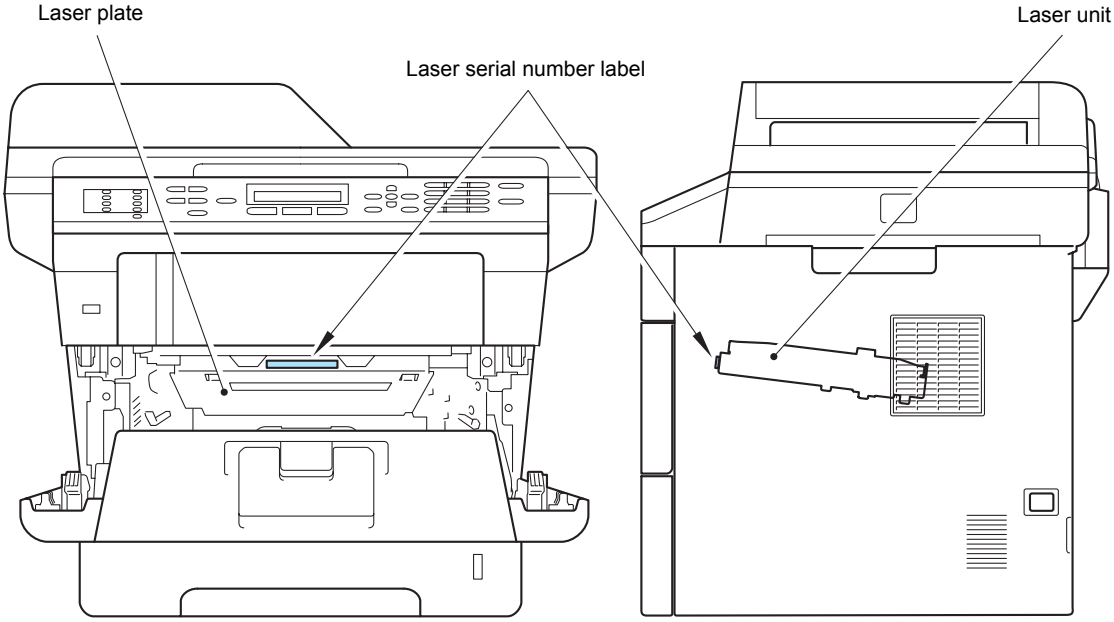

Fig. 7-17

Assembling Note:

- Attach the laser serial number label as shown in the figure (on laser plate) above after replacing the laser unit.

2.4 MP paper feeding kit

(1) Push the front cover release button, and open the front cover ASSY.

(2) Open the MP roller cover. Release the hook on the MP holder bushing, and slide the MP holder bushing in the direction of arrow 2 to remove it from the machine.

(3) Slide the MP roller holder ASSY in the direction of arrow 3 to remove it from the MP separation roller shaft. Then remove the MP roller holder ASSY from the machine.

(4) Raise the MP separation pad ASSY to the 50-degree position, and remove it from the machine in the direction of arrow 4.

(5) Bend the MP separation pad spring inward to remove it from the machine.

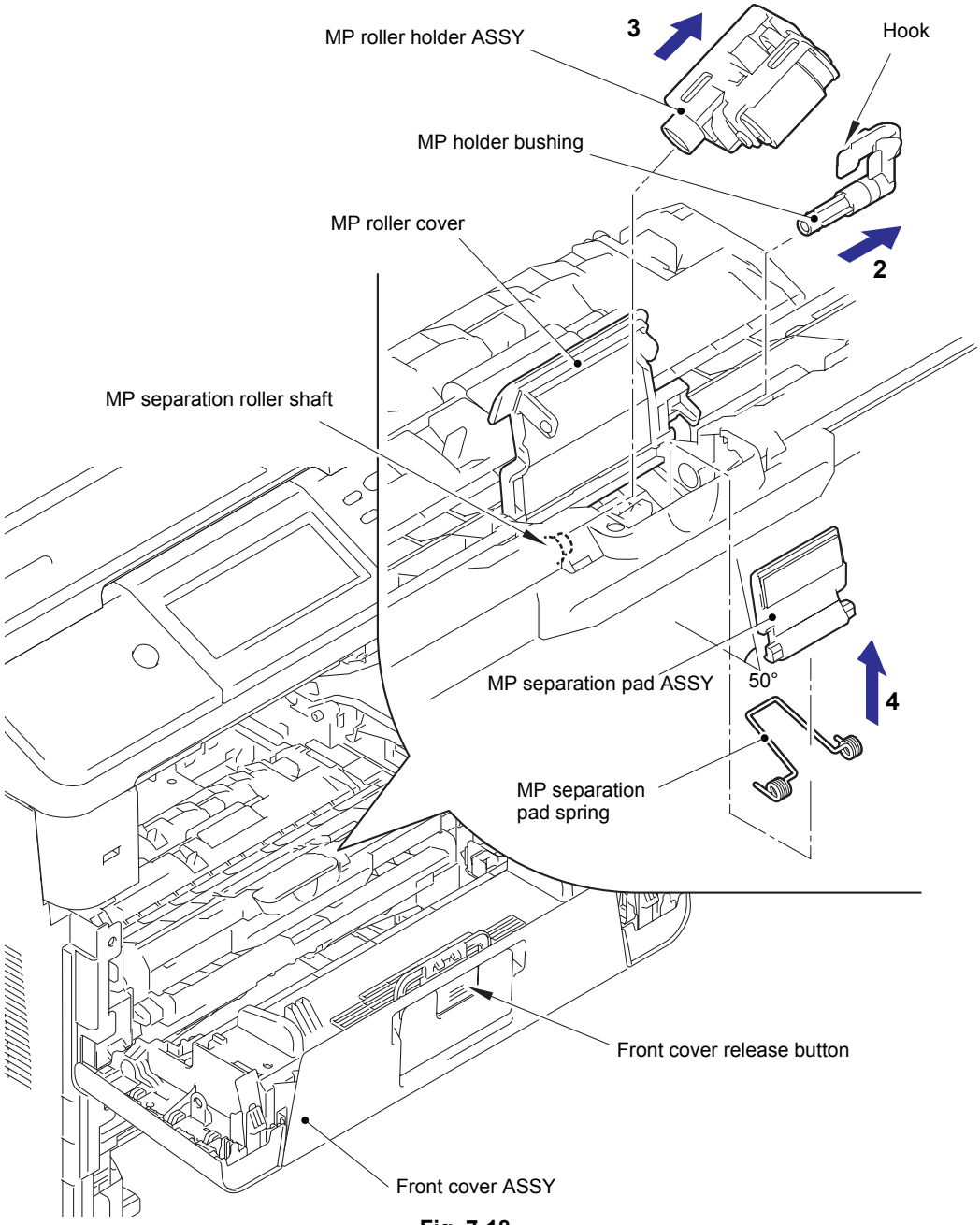

Fig. 7-18

Assembling Note:

- Attach the MP roller holder ASSY while pushing the MP separation pad ASSY.

2.5 Paper feeding kit 1

Note:

- Paper tray 1 (250 sheets, 500 sheets): T1, Paper tray 2 (500 sheets): T2
- The illustration shows paper tray 1 (250 sheets).

(1) Remove the two taptite bind B M4x12 screws from the paper tray 1.

(2) Lift the plate to remove "A" on the T1 tray indicator from the plate, remove the four bosses, and then remove the T1 tray cover from the paper tray 1.

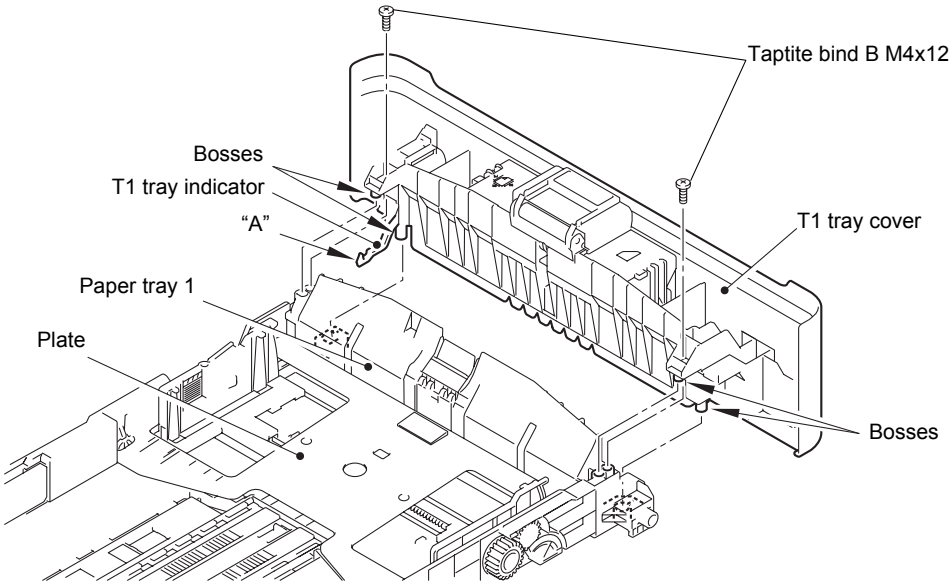

Fig. 7-19

(3) Release the two hooks on the T1 separation pad ASSY from the paper tray 1.

(4) Push both arms of the T1 separation pad ASSY in the direction of the arrows to remove both pins, and then remove the T1 separation pad ASSY from the paper tray 1.

(5) Remove the T1 separation pad spring from the T1 separation pad ASSY.

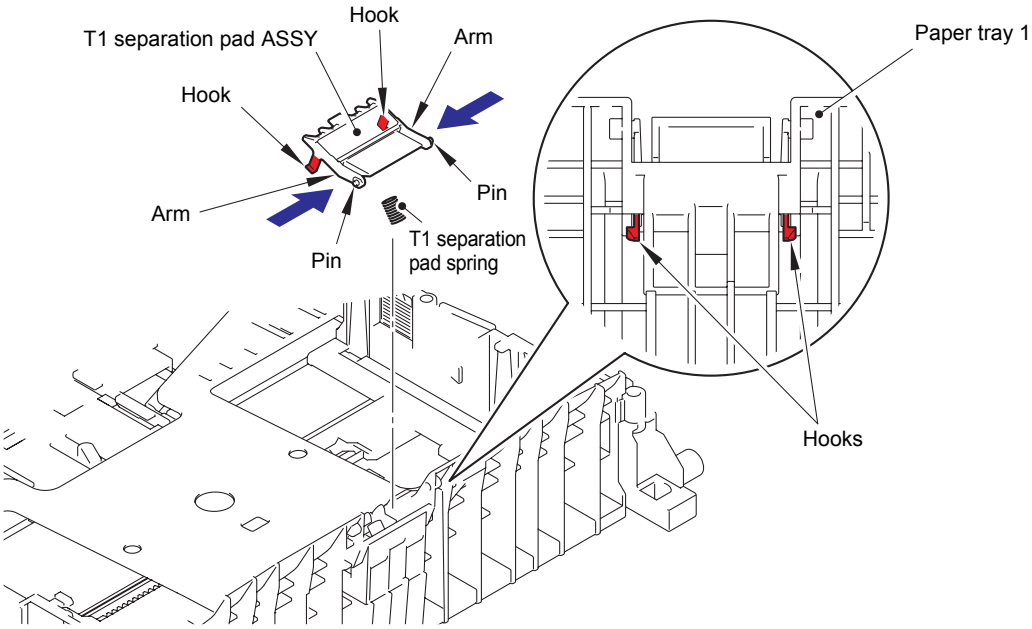

Fig. 7-20

Confidential

(6) Push the T1 lift arm in the direction of arrow 6, and remove the boss on the T1 roller holder ASSY from the T1 lift arm.

(7) Turn the T1 roller holder ASSY in the direction of arrow 7a, and slide it in the direction of arrow 7b to remove it from the T1 separation roller shaft. Then remove the T1 roller holder ASSY from the machine.

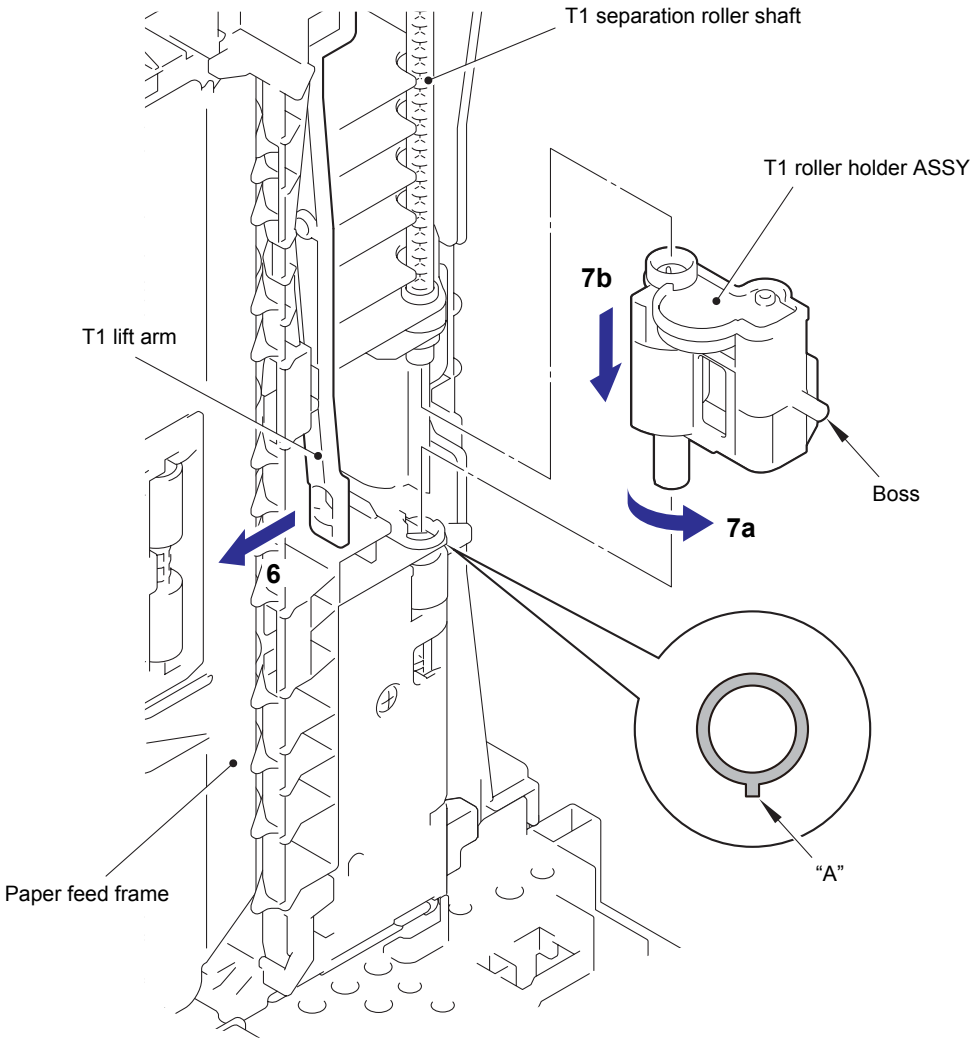

Fig. 7-21

Assembling Note:

- When attaching the T1 roller holder ASSY, engage "A" on the shaft of the T1 roller holder ASSY with the hole on the paper feed frame, and insert the shaft into the hole.

2.6 Paper feeding kit 2

(1) Remove the two taptite bind B M4x12 screws from the paper tray 2.

(2) Lift the plate to remove "A" on the T2 tray indicator from the plate, remove the four bosses, and then remove the T2 tray cover ASSY from the paper tray 2.

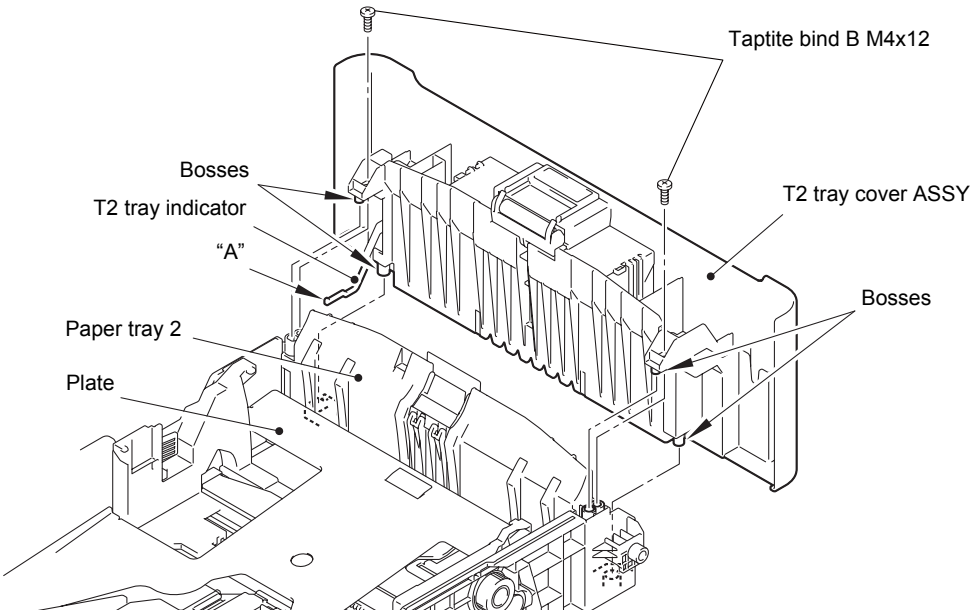

Fig. 7-22

(3) Release the two hooks on the T2 separation pad ASSY from the paper tray 2.

(4) Push both arms of the T2 separation pad ASSY in the direction of the arrows to remove both pins, and then remove the T2 separation pad ASSY from the paper tray 2.

(5) Remove the T2 separation pad spring from the T2 separation pad ASSY.

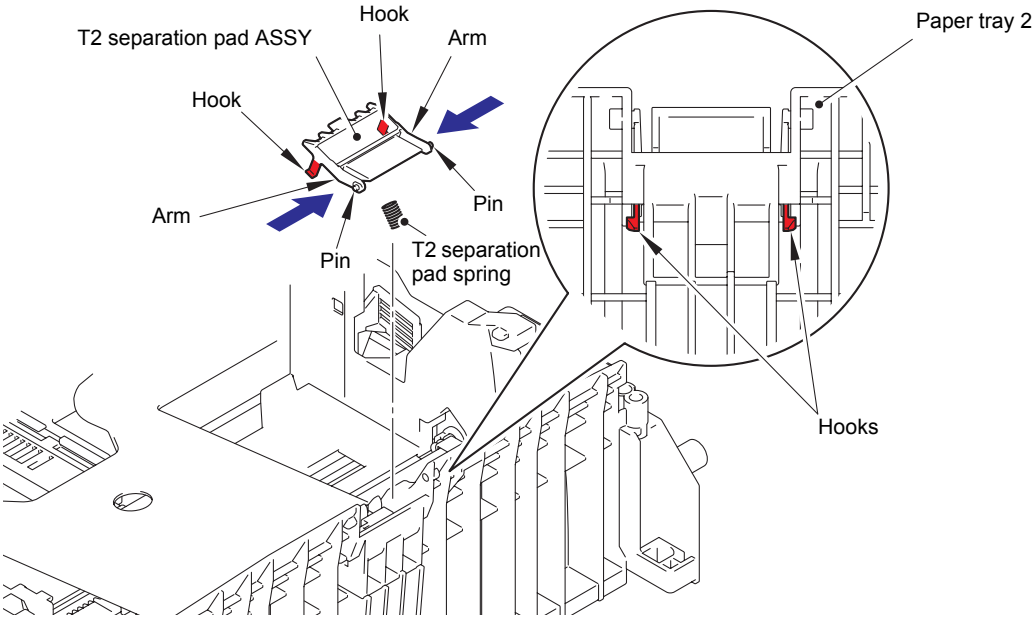

Fig. 7-23

Confidential

(6) Push the T2 lift arm in the direction of arrow 6a, and remove the boss on the T2 roller holder ASSY from the T2 lift arm. Then turn the T2 roller holder ASSY in the direction of arrow 6b.

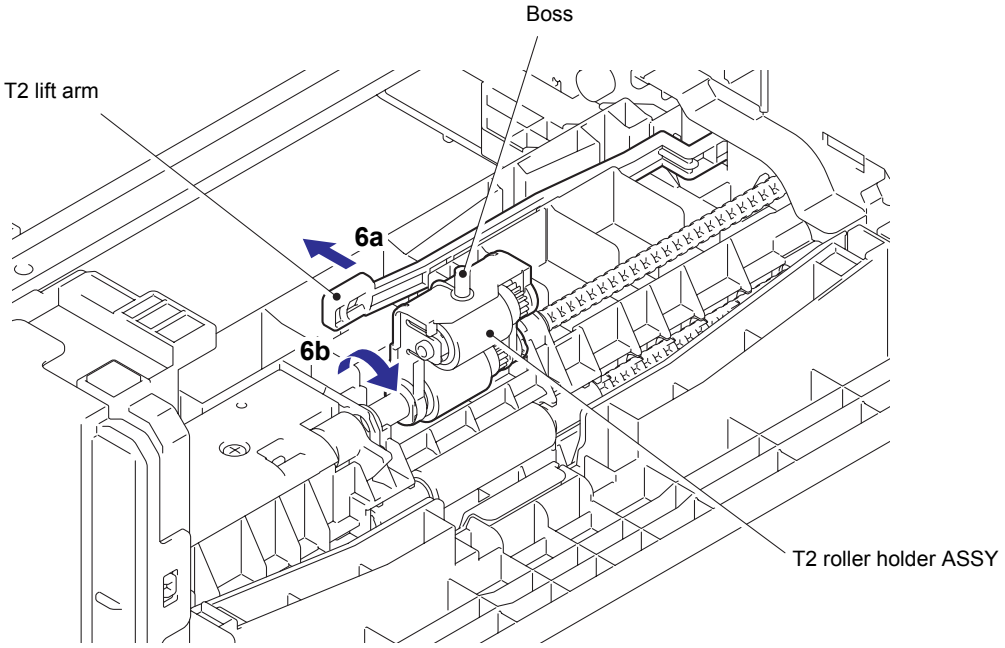

Fig. 7-24

(7) Slide the T2 roller holder ASSY in the direction of arrow 7 to remove it from the T2 separation roller shaft.

(8) Lift the right side of the T2 roller holder ASSY in the direction of arrow 8a, and pull the T2 roller holder ASSY in the direction of arrow 8b to remove it from the LT unit.

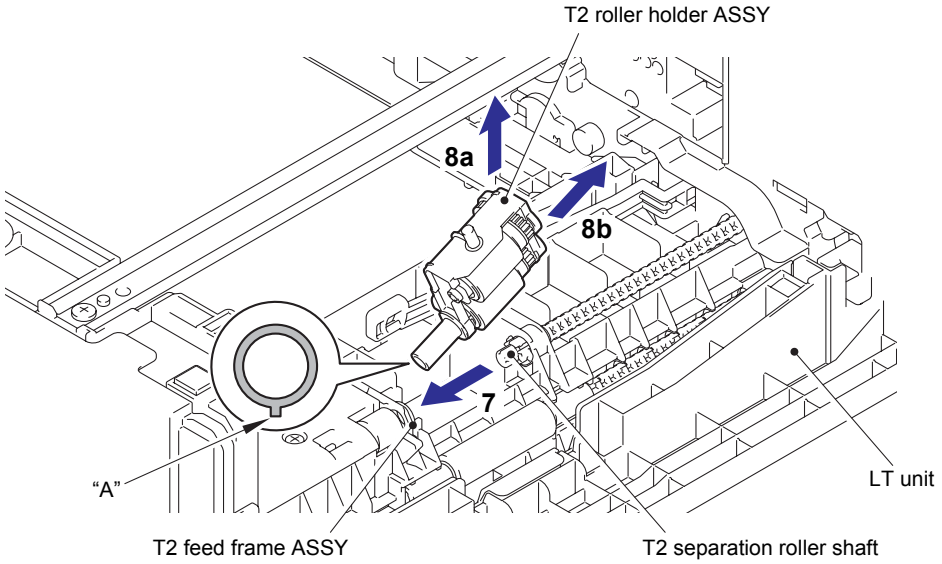

Fig. 7-25

Assembling Note:

- When attaching the T2 roller holder ASSY, engage "A" on the shaft of the T2 roller holder ASSY with the hole on the T2 feed frame ASSY, and insert the shaft into the hole.

APPENDIX 1
SERIAL NUMBERING SYSTEM

APPENDIX 1 SERIAL NUMBERING SYSTEM

■ Serial number label (1 location)

<How to Read>

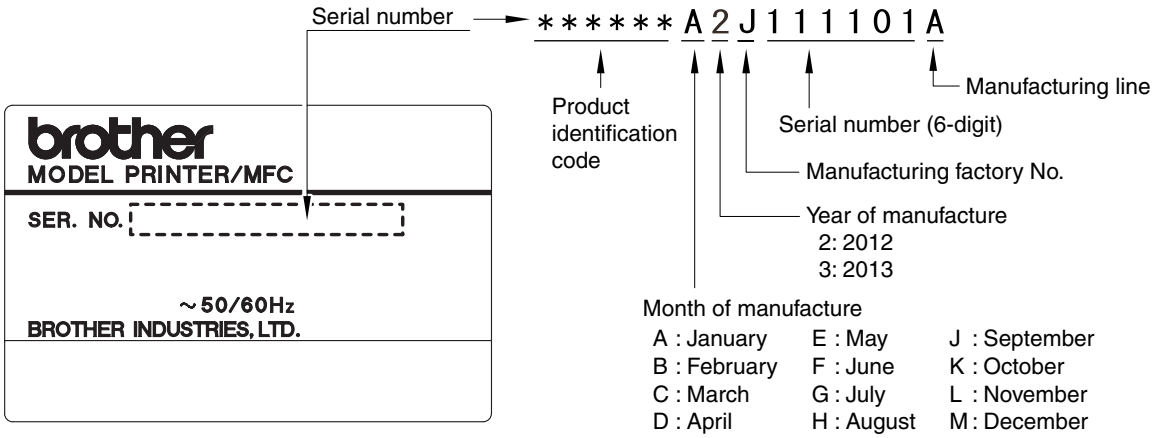

Fig. App. 1-1

<Location>

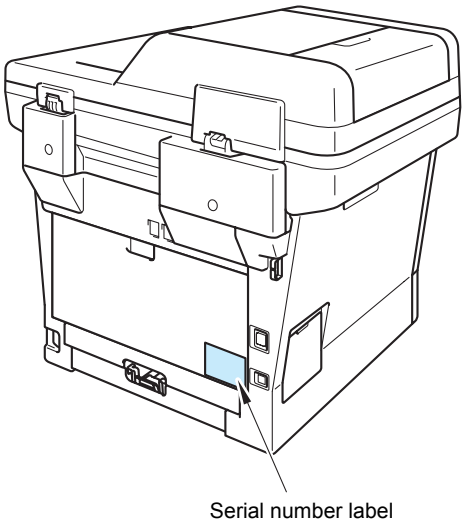

Fig. App. 1-2

Confidential

APPENDIX 2
DELETING USER SETTING INFORMATION

This appendix provides instructions on how to delete user setting information recorded in the machine.

APPENDIX 2 DELETING USER SETTING INFORMATION

The user setting information for the machine is stored in the main PCB. You can delete user setting information following the procedure below.

<Operating Procedure>

(1) Press the [Menu] button.

(2) Press the [▲] or [▼] button to display the "Initial Setup" or "General Setup" on the LCD, and press the [OK] button.

(3) Press the [▲] or [▼] button to display the "Reset" on the LCD, and press the [OK] button.

(4) Press the [▲] or [▼] button to display the "All Settings" on the LCD, and press the [OK] button.

(5) "1. Reset 2. Exit" or "Yes / No" is displayed on the LCD.
When "1. Reset 2. Exit" is displayed, press the [1] button.
When "Yes / No" is displayed, press [Yes].

(6) When completed, the machine returns to the ready state.

Confidential

APPENDIX 3
INSTALLING MAINTENANCE DRIVER

APPENDIX 3 INSTALLING MAINTENANCE DRIVER

To identify multiple terminals connected to the computer via USB, the computer needs to configure the corresponding number of virtual USB devices using a driver or software. If you connect multiple machines to your computer, the same number of virtual USB devices will be automatically configured on your computer. To prevent an unlimited number of virtual USB devices from being configured, use the unique driver installation procedure described below to enable your computer to identify multiple terminals via one single virtual USB device.

<Operating Procedure>

(1) Check that the power switch of the machine is OFF. When the machine is connected to the computer, disconnect the USB cable.

(2) Turn ON the power switch of the computer.

(3) Enter maintenance mode.

(4) Double-click "maintenance.exe" for the maintenance driver stored in the temporary folder to execute it.

(5) The Device Driver Installation Wizard startup window appears. Click [Next].

(6) The WHQL alert window appears three times. Click [Continue Anyway] on each window to continue installation.

(7) The Device Driver Installation Wizard completion window appears. Click [Finish].

(8) Connect the machine to your computer using the USB cable.

(9) The Found New Hardware Wizard startup window appears. Select "Install the software automatically" and click [Next].

(10) The WHQL alert window appears. Click [Continue Anyway].

(11) When the driver is installed successfully, the Found New Hardware Wizard completion window appears. Click [Finish].

(12) Repeat steps (9) to (11) three times to complete the unique driver installation procedure.

(13) Disconnect the USB cable, and turn OFF the power switch of the machine.

Confidential