BM-917B

CHAINSTITCH BUTTON SEWER WITH THREAD TRIMMER

Thank you very much for buying a BROTHER sewing machine. Before using your new machine, please read the safety instructions below and the explanations given in the instruction manual.

With industrial sewing machines, it is normal to carry out work while positioned directly in front of moving parts such as the needle and thread take-up lever, and consequently there is always a danger of injury that can be caused by these parts. Follow the instructions from training personnel and instructors regarding safe and correct operation before operating the machine so that you will know how to use it correctly.

SAFETY INSTRUCTIONS

1. Safety indications and their meanings

This instruction manual and the indications and symbols that are used on the machine itself are provided in order to ensure safe operation of this machine and to prevent accidents and injury to yourself or other people.

Indications

⚠ **WARNING**	The instructions which follow this term indicate situations where failure to follow the instructions can result in severe injury or death.
⚠ **CAUTION**	The instructions which follow this term indicate situations where failure to follow the instructions could cause injury when using the machine or physical damage to equipment and surroundings.

Symbols

..... This symbol (△) indicates something that you should be careful of. The picture inside the triangle indicates the nature of the caution that must be taken.
(For example, the symbol at left means “beware of injury”.)

..... This symbol (⃠) indicates something that you <u>must not</u> do.

..... This symbol (●) indicates something that you <u>must</u> do. The picture inside the circle indicates the nature of the thing that must be done.
(For example, the symbol at left means “you must make the ground connection”.)

2. Notes on safety

⚠ WARNING

Do not put your hand into any openings near the belt, as your hands could get caught in the belt, and serious injury could result.

⚠ CAUTION

Environmental requirements

Use the sewing machine in an area which is free from sources of strong electrical noise such as high-frequency welders.
Sources of strong electrical noise may cause problems with correct operation.

Any fluctuations in the power supply voltage should be within ±10% of the rated voltage for the machine.
Voltage fluctuations which are greater than this may cause problems with correct operation.

The power supply capacity should be greater than the requirements for the sewing machine's electrical consumption.
Insufficient power supply capacity may cause problems with correct operation.

The ambient temperature should be within the range of 5°C to 35°C during use.
Temperatures which are lower or higher than this may cause problems with correct operation.

The relative humidity should be within the range of 45% to 85% during use, and no dew formation should occur in any devices.
Excessively dry or humid environments and dew formation may cause problems with correct operation.

Avoid exposure to direct sunlight during use.
Exposure to direct sunlight may cause problems with correct operation.

In the event of an electrical storm, turn off the power and disconnect the power cord from the wall outlet.
Lightning may cause problems with correct operation.

Installation

Machine installation should only be carried out by a qualified technician.

Contact your Brother dealer or a qualified electrician for any electrical work that may need to be done.

The sewing machine weighs more than 25 kg. The installation should be carried out by two or more people.

Do not connent the power cord until installation is complete, otherwise the machine may operate if the treadle is depressed by mistake, which could result in injury.

Be sure to connnect the ground. If the ground connection is not secure, you run a high risk of receiving a serious electric shock, and problems with correct operation may also occur.

All cords should be secured at least 25 mm away from any moving parts. Furthermore, do not excessively bend the cords or secure them too firmly with staples, otherwise there is the danger that fire or electric shocks could occur.

Install the pulley covers (sold separately) to the motor.

If using a work table which has casters, the casters should be secured in such a way so that they cannot move.

Be sure to wear protective goggles and gloves when handling the lubricating oil, so that no oil gets into your eyes or onto your skin, otherwise inflammation can result.
Furthermore, do not drink the oil under any circumstances, as it can cause vomiting and diarrhoea.
Keep the oil out of the reach of children.

⚠ CAUTION

Sewing

This sewing machine should only be used by operators who have received the necessary training in safe use beforehand.

The sewing machine should not be used for any applications other than sewing.

Be sure to wear protective goggles when using the machine.
If goggles are not worn, there is the danger that if a needle breaks, parts of the broken needle may enter your eyes and injury may result.

Turn off the power switch at the following times.
The machine may operate if the pedal is pressed by mistake, which could result in injury.

- When threading the needle
- When checking the needle drop position
- When replacing the needle
- When not using the machine and when leaving the machine unattended

* The motor will keep turning even after the power is switched off as a result of the motor's inertia. Wait until the motor stops fully before starting work.

If using a work table which has casters, the casters should be secured in such a way so that they cannot move.

Attach all safety devices before using the sewing machine. If the machine is used without these devices attached, injury may result.

Do not touch any of the moving parts or press any objects against the machine while sewing, as this may result in personal injury or damage to the machine.

When turning the machine pulley by hand in order to check the needle down position in the hole of the button, turn the pulley until the needle is at the final position after one cycle.
If the needle is at a point midway through the cycle when the power is turned on, the machine will immediately start operating, which could result in injury.

If an error occurs in machine, or if abnormal noises or smells are noticed, immediately turn off the power switch. Then contact your nearest Brother dealer or a qualified technician.

If the machine develops a problem, contact your nearest Brother dealer or a qualified technician.

Cleaning

Turn off the power switch before carrying out cleaning. The machine may operate if the pedal is pressed by mistake, which could result in injury.

* The motor will keep turning even after the power is switched off as a result of the motor's inertia. Wait until the motor stops fully before starting work

Be sure to wear protective goggles and gloves when handling the lubricating oil, so that no oil gets into your eyes or onto your skin, otherwise inflammation can result.
Furthermore, do not drink the oil under any circumstances, as it can cause vomiting and diarrhoea.
Keep the oil out of the reach of children.

Maintenance and inspection

Maintenance and inspection of the sewing machine should only be carried out by a qualified technician.

Ask your Brother dealer or a qualified electrician to carry out any maintenance and inspection of the electrical system.

Turn off the power switch and disconnect the power cord from the wall outlet at the following times. The machine may operate if the pedal is pressed by mistake, which could result in injury.

- When carrying out inspection, adjustment and maintenance
- When replacing consumable parts such as the loopers and knife

* The motor will keep turning even after the power is switched off as a result of the motor's inertia. Wait until the motor stops fully before starting work.

When turning the machine pulley by hand, turn the pulley until the needle is at the final position after one cycle.
If the needle is at a point midway through the cycle when the power is turned on, the machine will immediately start operating, which could result in injury.

If the power switch needs to be left on when carrying out some adjustment, be extremely careful to observe all safety precautions.

Use only the proper replacement parts as specified by Brother.

If any safety devices have been removed, be absolutely sure to re-install them to their original positions and check that they operate correctly before using the machine.

Any problems in machine operation which result from unauthorized modifications to the machine will not be covered by the warranty.

3.Warning labels

The following warning labels appear on the sewing machine.
Please follow the instructions on the labels at all times when using the machine. If the labels have been removed or are difficult to read, please contact your nearest Brother dealer.

1

2

Safety devices:
(A) Finger guard
(B) Eye guard
(C) Needle bar cover
(D) Pulley covers (Option)

3

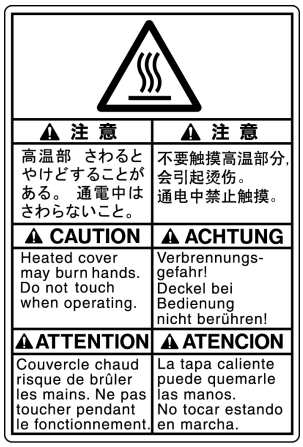

Attach the high temperature label to the motor in a place where it will be easily visible.

4 Be sure to connect the ground. If the ground connection is not secure, you run a high risk of receiving a serious electric shock, and problems with correct operation may also occur.

5 Direction of operation

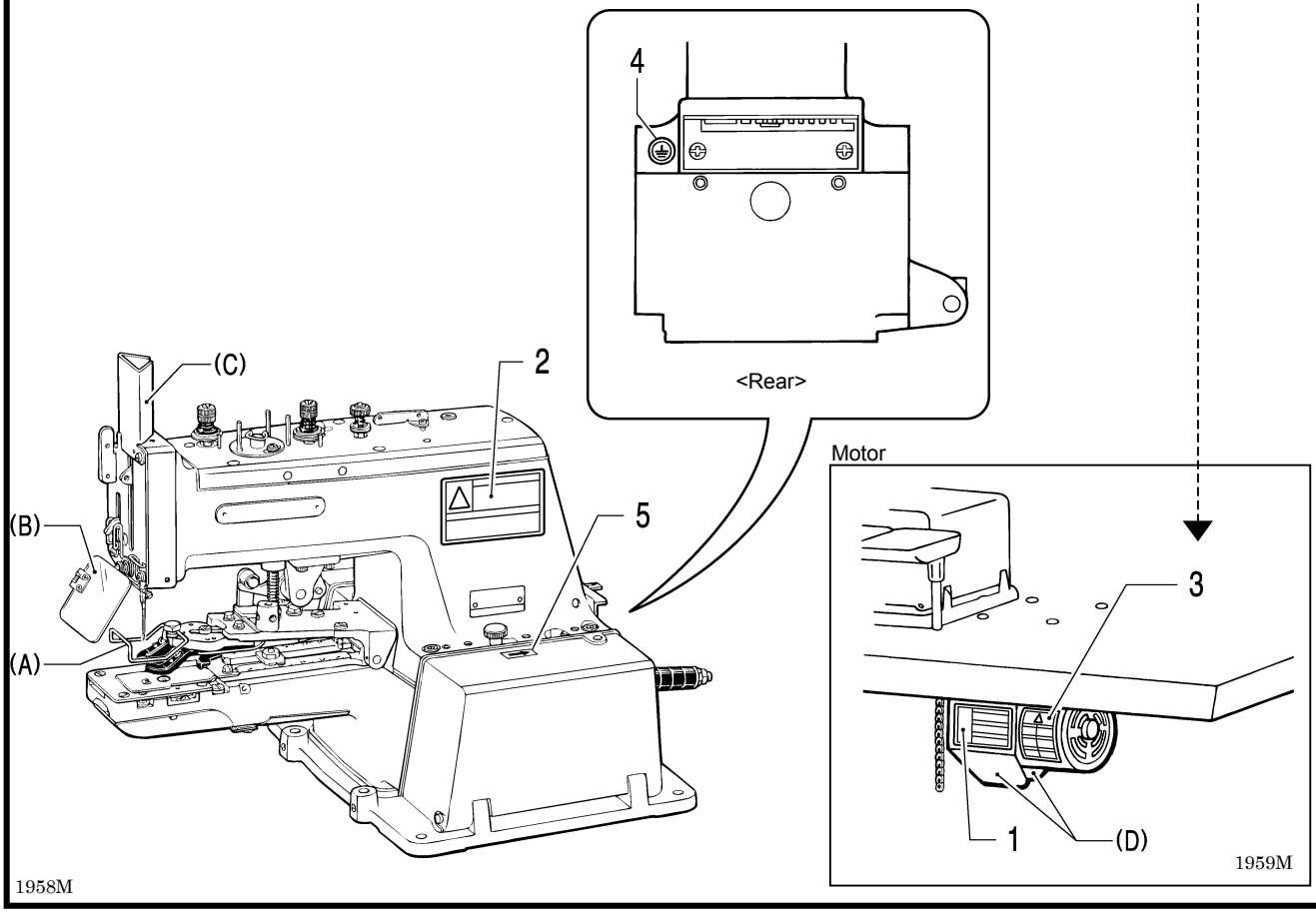

CONTENTS

1.NAMES OF MAJOR PARTS 1

2.MACHINE SPECIFICATIONS 1

3.TABLE PROCESSING DIAGRAM 2

4.MOTOR 3

5.INSTALLATION 4

5-1. Installing the machine head 4
5-2. Installing the belt 5
5-3. Installing the button tray 5
5-4. Installing the cotton stand 5
5-5. Ground Wire Connections 6
5-6. Lubrication 6

6.TEST OPERATION 7

7.TURNING THE MACHINE PULLEY BY HAND 7

8.PREPARATION BEFORE SEWING 8

8-1. Installing the needle 8
8-2. Threading 9
8-3. Adjusting the thread take-up lever 10
8-4. Vertical feed and transverse feed positioning 11
8-5. Setting the button 12
8-6. Setting the number of stitches 13

9.SEWING 14

9-1. Checking the needle drop position 14
9-2. Sewing 14

10.THREAD TENSION 15

10-1. Main thread tension 15
10-2. Adjusting the sub tension timing 15
10-3. Adjusting the thread presser tension opening amount 15
10-4. Adjusting the auxiliary tension 16
10-5. Adjusting the rotor 16
10-6. Adjusting the presser arm pressure 16

11.CLEANING 17

12.STANDARD ADJUSTMENTS 18

12-1. Adjusting the needle bar height 18
12-2. Adjusting the needle and looper timing 18
12-3. Adjusting the needle and looper clearance 19
12-4. Adjusting the needle guide 19
12-5. Adjusting the thread handler 19
12-6. Adjusting the machine pulley clearance in the direction of thrust 20
12-7. Adjusting the brake 20
12-8. Adjusting the button clamp lift amount 20
12-9. Adjusting the button opener 21
12-10. Adjusting the fixed knife and movable knife 22

13.INSTALLING OPTIONAL PARTS 23

13-1. Presser arm 23
13-2. Feed plate 24
13-3. Button clamp set 24

14.TROUBLESHOOTING 25

1. NAMES OF MAJOR PARTS

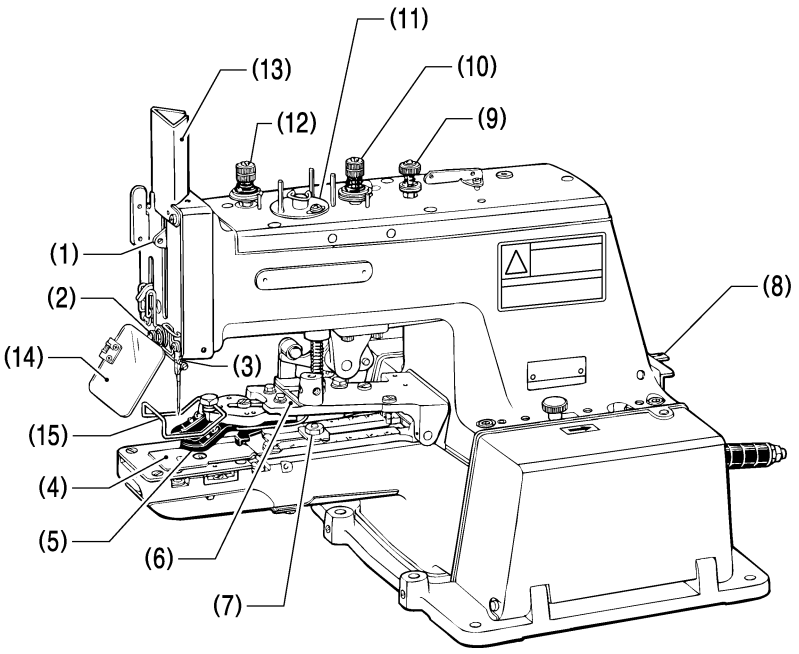

(1) Thread take-up
(2) Sub tension nut
(3) Needle bar
(4) Feed plate
(5) Button clamp
(6) Presser arm
(7) Transverse feed plate
(8) Vertical feed lever
(9) Main tension nut
(10) Auxiliary tension nut
(11) rotor
(12) Thread presser tension nut

Safety devices
(13) Needle bar cover
(14) Eye guard
(15) Finger guard

1960M

2. MACHINE SPECIFICATIONS

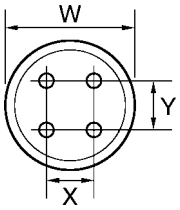

1961M

Subclass	1	2	3	4	5	6	7	8
Stitch form	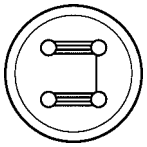 1962M		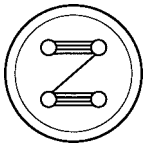 1963M		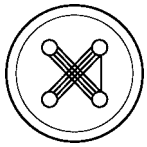 1964M		1965M Temporaly label attaching. (The stitch get loose as pulling the thread tip.)	
Stitch number	8, 16, 32	6, 12, 24	8, 16, 32	6, 12, 24	8, 16, 32	6, 12, 24	8, 16, 32	6, 12, 24
Needle	TQ x 1 #16							
Button size	10–20 mm (W) (10–30 mm : When using the optional button clamp)							
Button hole spacing	2.0–6.5 mm×0–6.5 mm (X x Y)							
Button clamp lift stroke	14 mm							
Maximum sewing speed	1,500 rpm							

3. TABLE PROCESSING DIAGRAM

- The top of the table should be 40 mm in thickness and should be strong enough to hold the weight and withstand the vibration of the sewing machine.
- Drill holes as indicated in the illustration below.

<Seen from above table>

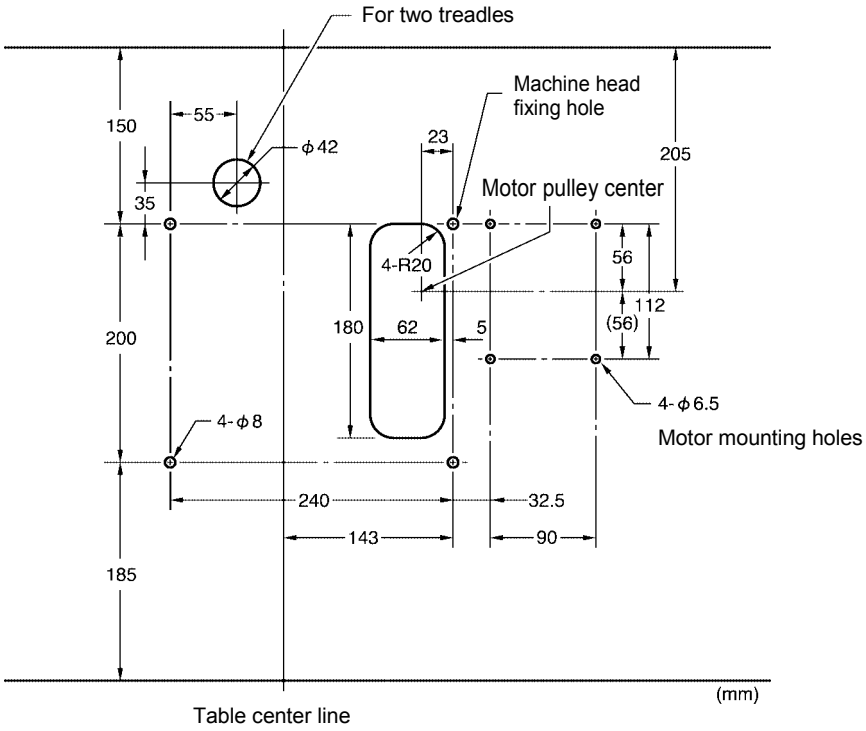

1966M

4. MOTOR

⚠ CAUTION

- All cords which are connected to the motor should be secured at least 25mm away from any moving parts. Furthermore, do not excessively bend the cords or secure them too firmly with staples, otherwise there is the danger that fire or electric shocks could occur.
- Install the pulley covers (sold separately) to the motor.

<Motor>

- Use the applicable motor shown in the table at right.
- Refer to the instruction manual for the motor for details on installing and using the motor.

Power	Motor
Single-phase	4-pole, 250W motor
Three-phase	4-pole, 250W motor

<Motor pulley and V-belt>

- Select the correct motor pulley and V-belt by referring to the table below to suit the power frequency of your area.
- In case of using the round leather belt or sewing at a speed less than 1500 rpm, please adjust the clutch stop position with the brake so that it may not be unfixed. (Refer to p.20.)

Machine speed	Frequency	Motor pulley (Outer diameter)	V-belt
1,500 rpm	50Hz	N-75 pulley(75mm)	M24
	60Hz	N-65 pulley(65mm)	M23

<Diagram of installation position for pulley covers (sold separately)>

<Seen from above table>

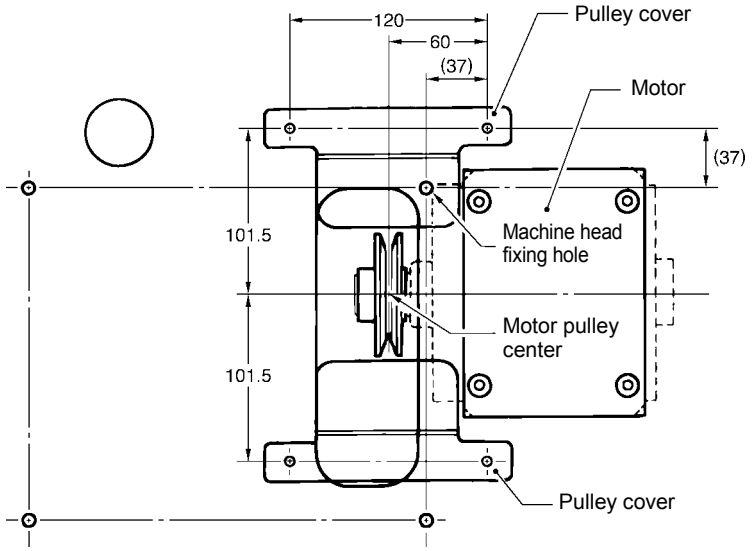

1967M

5. INSTALLATION

⚠ CAUTION

- The sewing machine should only be installed by a qualified technician.
- Ask your Brother dealer or a qualified electrician for any electrical work that may need to be done.
- The sewing machine weights more than 25 kg. The installation should be carried out by two or more people.
- Do not connect the power cord until installation is complete, otherwise the machine will operate if the pedal is pressed by mistake, which coud result in injury.
- Be sure to connect the ground. If the ground connection is not secure, you run a high risk of receiving a serious electric shock, and problems with correct operation may also occur.

5-1. Installing the machine head

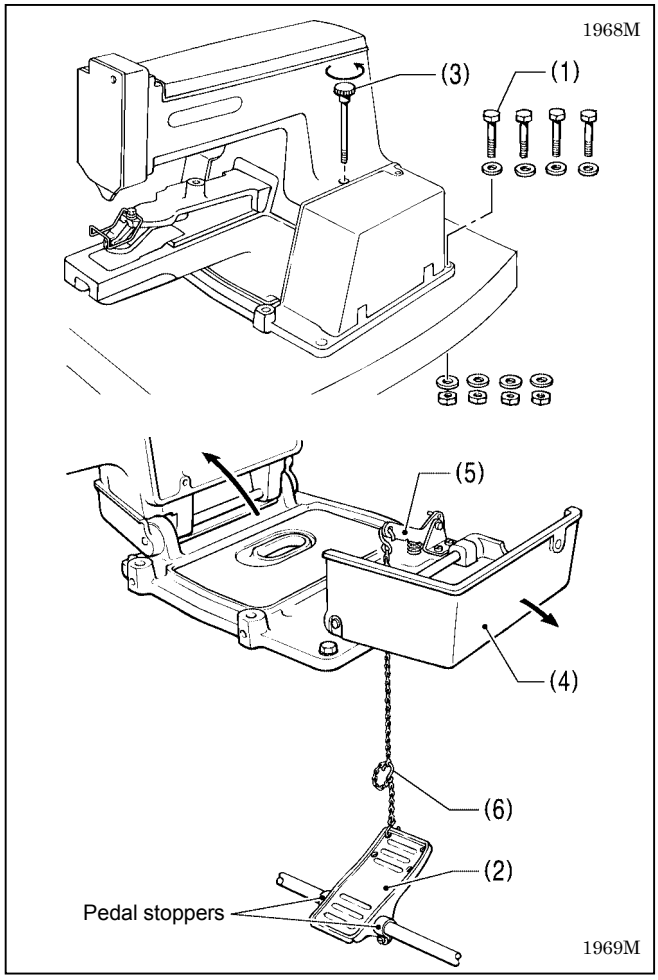

1. Install the machine head to the table with the four bolts (1).
2. Install the pedal (2) to the pipe of the table.
3. Loosen the bolt (3), and then open bed cover R (4).
4. Tilt back the machine head.
5. Attach the chain to the clutch driving lever (5) and the pedal (2).
6. Use the hook (6) to adjust the length of the chain.
7. Return the machine head to its original position, and then tighten the bolt (3).

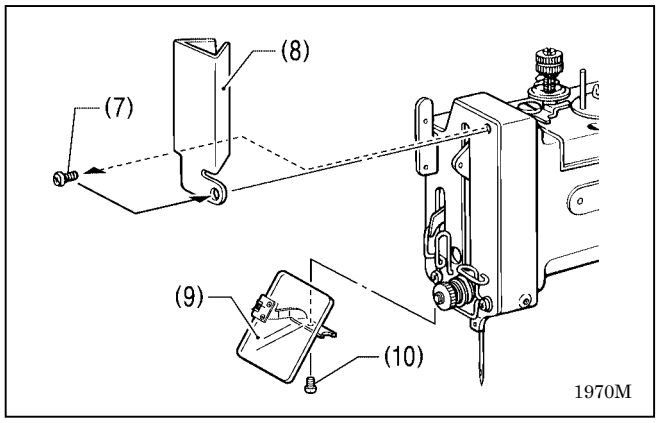

8. Remove the screw (7) from the face plate, and then install the needle bar cover (8).
9. Install the eye guard (9) with the bolt (10).

5-2. Installing the belt

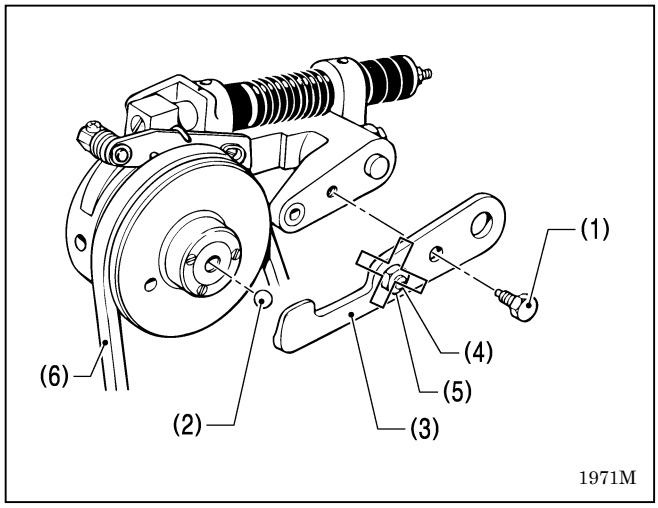

1. Loosen the screw (1), and then remove the ball presser plate (3) while being careful not to drop the bearing ball (2).
   NOTE:
   Do not move the screw (4) and the nut (5).

2. Attach the belt (6).
3. Place the bearing ball (2) back into the hole, and then install the ball presser plate (3) with the screw (1).

5-3. Installing the button tray

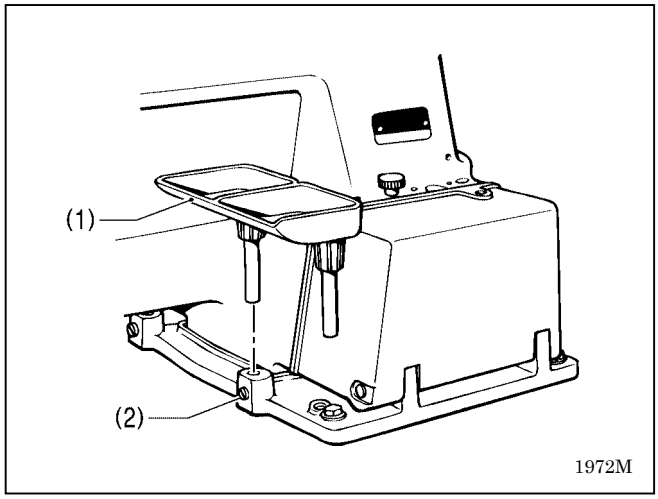

1. Install the button tray (1) to either the left or right side of the bed.
2. Secure it by tightening the set screw (2).

5-4. Installing the cotton stand

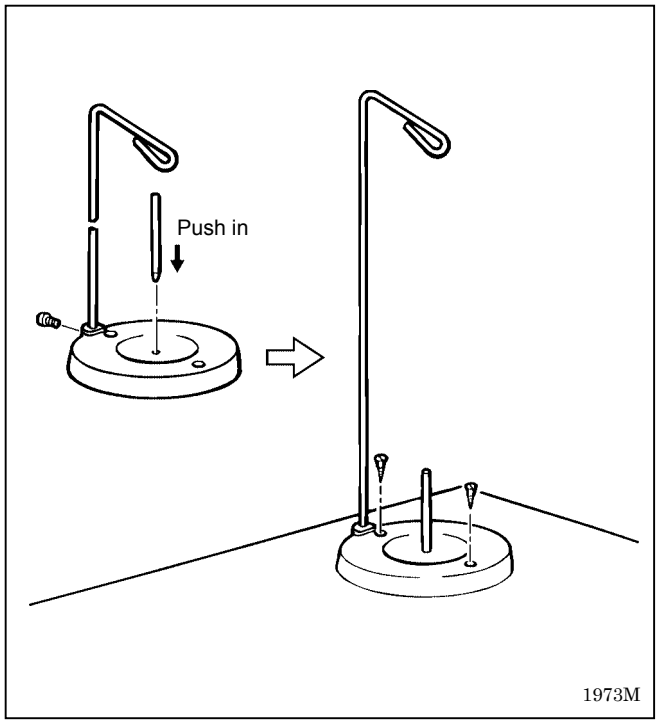

Assmble the cotton stand as shown in the illustration, and then install it to the far right corner of the table with the two wood screws.

5-5. Ground Wire Connections

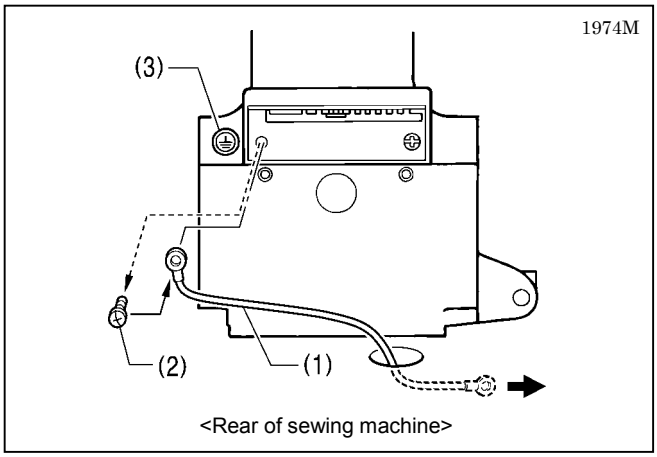

<Rear of sewing machine>

Connect the ground wire to the sewing machine head and motor. (Use the correct type of ground wire.)

1. Secure the ground wire (1) to the sewing machine head with screw(2).
   (The attachment location is indicated by a ground symbol(3).)
2. Pass the ground wire (1) through the hole in the table.
3. Connect the ground wire (1) to the motor in accordance with the instructions in the instruction manual for the motor.

5-6. Lubrication

⚠ CAUTION

- Do not connect the power cord until lubrication has been completed, otherwise the machine may operate if the pedal is pressed by mistake, which could result in injury.
- Be sure to wear protective goggles and gloves when handling the lubricating oil, so that no oil gets into your eyes or onto your skin, otherwise inflammation can result.
  Furthermore, do not drink the oil under any circumstances, as it can cause vomiting and diarrhoea.
  Keep the oil out of the reach of children.

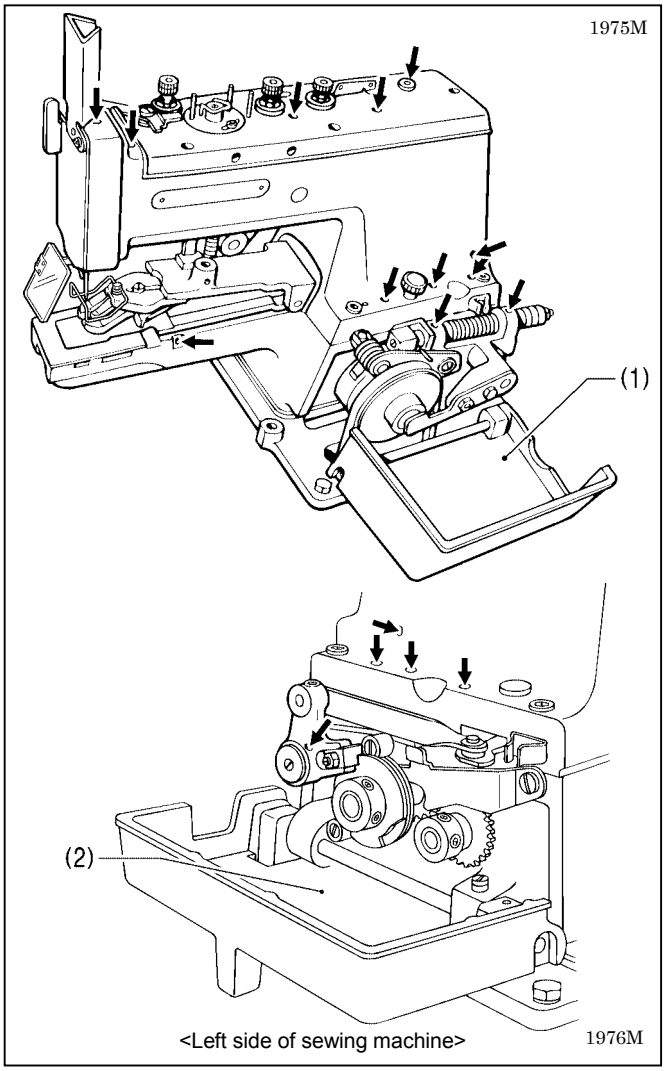

<Left side of sewing machine>

- The sewing machine should always be lubricated and the oil supply replenished before it is used for the first time, and also after long periods of non-use.
- Use only the lubricating oil (Nisseki Mitsubishi Sewing Lube 10N; VG10) specified by Brother.

1. Open bed cover R (1) and bed cover L (2).
2. Add 1–2 drops of oil in the places indicated by the arrows.

6. TEST OPERATION

⚠ CAUTION

Do not touch any of the moving parts or press any objects against the machine while sewing, as this may result in personal injury or damage to the machine.

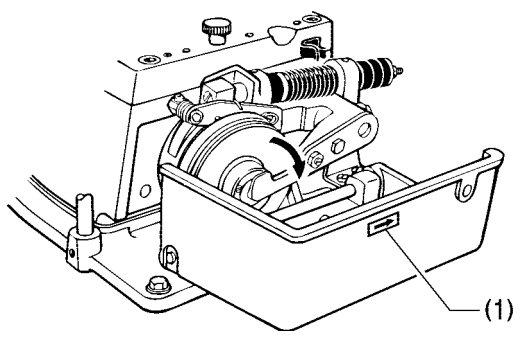

1977M

1. Insert the power cord plug into a wall outlet, and turn on the power switch.
   (The motor will operate and the machine pulley will turn.)
2. Check that the machine pulley is turning in the direction of the arrow (1).
   * If the machine pulley is turning in the opposite direction, change the direction of turning while referring to the instruction manual for the motor.
3. Depress the pedal to start the sewing machine.
4. Release the pedal quickly.
   (The machine will operate for a set number of stitches only, after the thread is trimmed, and then the presser arm will lift up and the sewing machine will stop.)
5. Repeat the operations in steps 3 and 4 several times.

7. TURNING THE MACHINE PULLEY BY HAND

⚠ CAUTION

Turn off the power switch before carrying out this operation.
The machine may operate if the pedal is pressed by mistake, which could result in injury.
* The motor will keep turning even after the power is switched off as a result of the motor's inertia. Wait until the motor stops fully before starting work.

When turning the machine pulley by hand in order to check the needle down position in the hole of the button, turn the pulley until the needle is at the final position after one cycle.
If the needle is at a point midway through the cycle when the power is turned on, the machine will immediately start operating, which could result in injury.

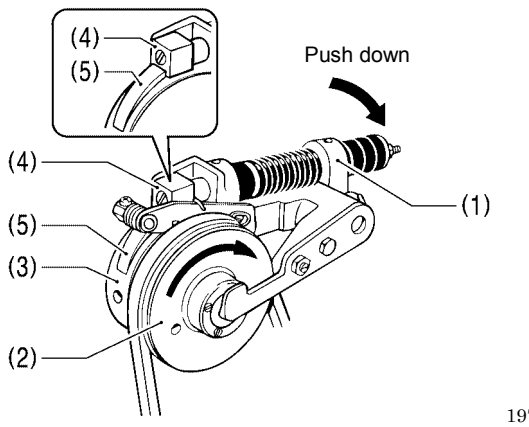

1978M

1. While pushing the clutch body (1) down and holding it there, turn the machine pulley (2) by hand in the direction of the arrow for two or more full revolutions.
2. Release the clutch body (1).
3. Turn the machine pulley (2) by hand.
4. The machine pulley (2) will turn freely after the final stitch is sewn. Keep the stop cam (3) turning until the stopper bracket (4) comes into contact with the end of the stop cam segment (5).
   (The presser arm will lift up, and the cycle of operations for attaching a single button will then be complete.)

* Repeat steps 1 to 4 to carry out the next cycle of operations

8. PREPARATION BEFORE SEWING

8-1. Installing the needle

⚠ CAUTION

Turn off the power switch before installing the needle.
The machine may operate if the pedal is pressed by mistake, which could result in injury.

* The motor will keep turning even after the power is switched off as a result of the motor's inertia. Wait until the motor stops fully before starting work.

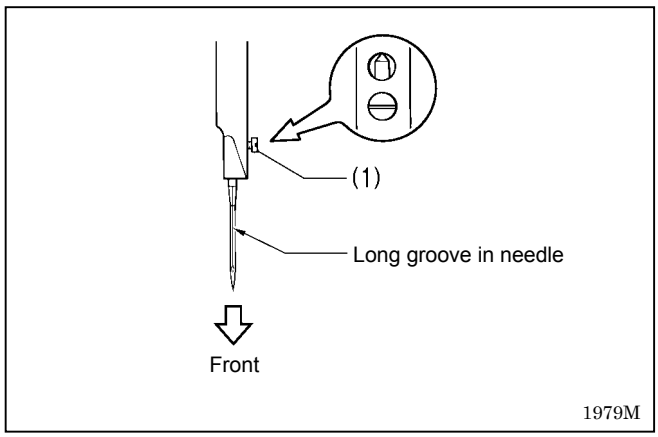

1. Loosen the screw (1).
2. Insert the needle in a straight line as far as it will go, making sure that the long groove on the needle is toward the front, and then securely tighten the screw (1).

8-2. Threading

⚠ CAUTION

Turn off the power switch before threading.
The machine may operate if the pedal is pressed by mistake, which could result in injury.

* The motor will keep turning even after the power is switched off as a result of the motor's inertia. Wait until the motor stops fully before starting work.

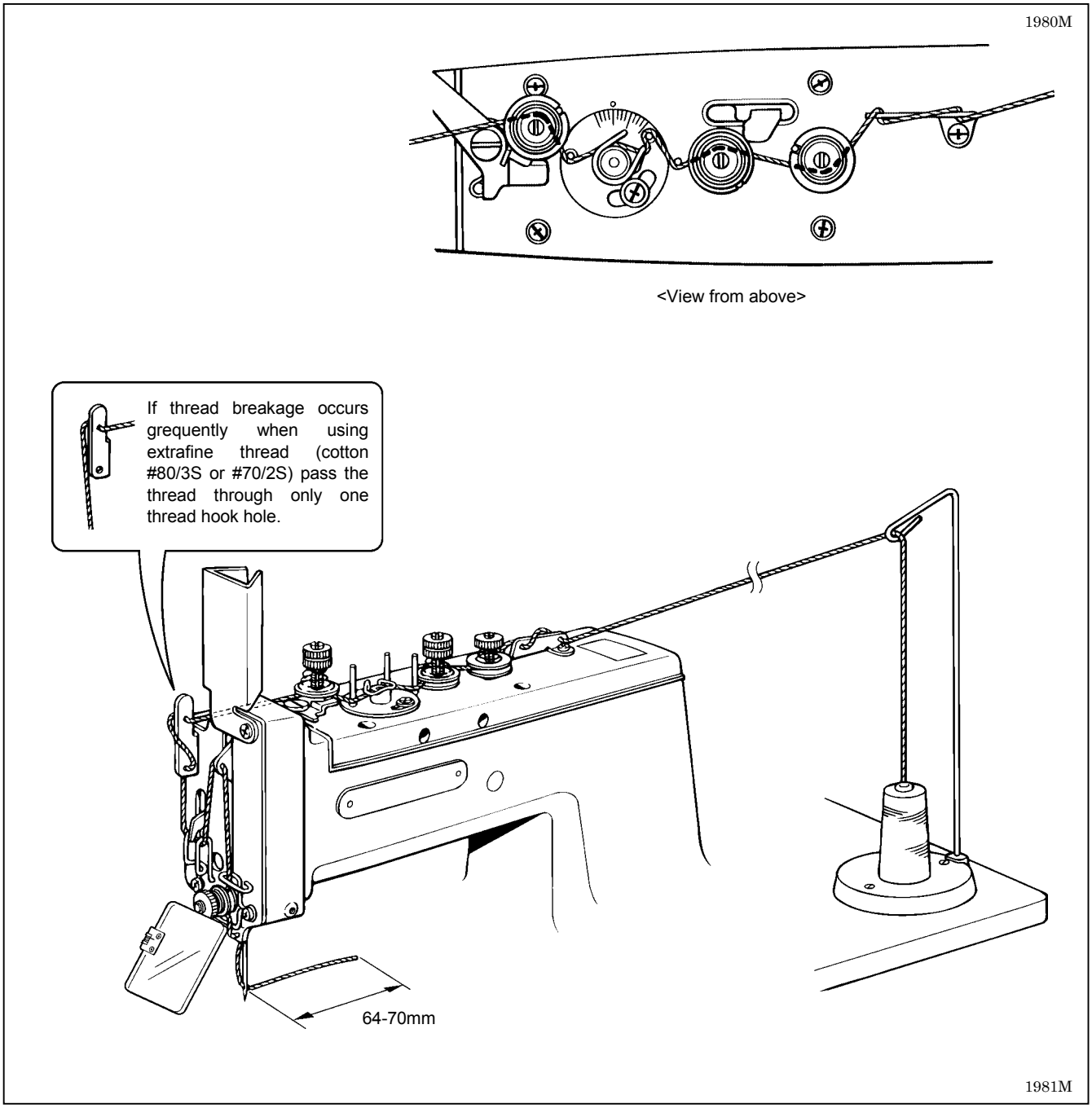

8-3. Adjusting the thread take-up lever

⚠ CAUTION

Turn off the power switch before adjusting the thread take-up lever.
The machine may operate if the pedal is pressed by mistake, which could result in injury.

* The motor will keep turning even after the power is switched off as a result of the motor's inertia. Wait until the motor stops fully before starting work.

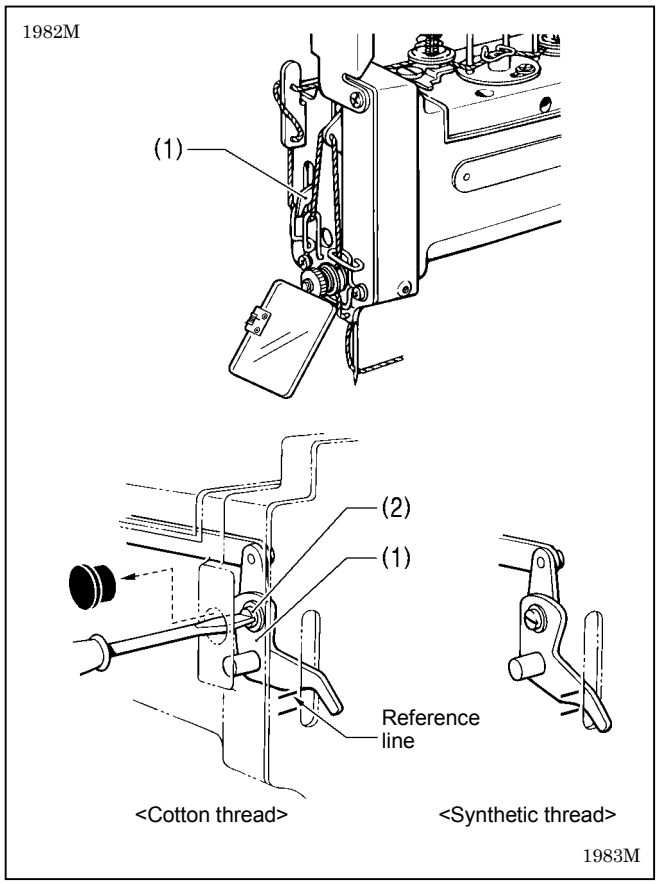

Standard position for thread take-up lever

<Cotton thread>
The bottom of the thread take-up lever (1) should be aligned with the top reference line.

<Spun thread>
The bottom of the thread take-up lever (1) should be aligned with the bottom reference line.

1. At the sewing machine stopping position, loosen the screw (2), and then move the thread take-up lever (1) to adjust it.
2. Tighten the screw (2).

* If the final stitch or stitch joint is frayed, move the thread take-up lever up to reduce the amount of thread take-up.
* If the stitch joint is too loose, move the thread take-up lever (1) down to increase the amount of thread take-up.

8-4. Vertical feed and transverse feed positioning

⚠ CAUTION

Turn off the power switch before carrying out vertical feed and transverse feed positioning.
The machine may operate if the pedal is pressed by mistake, which could result in injury.

* The motor will keep turning even after the power is switched off as a result of the motor's inertia. Wait until the motor stops fully before starting work.

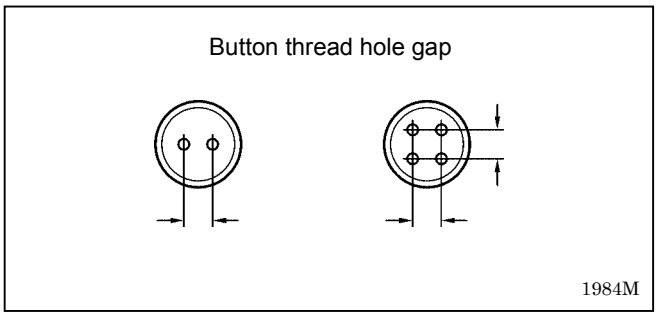

Set the vertical feed and transverse feed positions as described below.

* The standard feed plate is for button thread hole gaps of 2 to 3.5 mm. For button thread hole gaps of 4 to 6.5 mm, use the accessory feed plate (sold separately). (Refer to P.24.)

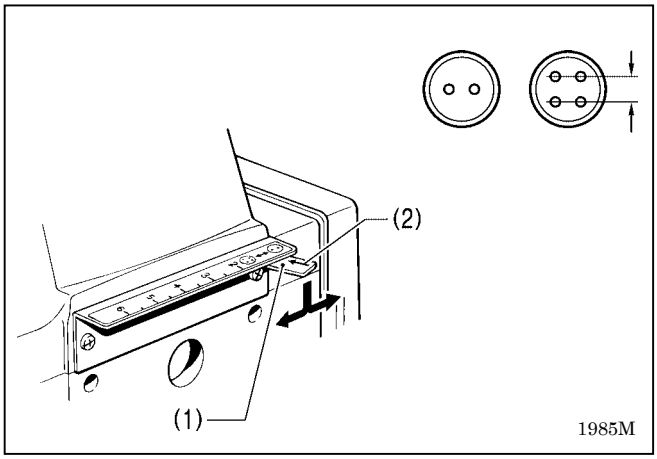

<Vertical Feed>

While pushing the vertical feed lever (1) down, align the arrow (2) with the mark (for buttons with two thread holes) or the button thread hole spacing (scale indicator) (for buttons with four thread holes).

1987M

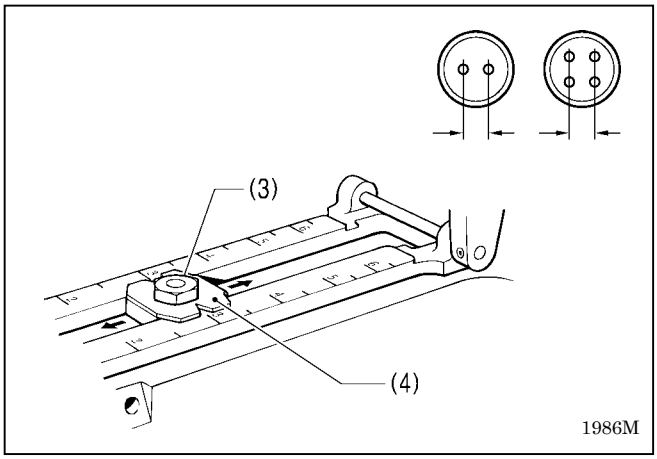

<Transverse feed>

At the sewing machine stopping position, loosen the nut (3) and align the index mark of the transverse feed plate (4) with the button hole spacing (scale indicator).

8-5. Setting the button

⚠ CAUTION

Turn off the power switch before setting buttons.
The machine may operate if the pedal is pressed by mistake, which could result in injury.

* The motor will keep turning even after the power is switched off as a result of the motor's inertia. Wait until the motor stops fully before starting work.

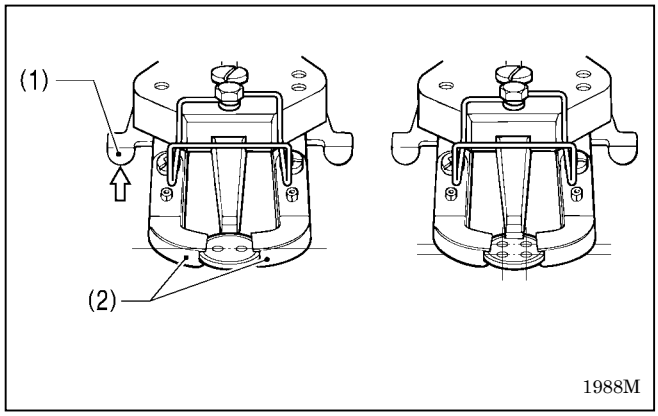

1. When the button clamp plate cam (1) is pushed, the button clamp (2) opens.
2. Insert the button so that it faces in the correct direction as shown in the illustration, and then release the button clamp plate cam (1).

<To sew the same size button>

Adjust the size adjust plate (3) as shown below.
For buttons that are the same size, the buttons can be set easily just by gently inserting them into the button clamp (2), without having to push the button clamp plate cam (1).

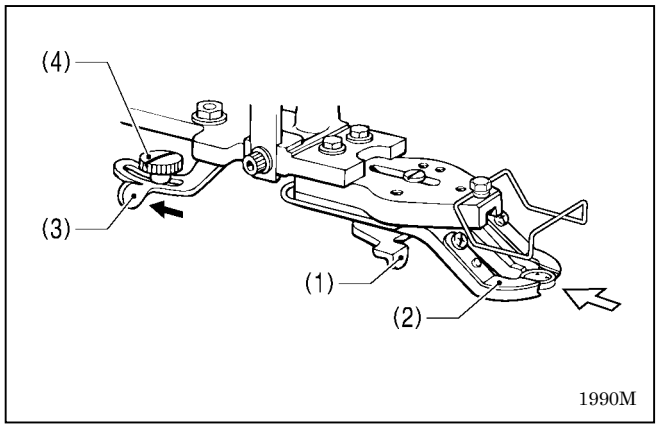

1. Insert a button into the button clamp (2).
2. Loosen the shoulder screw (4), push the size adjust plate (3) in as far as it will go so that the button is held tightly, and then securely tighten the shoulder screw (4).

8-6. Setting the number of stitches

⚠ CAUTION

Turn off the power switch before setting the number of stitches.
The machine may operate if the pedal is pressed by mistake, which could result in injury.

* The motor will keep turning even after the power is switched off as a result of the motor's inertia. Wait until the motor stops fully before starting work.

Open bed cover L, and then set the number of stitches as follows.

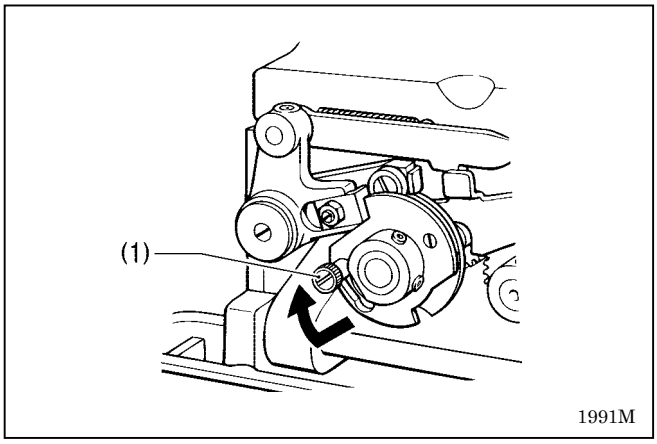

<6 or 8 stiches>

Pull out the stitch control knob (1) and then turn it in the direction of the arrow.

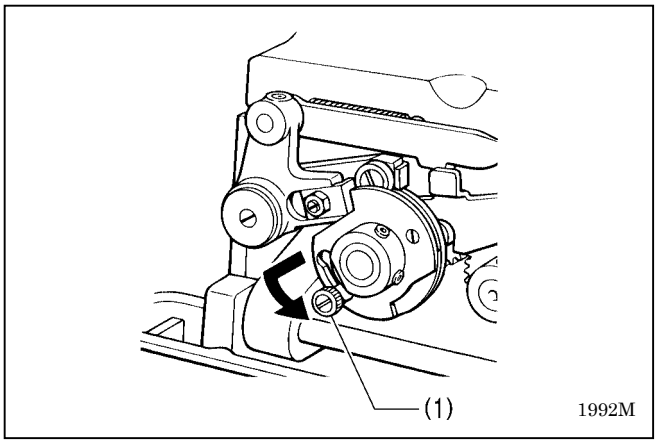

<12 or 16 stitches>

Pull out the stitch control knob (1) and then turn it in the direction of the arrow.

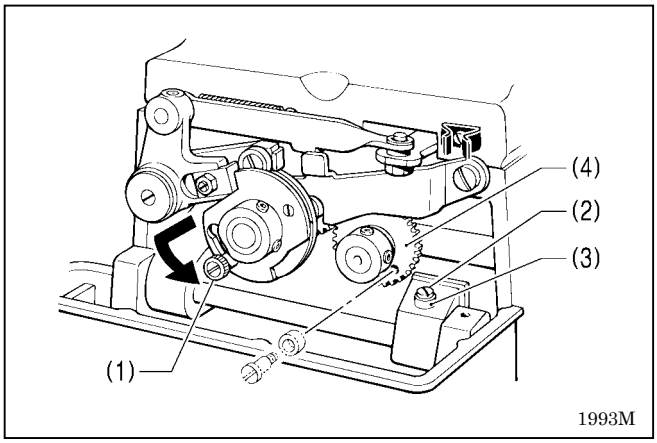

<24 or 32 stitches>

1. Pull out the stitch control knob (1) and then turn it in the direction of the arrow.
2. Remove the shoulder screw (2) and roller (3) from the bed base, and then install them to the stitch hanging gear (4).

9. SEWING

⚠ CAUTION

Attach all safety devices before using the sewing machine. If the machine is used without these devices attached, injury may result.

Turn off the power switch at the following times. The machine may operate if the pedal is pressed by mistake, which could result in injury.

- When threading the needle
- When checking the needle drop position
- When replacing the needle
- When not using the machine and when leaving the machine unattended

* The motor will keep turning even after the power is switched off as a result of the motor's inertia. Wait until the motor stops fully before starting work.

When turning the machine pulley by hand in order to check the needle down position in the hole of the button, turn the pulley until the needle is at the final position after one cycle.
If the needle is at a point midway through the cycle when the power is turned on, the machine will immediately start operating, which could result in injury.

Do not touch any of the moving parts or press any objects against the machine while sewing, as this may result in personal injury or damage to the machine.

9-1. Checking the needle drop position

Before carrying out actual sewing, operate the sewing machine manually and check that the needle drops into the center of the button thread holes.

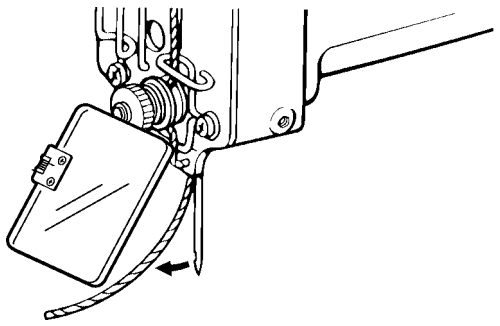

1. Turn off the power switch.
2. Pull the thread out of the needle hole.
3. Set a button in place.
4. Operate the sewing machine manually as described on page 7 and check the needle drop position.
5. Once the needle drop position has been checked, thread the thread through the needle.

<If the needle does not drop into the center of the button thread holes>

1. Check that the distance between the button thread holes has been set correctly. (Refer to p.11.)
2. If the needle is not dropping into the center of the button thread holes, adjust the installation position of the button clamp.
   (Refer to step 8 in 13-3 on p.25.)

9-2. Sewing

1. Turn on the power switch.
2. Set the material in place.
3. Depress the pedal to start the sewing machine.
4. Release the pedal quickly.
   The button will be attached, after the thread is trimmed, and then the presser arm will lift up and the sewing machine will stop.

10.THREAD TENSION

⚠ CAUTION

Turn off the power switch before carrying out this operation.
The machine may operate if the pedal is pressed by mistake, which could result in injury.
* The motor will keep turning even after the power is switched off as a result of the motor's inertia. Wait until the motor stops fully before starting work.

When turning the machine pulley by hand, turn the pulley until the needle is at the final position after one cycle.
If the needle is at a point midway through the cycle when the power is turned on, the machine will immediately start operating, which could result in injury.

10-1. Main thread tension

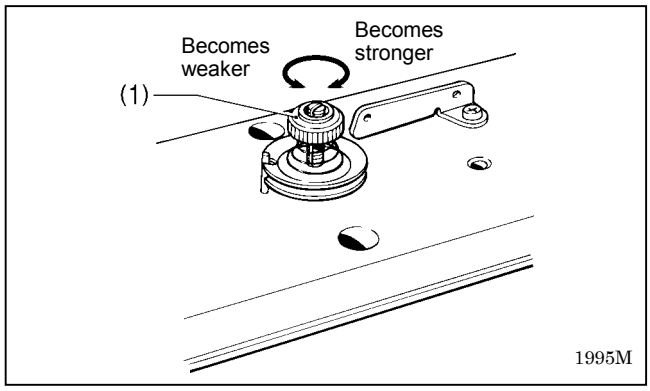

The main thread tension is adjusted by turning the tension nut (1).

10-2. Adjusting the sub tension timing

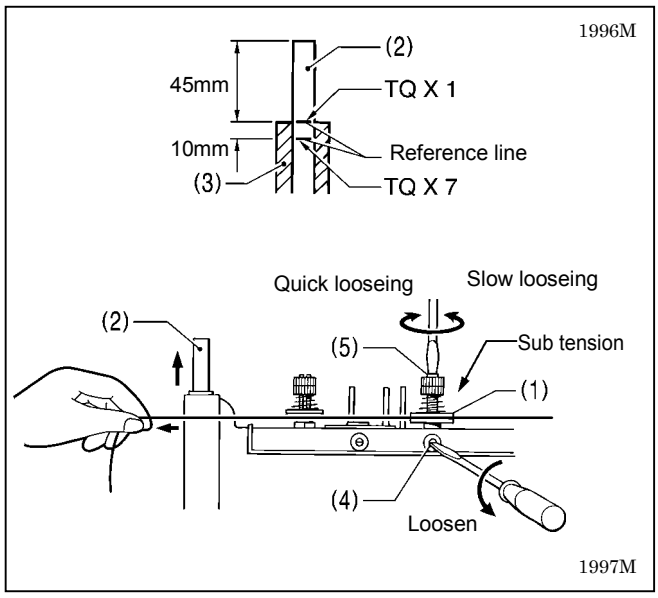

- Pass the thread through only the sub tension, and then while gently pulling the thread, check the timing at which the pressure of the tension discs (1) starts to loosen.
- Turn the machine pulley by hand to raise the needle bar (2) until the reference line is aligned with the top edge of needle bar bush U (3) (needle bar height 45 mm), and adjust the timing so that the tension discs (1) start to loosen at this point.

1. Loosen the set screw (4), and then turn the sub tension stud (5) to adjust the timing.
2. Tighten the set screw (4).

10-3. Adjusting the thread presser tension opening amount

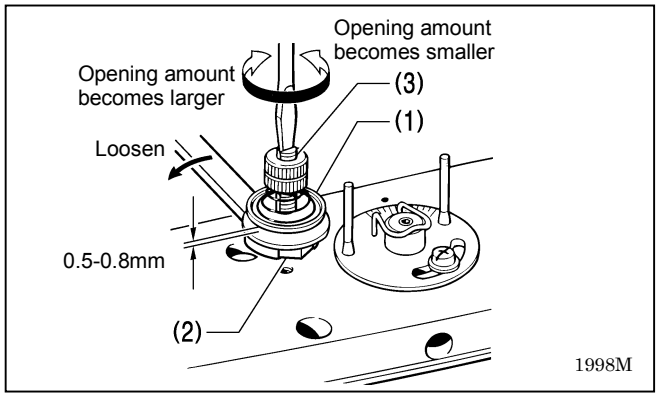

Adjust so that the tension disc presser (1) opens by 0.5-0.8 mm when the sewing machine starts (when the machine pulley is turned by hand).
1. Loosen the nut (2), and then turn the thread presser tension stud (3) to adjust the opening amount.
2. Tighten the nut (2).

10-4. Adjusting the auxiliary tension

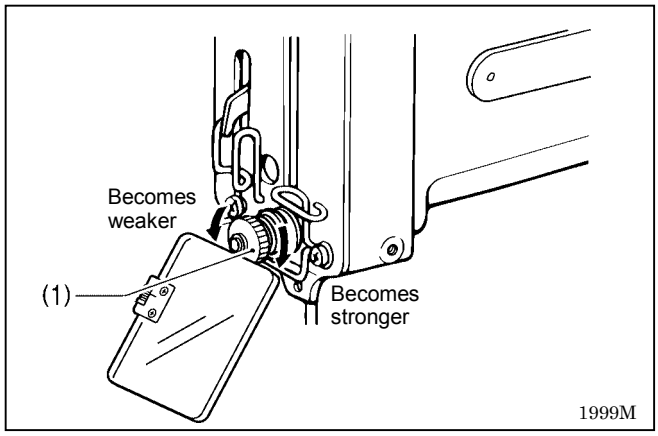

The auxiliary tension is adjusted by turning the tension nut (1).

10-5. Adjusting the rotor

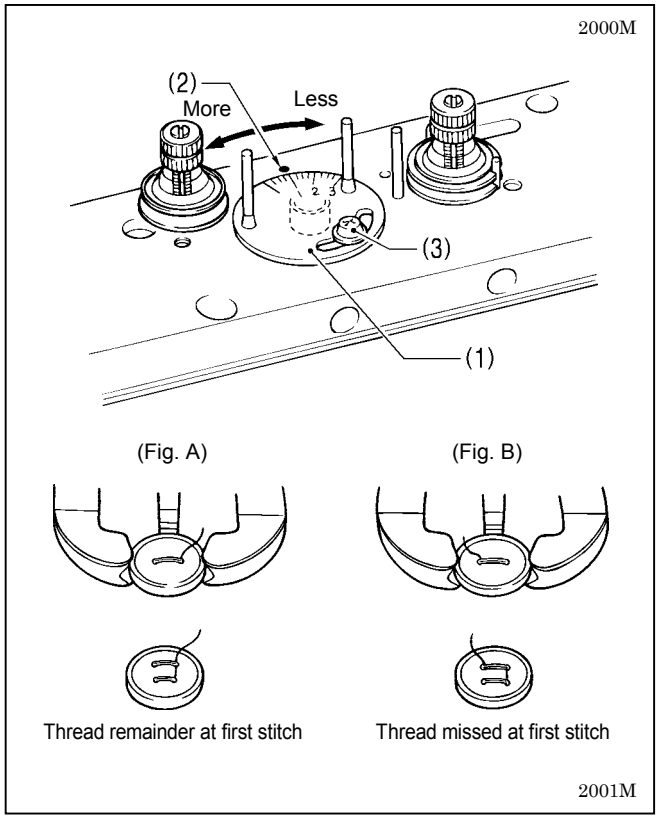

The standard position for the rotor (1) at the sewing machine stopping position is the position where the <1.5> scale indicator should be aligned with the index mark (2).

1. Loosen the screw (3), and turn the rotor (1) to adjust the position.
2. Tighten the screw (3).

The higher the scale setting, the greater is the amount of thread take-up.

- If the thread end hangs out at the first stitch buttonhole, reduce the rotor (1) setting. (Fig.A)
- If the thread end hangs out at the second stitch buttonhole, increase the rotor (1) setting. (Fig.B)0

10-6. Adjusting the presser arm pressure

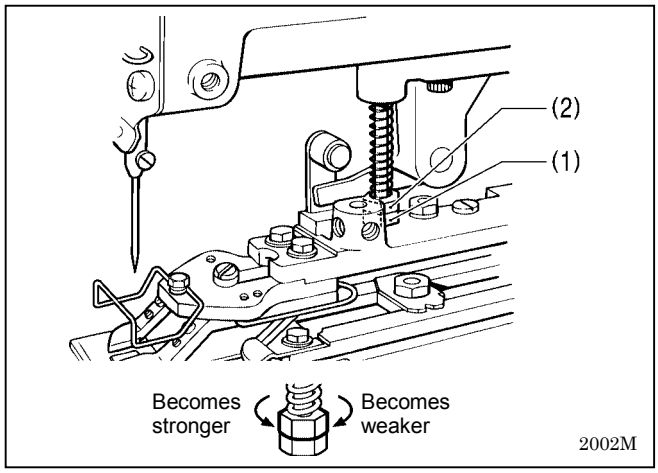

Adjust the pressure to be as weak as possible so that the material does not slip when it is pulled gently.

1. Loosen the nut (1), and then turn the nut (2) to adjust the pressure.
2. Tighten the nut (1).

11.CLEANING

The followinig cleaning operations should be carried out each day in order to maintain the perfomance of this machine and to ensure a long service life.
Furthermore, if the sewing machine has not been used for a long period of time, carry out the following cleaning procedures before using it again.

⚠ CAUTION

Turn off the power switch before carrying out cleaning.
The machine may operate if the pedal is pressed by mistake, which could result in injury.
* The motor will keep turning even after the power is switched off as a result of the motor's inertia. Wait until the motor stops fully before starting work.

Be sure to wear protective goggles and gloves when handling the lubricating oil, so that no oil gets into your eyes or onto your skin, otherwise inflammation can result.
Furthermore, do not drink the oil under any circumstances, as it can cause vomiting and diarrhoea.
Keep the oil out of the reach of children.

<Lubrication>

Use only the lubricating oil (Nisseki Mitsubishi Sewing Lube 10N ; VG10) specified by Brother.

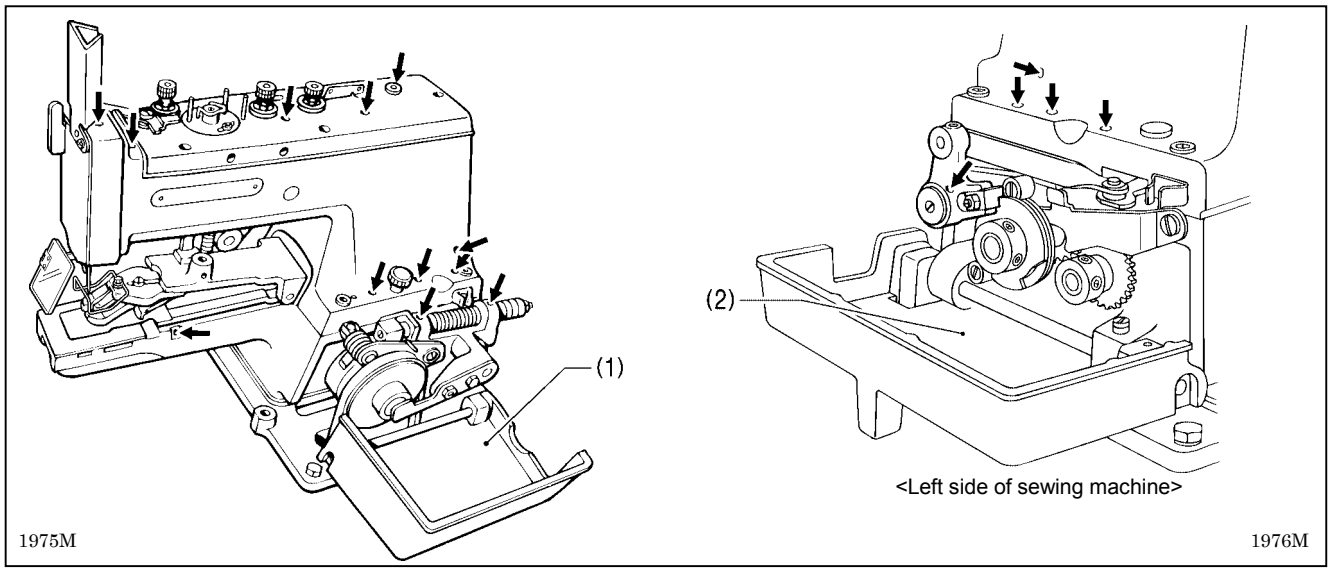

1. Open bed cover R (1) and bed cover L (2).
2. Add 1–2 drops of oil in the places indicated by the arrows.

<Cleaning the eye guard>

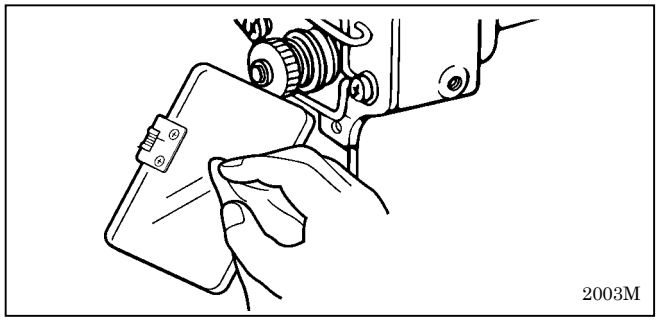

Wipe the eye guard clean with a soft cloth.
NOTE : Do not use solvents such as kerosene or thinner to clean the eye guard.

<Checking the needle>

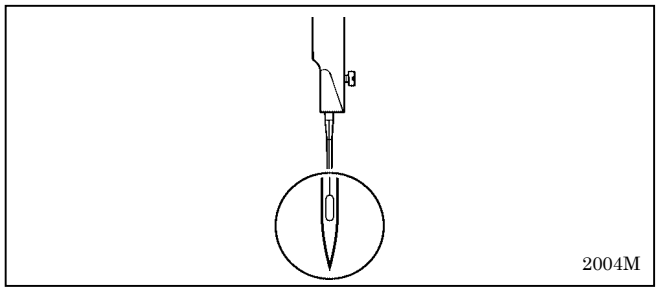

If the needle tip is bent or broken, replace the needle.

12. STANDARD ADJUSTMENTS

⚠ CAUTION

Maintenance and inspection of the sewing machine should only be carried out by a qualified technician.

Ask your Brother dealer or a qualified electrician to carry out any maintenance and inspection of the electrical system.

Turn off the power switch and disconnect the power cord from the wall outlet at the following times. The machine may operate if the pedal is pressed by mistake, which could result in injury.
- When carrying out inspection, adjustment and maintenance
- When replacing consumable parts such as the loopers and knife

* The motor will keep turning even after the power is switched off as a result of the motor's inertia. Wait until the motor stops fully before starting work.

When turning the machine pulley by hand, turn the pulley until the needle is at the final position after one cycle.
If the needle is at a point midway through the cycle when the power is turned on, the machine will immediately start operating, which could result in injury.

If the power switch needs to be left on when carrying out some adjustment, be extremely careful to observe all safety precautions.

If any safety devices have been removed, be absolutely sure to re-install them to their original positions and check that they operate correctly before using the machine.

12-1. Adjusting the needle bar height

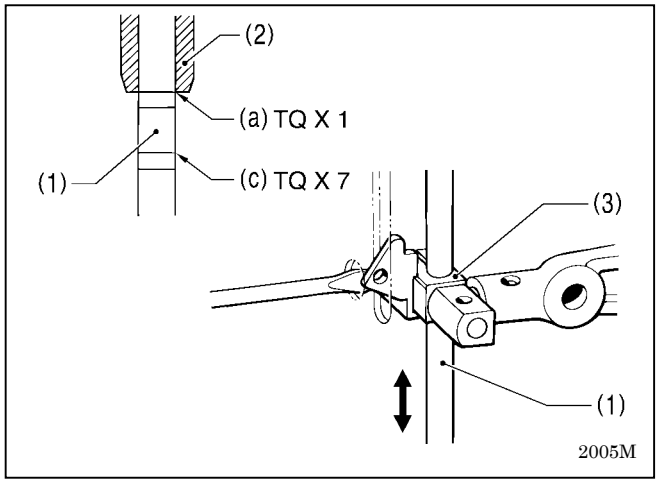

Adjust so that reference line (a) on the needle bar (1) is aligned with the bottom edge of needle bar bush D (2) when the needle bar (1) is at its lowest position.

* If using a TQx7 needle, adjust by aligning reference line (c).

1. Turn the machine pulley to set the needle bar (1) to its lowest position.
2. Loosen the screw of the needle bar clamp (3) by inserting a screwdriver through the hole in the face plate, and then move the needle bar (1) up or down to adjust the height.
3. Tighten the screw of the needle bar clamp (3).

12-2. Adjusting the needle and looper timing

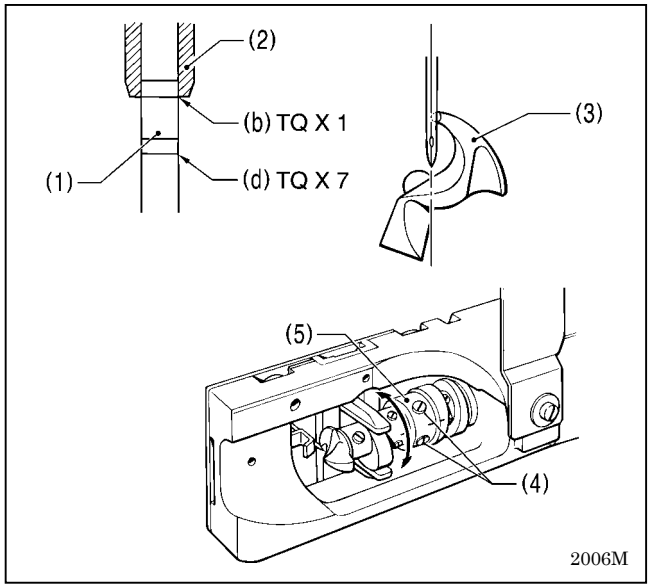

Adjust so that the tip of the looper (3) is aligned with the center of the needle when the needle bar (1) rises from its lowest position until reference line (b) of the needle bar (1) is aligned with the bottom edge of needle bar bush D (2).

* If using a TQx7 needle, adjust by aligning reference line (d).

1. Loosen the two set screws (4), and then turn the looper setting shaft (5) to adjust the timing.
2. Tighten the set screws (4).

12-3. Adjusting the needle and looper clearance

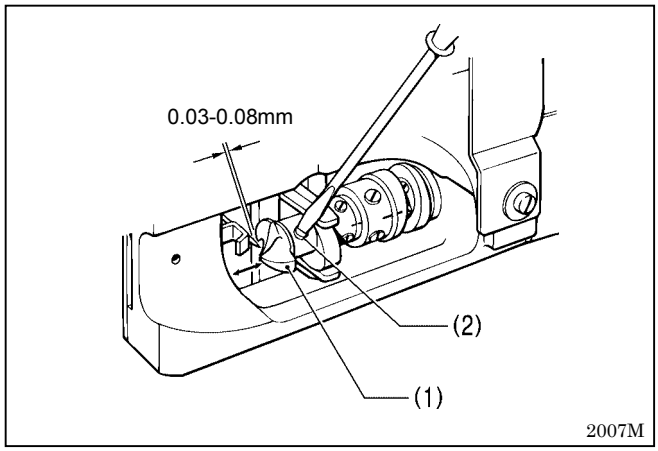

Adjust so that the clearance between the needle and the tip of the looper (1) is 0.03-0.08 mm when the needle bar rises from its lowest position until the tip of the looper (1) is aligned with the center of the needle.

1. Loosen the set screw (2), and then move the looper (1) to adjust the clearance.
2. Tighten the set screw (2).

12-4. Adjusting the needle guide

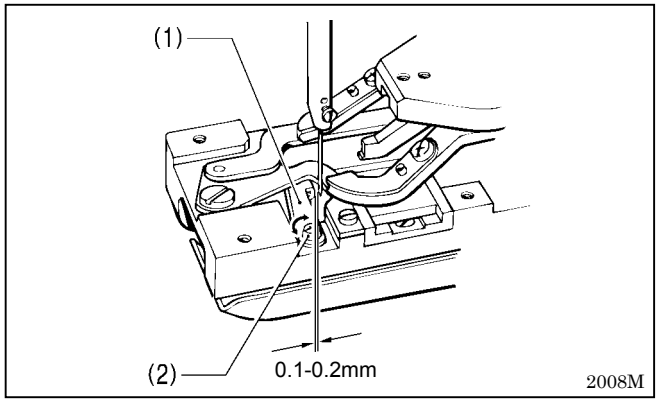

Adjust the clearance between the needle and the needle guard (1) to 0.1-0.2 mm.

1. Remove the feed plate and the needle plate.
2. Loosen the screw (2), and then move the needle guard (1) to adjust the clearance.
3. Tighten the screw (2).
4. Install the feed plate and the needle plate.

12-5. Adjusting the thread handler

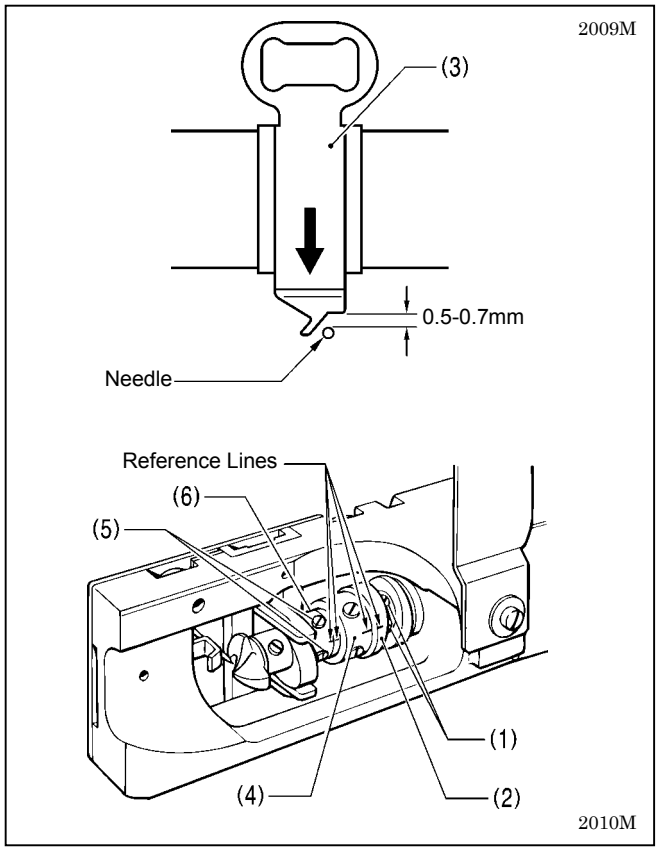

<Longitudinal direction>

1. Turn the machine pulley to set the needle bar to its lowest position.
2. Loosen the two set screws (1).
3. Turn the grooved cam (2) to move the thread handler (3) to the maximum forward position.
4. Move the grooved cam (2) forward or back to adjust so that the clearance between the needle and the thread handler (3) is 0.5-0.7 mm at this time.
5. Turn the grooved cam (2) to align the reference line with the reference line of the looper setting shaft (4).
6. Tighten the set screws (1).

<Transverse direction>

1. Loosen the two set screws (5).
2. Turn the triangular cam (6) to align the reference line with the reference line of the looper setting shaft (4).
3. Tighten the set screws (5).

12-6. Adjusting the machine pulley clearance in the direction of thrust

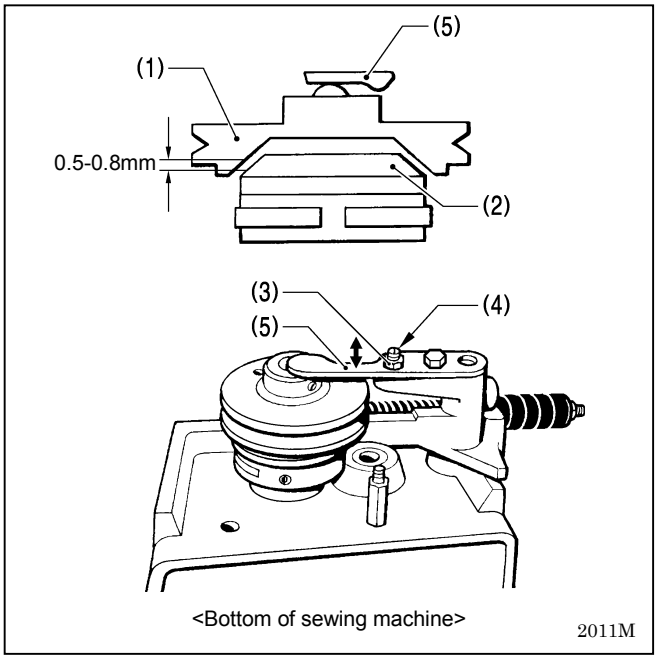

At the sewing machine stopping position, adjust the clearance between the machine pulley (1) and the clutch plate (2) to 0.5-0.8 mm.

1. Loosen the nut (3), and then turn the set screw (4) to adjust the position of the ball presser plate (5).
2. Tighten the nut (3).

12-7. Adjusting the brake

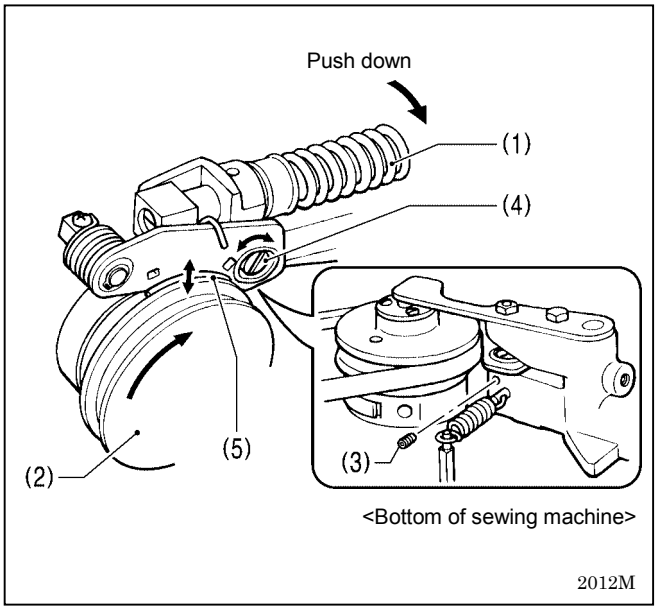

1. While pushing the clutch body (1) down, turn the machine pulley (2) two or more complete turns in the direction of the arrow.
2. Loosen the set screw (3) at the lower part of the clutch body (1)
3. Turn the brake lever shaft (4) until the brake shoe (5) is at its lowest position.
   (The force of the brake will be increased.)
4. Tighten the set screw (3) to secure the brake lever shaft (4).

* If the brake is grabbing at low temperatures and low operating speeds and causing the machine to stop before the correct stopping position, it might be caused by one of the following problems. In such cases, raise the position of the brake shoe (5) in step 3. above.
- Work clamp lift amount is too small
- Thread is not being trimmed

12-8. Adjusting the button clamp lift amount

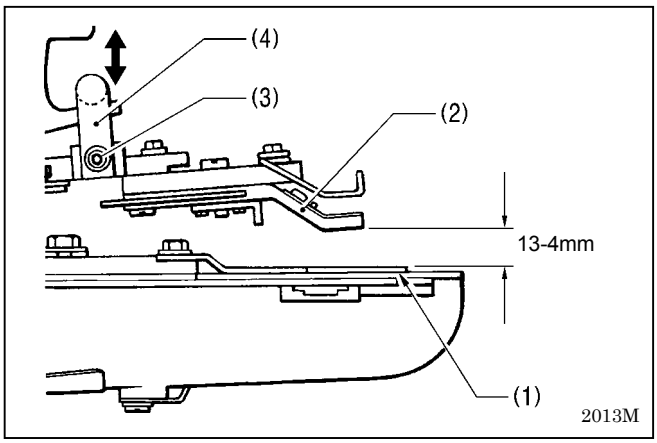

Adjust the distance from the top of the feed plate (1) to the edge of the button clamp (2) to 13-14 mm.

1. Loosen the bolt (3), and then move the presser adjust plate (4) up or down to adjust the distance.
2. Tighten the bolt (3).

12-9. Adjusting the button opener

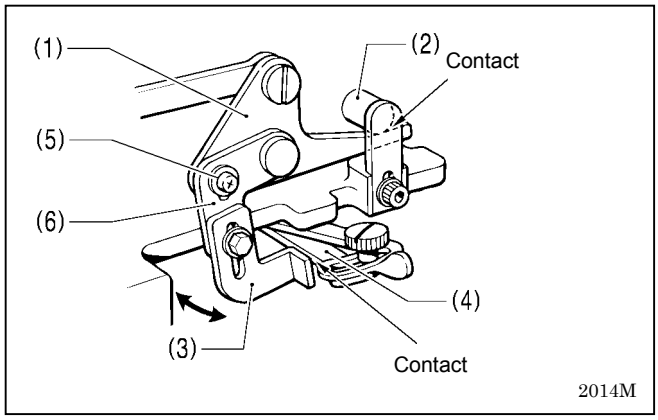

Carry out the following adjustment after carrying out the adjustment in “Adjusting the button clamp lift amount”.

<Transverse position>

Adjust so that button opener claw B (3) touches the button opener claw (4) at the same time as the presser lifter arm (1) touches the roller (2) when the machine pulley is turned to move the mechanism to the final stitch position.

1. Loosen the screw (5), and then move the claw adjusting plate (6) to adjust the transverse position.
2. Tighten the screw (5).

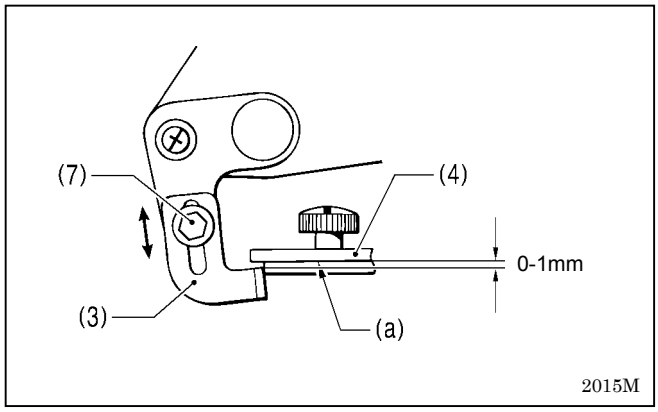

<Vertical position>

After making the above adjustment, adjust so that the clearance between button opener claw B (3) and surface (a) of the button opener claw (4) is 0-1 mm.

1. Loosen the bolt (7), and then move button opener claw B (3) up or down to adjust the position.
2. Tighten the bolt (7).

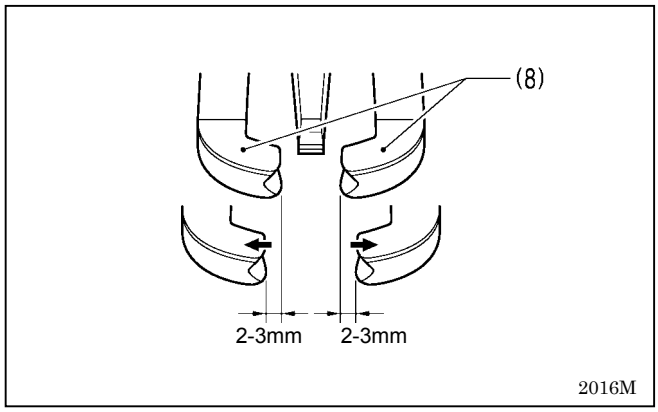

<Checking>

Turn the machine pulley and check that the opening amount for the tip of the button clamp (8) is 2-3 mm at both left and right.

* If the opening amount is not correct, repeat the “Vertical position” adjustment above.

12-10. Adjusting the fixed knife and movable knife

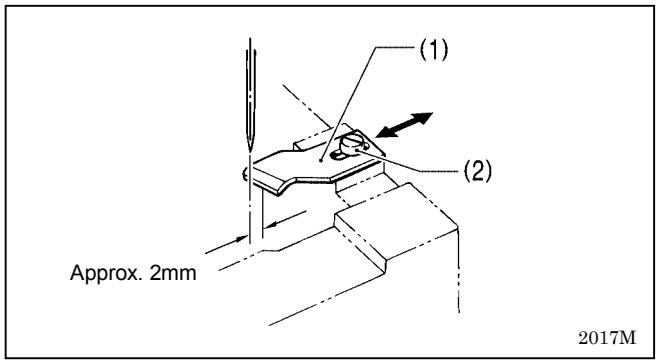

<Fixed knife position>

Install and adjust the fixed knife (1) so that the distance between the knife tip and the needle center is approximately 2 mm.

1. Remove the feed plate and needle plate.
2. Loosen the screw (2), and then move the fixed knife (1) to adjust its position.
3. Tighten the screw (2).

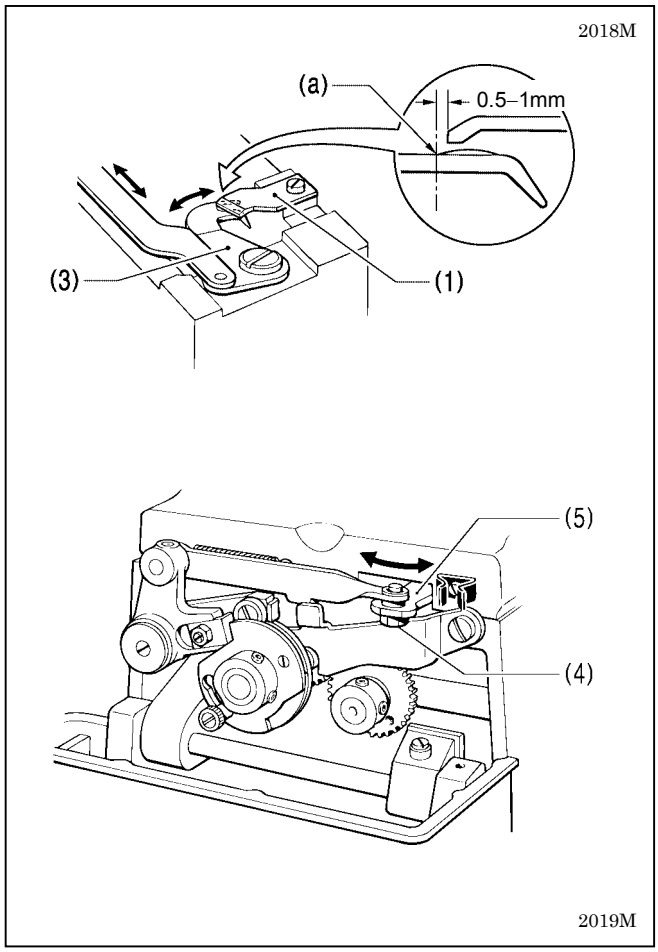

<Movable knife position>

At the sewing machine stopping position, adjust the distance between the tip of the projection (a) on the movable knife (3) to the edge of the blade of the fixed knife (1) to 0.5-1 mm.

1. First adjust the position of the fixed knife (1). (Refer to above.)
2. Loosen the nut (4), and then move the connecting lever (5) to adjust the distance.
3. Tighten the nut (4).
4. Install the feed plate and the needle plate.

13. REPLACING PARTS

⚠ CAUTION

Replacement of parts should only be carried out by a qualified technician.

Turn off the power switch and disconnect the power cord before installing any optional parts.
The machine may operate if the pedal is pressed by mistake, which could result in injury.

* The motor will keep turning even after the power is switched off as a result of the motor's inertia. Wait until the motor stops fully before starting work.

When turning the machine pulley by hand, turn the pulley until the needle is at the final position after one cycle.
If the needle is at a point midway through the cycle when the power is turned on, the machine will immediately start operating, which could result in injury.

13-1. Presser arm

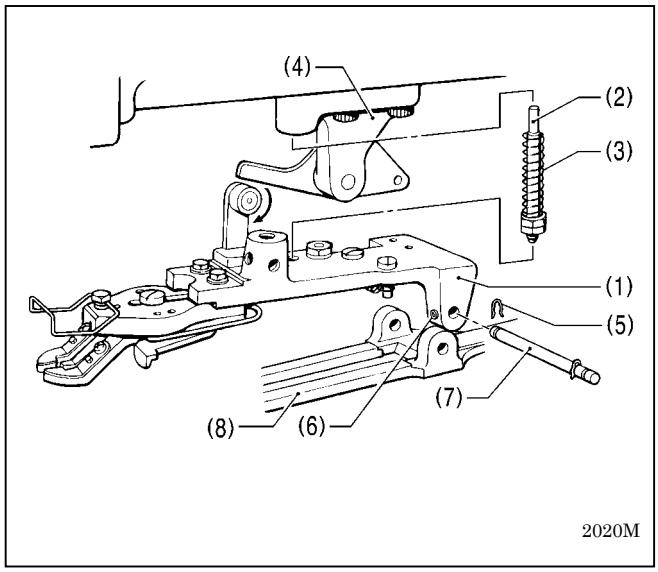

<Removal>

1. Remove the needle.
2. Depress the pedal to lower the presser arm (1).
3. While pushing the spring guide (2) and the spring (3) up in the direction of the bracket (4), pull them forward or to the right to remove them.
4. Remove the snap (5) at the left side.
5. Loosen the two set screws (6), pull out the holder bar (7) and then remove presser arm (1).

<Installation>

1. Align the holes in the presser arm (1) and the feed bracket (8), and then pass the holder bar (7) through the holes.
2. Place the snap (5) into the groove in the holder bar (7), and then tighten the two set screws (6).
3. Insert the spring (3) and the spring guide (2) into the bracket (4), and then push them into the recess in the presser arm (1).
4. While lifting the presser arm (1) by hand, turn the rotor (9) in the direction of the arrow until it clicks.
   The presser arm (1) will remain in the up position.

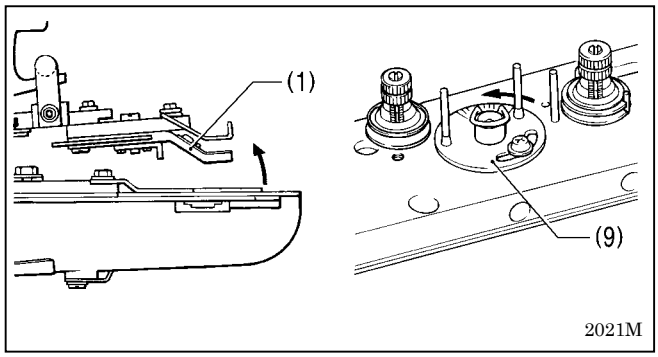

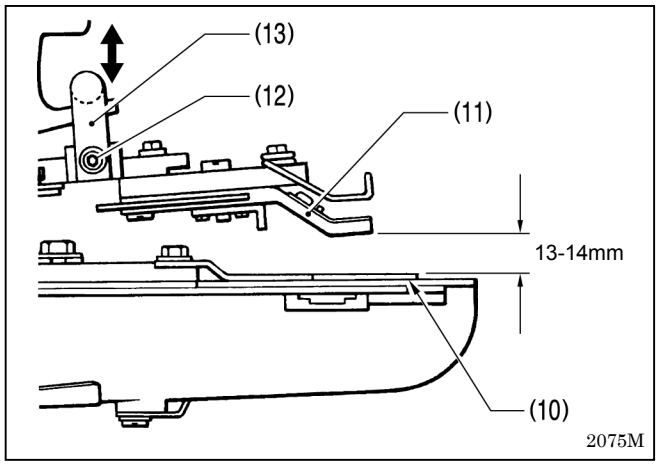

5. Loosen the bolt (12) and move the presser adjust plate (13) until the distance between the top of the feed plate (10) and the end of the button clamp (11) is 13-14 mm.
   * If using the B913 or B915 type of presser arm, adjust using the button holder hook (sold separately) instead of the presser adjust plate.
     Button holder hook (Parts No. : S38181001)
6. Securely tighten the bolt (12).
7. Install the needle.

13-2. Feed plate

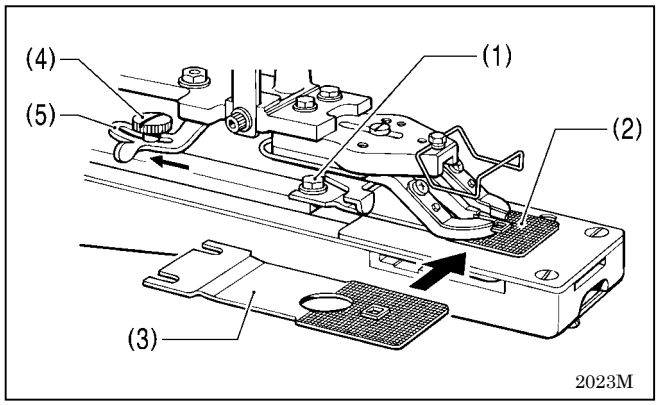

1. Loosen the two bolts (1), and then remove the feed plate (2) that is currently installed.
2. Provisionally install the new feed plate (3) with the two bolts (1).
3. Loosen the shoulder screw (4), push the size adjust plate (5) as far as it will go, and then tighten the shoulder screw (4).
4. Align the vertical feed lever and the transverse feed plate with the <3.5> scale indicator. (Refer to p.11.)

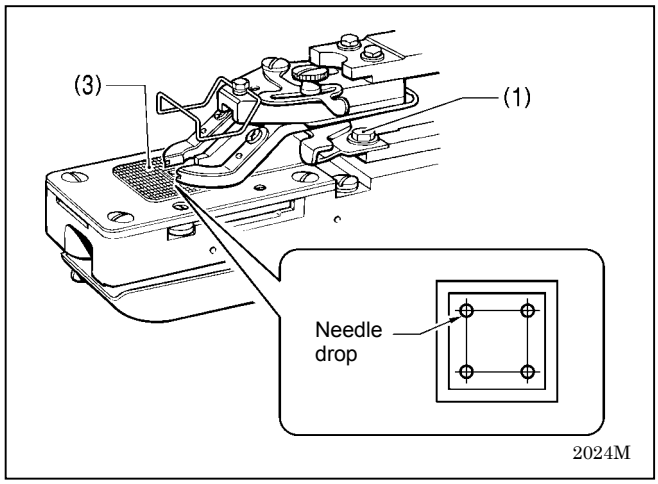

5. Turn the machine pulley by hand and check that the needle drop positions for the hole in the feed plate (3) are correct.
   * Adjust the position of the feed plate (3) so that the needle does not touch the edge of the hole in the feed plate (3), and so that the four button thread hole positions are evenly spaced from each other.
6. Once the feed plate (3) has been positioned, tighten the bolts (1).

13-3. Button clamp set

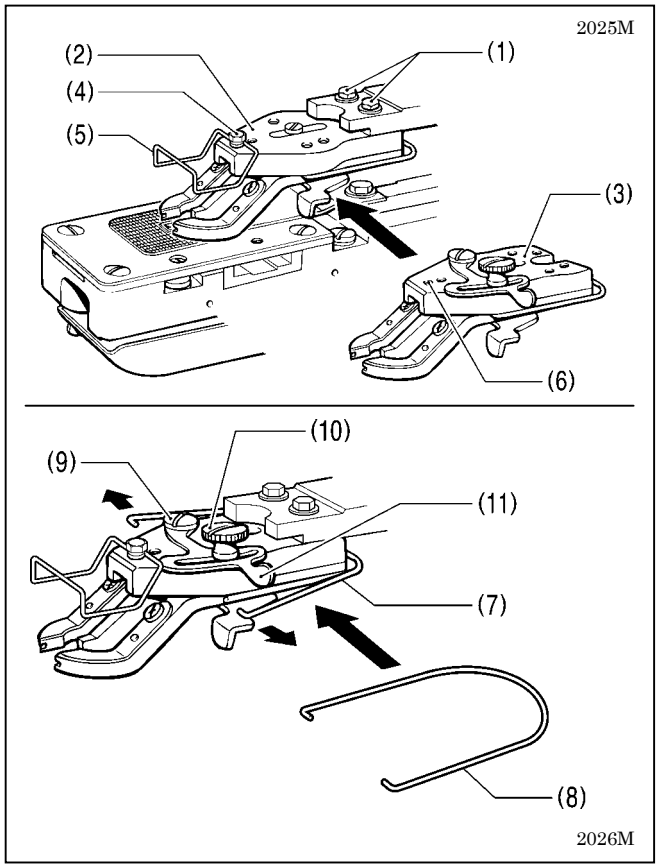

1. Loosen the two bolts (1), and then remove the button clamp assembly (2) that is currently installed.
2. Install the new button clamp assembly (3) with the two bolts (1).
3. Loosen the bolt (4), remove the finger guard (5), and then reattach it to the other screw hole (6) in the button clamp assembly (3).
4. Remove the plate spring (7), and then install the accessory spring (8).
5. Remove the screws (9) and (10), and then remove the button clamp adjust plate (11). (These parts will not be used.)
6. Place a button into the button clamp assembly (3).
7. Adjust the vertical feed lever and the transverse feed plate to match the button thread hole spacing. (Refer to p. 11.)
8. Turn the machine pulley by hand and check that the needle drops into the centers of the button thread holes.
1. If the needle does not drop into the centers of the button thread holes, loosen the bolts (1) and adjust the position of the button clamp assembly (3). After adjusting, tighten the bolts (1).

14. TROUBLESHOOTING

- Please check the following points before calling for repairs or service.
- If the following suggestions do not solve the problem, turn off the machine power supply and contact your nearest Brother service center.

⚠ CAUTION

Turn off the power switch and disconnect the power cord before carrying out troubleshooting.
The machine may operate if the pedal is pressed by mistake, which could result in injury.
* The motor will keep turning even after the power is switched off as a result of the motor's inertia. Wait until the motor stops fully before starting work.

Problem	Possible cause	Page
1. Broken crossover stitch 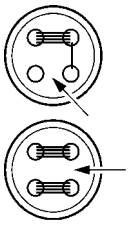 Not enough stitches 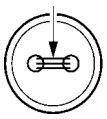 2058M	• Is the main thread tension too strong? Adjust the main thread tension. • Is the sub tension timing too late? Adjust the sub tension timing. • Is an extra fine thread (cotton #80/3S, #70/2S) being used? If using an extra fine thread, pass the thread through only one of the holes in the thread hook. • Is the clearance between the needle and the thread handler too small or too large? Adjust the position of the thread handler. • Is the clearance between the needle and the looper too small? Adjust the position of the looper. • Is the auxiliary tension too weak? Adjust the auxiliary tension. • Is the needle too thin ? Replace the needle with a needle that is one rank thicker.	15 15 8 19 19 16 —
2. Thread frays at final stitch • Stitch is normal. • Thread frays between thread presser tension(1) and material. 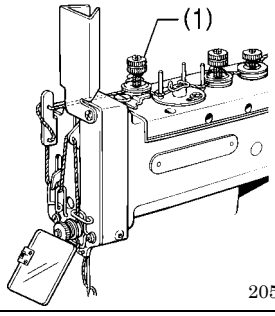 2059M	• Is the thread take-up amount for the thread take-up lever too large? Adjust the position of the thread take-up lever in accordance with the thread being used. • Is the button opener adjusted correctly? Adjust the transverse position and vertical position of the button opener.	10 21
3. Thread frays at stitch joints. (4-hole) (2-hole) • Insufficient thread remainder. • Stitch is too short. 2060M	• Is the main thread tension too strong? Adjust the main thread tension. • Is the thread take-up amount for the thread take-up lever too large? Adjust the position of the thread take-up lever in accordance with the thread being used. • Is the button opener adjusted correctly? Adjust the transverse position and vertical position of the button opener.	15 10 21

Problem	Possible cause	Page
4. Thread breaks • Thread frays and breaks. • Thread breaks at different points. • Thread breaks and stitch skips simultaneously	• Is the needle and looper timing correct? Adjust the height of the needle bar. Adjust the needle and looper timing. • Is the clearance between the needle and the looper too large? Adjust the position of the looper. • Is the clearance between the needle and the needle guide too large? Adjust the position of the needle guide. • Is the presser arm pressure too weak? Adjust the presser arm pressure. • Is the position of the feed plate correct with respect to the needle drop positions? Adjust the installation position of the feed plate. • Is the position of the button clamp assembly correct with respect to the needle drop positions? Adjust the installation position of the button clamp assembly. • Is the material bunching up? Use the feed plate with the projection (1). (1) 2061M	 18 18 19 19 16 24 24 —
5. Thread tightening is loose.	• Is the main thread tension too weak? Adjust the main thread tension. • Is the sub tension timing too early? Adjust the sub tension timing.	 15 15
6. Thread remains in loop at crossover stitch joint (4 hole) (2 hole) 2062M	• Is the main thread tension too strong? Adjust the main thread tension. • Is the sub tension too weak? Turn the nut (1) to adjust the sub tension. (1) • Is the sub tension timing too late? Adjust the sub tension timing. • Has the thread been passed through only one of the holes in the thread hook? Pass the thread through both holes in the thread hook.. 2063M	 15 — 15 10
7. Thread remains in loop on odd stitches (4-hole) (2-hole) 2062M	• Is the clearance between the needle and the thread handler too small? Adjust the position of the thread handler.	 19
8. Thread end not properly wound on the first stitch. (4-hole) (2-hole) 2064M	• Is the thread take-up amount for the rotor too large? Reduce the scale setting for the rotor.	 16

Problem	Possible cause	Page
9. Stitch joint is loose. 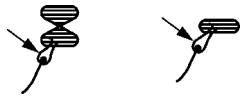 (4-hole) (2-hole) 2065M	• Is the thread take-up amount for the thread take-up lever too small? Adjust the position of the thread take-up lever in accordance with the thread being used. • Is the thread presser tension too weak? Turn the nut (1) to adjust the thread presser tension. 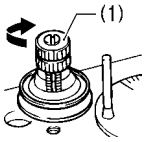 2066M	10 –
10. Intermittent problems with thread tightening 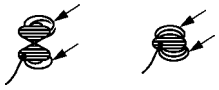 (4-hole) (2-hole) 2067M	• Is the thread getting caught somewhere along the thread path? Check the threading of the thread.	8
11. Stitches skip at sewing start 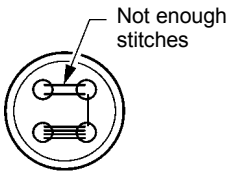 (4-hole) 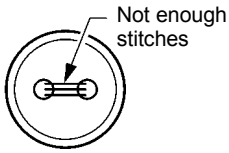 (2-hole) 2068M	• Is the main thread tension too strong? Adjust the main thread tension so that 64-70 mm of thread trails out from the hole in the needle. 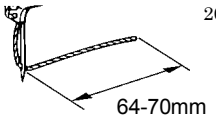 2069M • Is the needle properly installed? If it is incorrect, install the needle correctly. • Is the thread presser tension opening amount too small? Adjust the thread presser tension opening amount. • Is the thread take-up amount for the rotor too small? Increase the scale setting for the rotor. • Are the positions of the feed plate and button clamp correct? Adjust the installation positions of the feed plate and button clamp assembly. • Is the needle and looper timing correct? Adjust the height of the needle bar. Adjust the needle and looper timing. • Is the clearance between the needle and the looper too large? Adjust the position of the looper. • Is the clearance between the needle and the needle guide too large? Adjust the position of the needle guide. • Is the material bunching up? Use the feed plate with the projection (1). 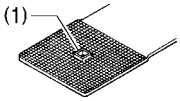 2061M	15 8 15 16 24 18 18 19 19 –
12. Final stitch skips Stitch comes out when the material is removed from the machine.	• Is the needle properly installed? If it is incorrect, install the needle correctly. • Are the positions of the feed plate and button clamp correct? Adjust the installation positions of the feed plate and button clamp assembly. • Is the needle and looper timing correct? Adjust the height of the needle bar. Adjust the needle and looper timing. • Is the clearance between the needle and the looper too large? Adjust the position of the looper. • Is the clearance between the needle and the needle guide too large? Adjust the position of the needle guide.	8 24 18 18 19 19

Problem	Possible cause	Page
13. Thread winds onto looper in machine stop position. 2070M	• Is the auxiliary tension too weak? Adjust the auxiliary tension. • Set the needle drop position to the outside of the button thread hole. 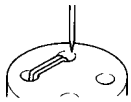 • Is the thread being used too thick? Use a finer thread. • Reduce the number of stitches. 2071M	 16 11 — 13
14. Thread remains on material top at first stitch. 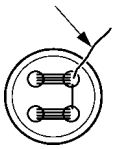 2072M Normal number of stitches	• Is the auxiliary tension too weak? Adjust the auxiliary tension. • Is the thread take-up amount for the rotor too large? Reduce the scale setting for the rotor. • Is the seam uneven (is the material not being fed) at the start of sewing? Increase the presser arm pressure.	 16 16 16
15. Button pops out of the button clamp at the sewing start.	• Does the button size match the button clamp? Use a button clamp that matches the button size. • 10-20 mm buttons: Standard button clamp • 10-30 mm buttons: Optional button clamp	—
16. Broken needles 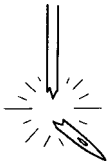 0469M	• Do the needle drop positions match the button thread holes? Adjust the vertical feed lever and the transverse feed plate to match the distance between the button thread holes. • Are the positions of the feed plate and button clamp correct? Adjust the installation positions of the feed plate and button clamp assembly. • Does the button size match the button clamp? Use a button clamp that matches the button size. • 10-20 mm buttons: Standard button clamp • 10-30 mm buttons: Optional button clamp • Is the size of the feed plate hole too small for the needle drop position? Use a feed plate with a larger hole. **Caution** • It is extremely dangerous to leave any pieces of broken needle sticking in the material. If the needle breaks, search for all pieces until the whole of the needle is found again. • Furthermore, we recommend that through steps be taken to account for such needles to comply with product liability regulations.	 11 24 — —
17. Incorrect thread trimming 2073M	• Is the fixed knife or movable knife blunt? Replace the fixed knife or the movable knife. • Is the position of the fixed knife or movable knife correct? Adjust the positions of the fixed knife and movable knife.	 — 22

Problem	Possible cause	Page
18. Button does not drop at the stop position.	• Does the outer diameter of the button match the opening amount for the button clamp? Set a button in place and adjust the size adjust plate. • Is the button opener adjusted correctly? Adjust the transverse position and vertical position of the button opener.	 12 21
19. Machine makes abnormally loud sound when stopping.	• Is the sewing machine operating speed too fast? Use a machine pulley that matches the frequency. • Is the braking force too weak? Adjust the brake.	 3 20
20. Machine stops before the stop position. Button clamp lift stroke is too small. Thread is not cut.	• Is the sewing machine operating speed too slow? Use a machine pulley that matches the frequency. • Is the braking force too strong? Adjust the brake.	 3 20

brother®

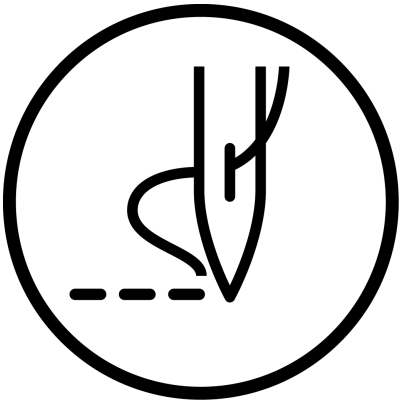

INSTRUCTION MANUAL

BROTHER INDUSTRIES, LTD.
15-1, Naeshiro-cho, Mizuho-ku, Nagoya 467-8561, Japan. Phone: 81-52-824-2177

878-917
SA0723-001
2002.10.B(1)