DA-9270

INSTRUCTION MANUAL

Please read this manual before using the machine.
Please keep this manual within easy reach for quick reference.

TWIN NEEDLE (THREE NEEDLE) FEED OFF THE ARM
DOUBLE CHAIN STITCHER

brother®

Thank you very much for buying a BROTHER sewing machine. Before using your new machine, please read the safety instructions below and the explanations given in the instruction manual.

With industrial sewing machines, it is normal to carry out work while positioned directly in front of moving parts such as the needle and thread take-up lever, and consequently there is always a danger of injury that can be caused by these parts. Follow the instructions from training personnel and instructors regarding safe and correct operation before operating the machine so that you will know how to use it correctly.

SAFETY INSTRUCTIONS

1 Safety indications and their meanings

This instruction manual and the indications and symbols that are used on the machine itself are provided in order to ensure safe operation of this machine and to prevent accidents and injury to yourself or other people.
The meanings of these indications and symbols are given below.

Indications

⚠ **CAUTION**	The instructions which follow this term indicate situations where failure to follow the instructions could cause injury when using the machine or physical damage to equipment and surroundings.

Symbols

..... This symbol (△) indicates something that you should be careful of. The picture inside the triangle indicates the nature of the caution that must be taken.
(For example, the symbol at left means “beware of injury”.)

..... This symbol (⃠) indicates something that you must not do.

..... This symbol (●) indicates something that you must do. The picture inside the circle indicates the nature of the thing that must be done.
(For example, the symbol at left means “you must make the ground connection”.)

2 Notes on safety

⚠ CAUTION

Installation

- Machine installation should only be carried out by a qualified technician.
- Contact your Brother dealer or a qualified electrician for any electrical work that may need to be done.
- The sewing machine weighs more than 49 kg. The installation should be carried out by two or more people.
- Do not connect the power cord until installation is complete, otherwise the machine may operate if the treadle is pressed by mistake, which could result in injury.
- Be sure to connect the ground. If the ground connection is not secure, you run the risk of receiving a serious electric shock.
- All cords should be secured at least 25 mm away from any moving parts. Furthermore, do not excessively bend the cords or secure them too firmly with staples, otherwise there is the danger that fire or electric shocks could occur.
- Install the belt covers to the machine head and motor.
- If using a work table which has casters, the casters should be secured in such a way so that they cannot move.
- Be sure to wear protective goggles and gloves when handling the lubricating oil, so that no oil gets into your eyes or onto your skin, otherwise inflammation can result.
  Furthermore, do not drink the oil under any circumstances, as it can cause vomiting and diarrhoea.
  Keep the oil out of the reach of children.

CAUTION

Sewing

- This sewing machine should only be used by operators who have received the necessary training in safe use beforehand.
- The sewing machine should not be used for any applications other than sewing.
- Attach all safety devices before using the sewing machine. If the machine is used without these devices attached, injury may result.
- Do not touch any of the moving parts or press any objects against the machine while sewing, as this may result in personal injury or damage to the machine.
- Turn off the power switch at the following times, the machine may operate if the treadle is pressed by mistake, which could result in injury.
  - When threading the needle
  - When replacing the needle
  - When not using the machine and when leaving the machine unattended
- If using a work table which has casters, the casters should be secured in such a way so that they cannot move.
- If an error occurs in machine, or if abnormal noises or smells are noticed, immediately turn off the power switch. Then contact your nearest Brother dealer or a qualified technician.
- If the machine develops a problem, contact your nearest Brother dealer or a qualified technician.

Cleaning

- Turn off the power switch before carrying out cleaning. The motor will keep turning even after the power is switched off as a result of the motor's inertia. Wait until the motor stops fully before starting work.
  The machine may operate if the treadle is pressed by mistake, which could result in injury.
- Be sure to wear protective goggles and gloves when handling the lubricating oil, so that no oil gets into your eyes or onto your skin, otherwise inflammation can result.
  Furthermore, do not drink the oil under any circumstances, as it can cause vomiting and diarrhoea.
  Keep the oil out of the reach of children.

Maintenance and inspection

- Maintenance and inspection of the sewing machine should only be carried out by a qualified technician.
- Ask your Brother dealer or a qualified electrician to carry out any maintenance and inspection of the electrical system.
- Turn off the power switch and disconnect the power cord from the wall outlet at the following times, otherwise the machine may operate if the treadle is pressed by mistake, which could result in injury.
  However, the motor will keep turning even after the power is switched off as a result of the motor's inertia. Wait until the motor stops fully before starting work.
  - When carrying out inspection, adjustment and maintenance
  - When replacing consumable parts such as the looper
- If the power switch needs to be left on when carrying out some adjustment, be extremely careful to observe all safety precautions.
- Use only the proper replacement parts as specified by Brother.
- If any safety devices have been removed, be absolutely sure to re-install them to their original positions and check that they operate correctly before using the machine.
- Any problems in machine operation which result from unauthorized modifications to the machine will not be covered by the warranty.

3 Warning labels

★ The following warning labels appear on the sewing machine.
Please follow the instructions on the labels at all times when using the machine. If the labels have been removed or are difficult to read, please contact your nearest Brother dealer.

1

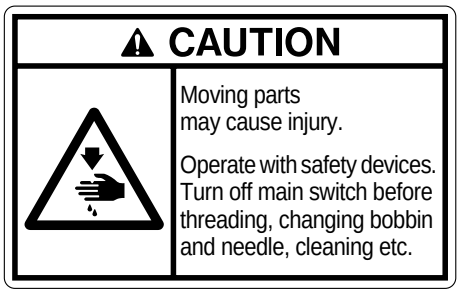

2

Be sure to connect the ground.
If the ground connection is not secure, you run the risk of receiving a serious electric shock.

3 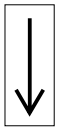

Direction of operation

Safety devices
❶ Finger guard
❷ Thread take-up cover
❸ Pulley cover, etc.

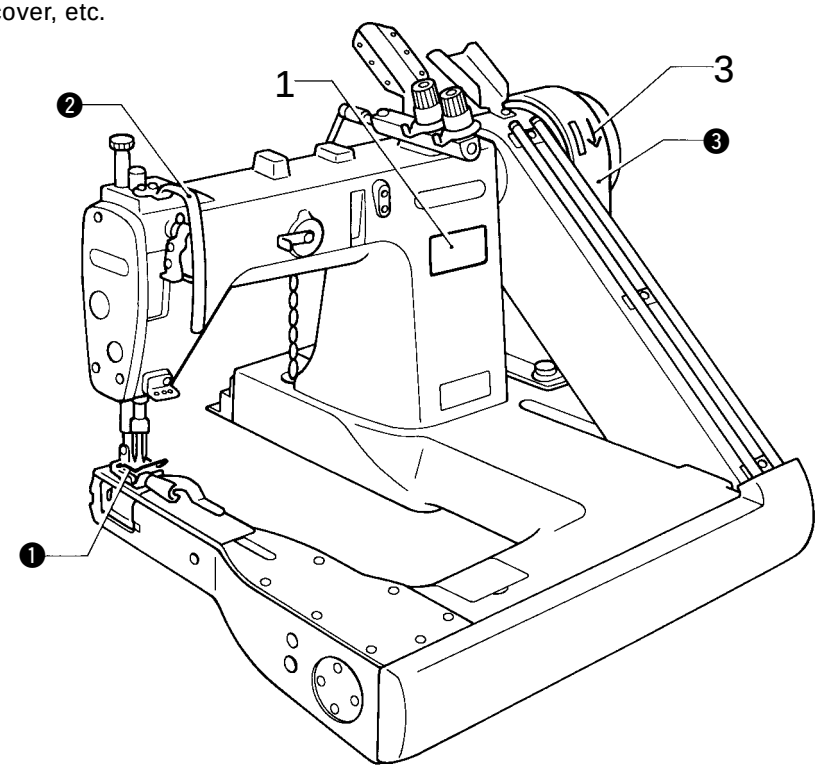

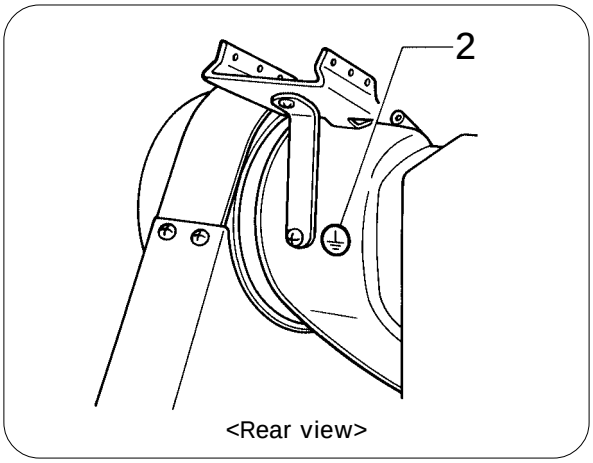

CONTENTS

1. NAMES OF MAJOR PARTS 1
2. MACHINE SPECIFICATIONS 1
3. WORK TABLE AND MOTOR 2
4. INSTALLATION 3
   - 4-1. Installing the machine head 3
   - 4-2. Ground wire connections 4
   - 4-3. Installing the pulley cover 5
   - 4-4. Belt tension adjustment 6
   - 4-5. Cotton stand 6
   - 4-6. Lubrication 7
   - 4-7. Checking the machine pulley rotating direction 8
5. PREPARATION BEFORE SEWING 8
   - 5-1. Needles and threads 8
   - 5-2. Installing the needles 8
   - 5-3. Threading the lower threads 9
   - 5-4. Threading the upper threads 9
6. SEWING 10
   - 6-1. Sewing 10
7. THREAD TENSION 11
   - 7-1. Adjusting the thread tension 11
   - 7-2. Presser foot pressure adjustment 11
   - 7-3. Adjusting the stitch length 12
   - 7-4. Puller feed adjustment (Machines with puller) 12
8. CLEANING 14
   - 8-1. Daily cleaning 14
   - 8-2. Changing the lubricating oil (every three months) 14
9. STANDARD ADJUSTMENTS 15
   - 9-1. Needle bar height adjustment 15
   - 9-2. Needle and looper timing adjustment 16
   - 9-3. Timing of loopers running clear of needles 17
   - 9-4. Needle guard adjustment 17
   - 9-5. Feed dog height adjustment 18
   - 9-6. Upper thread take-up thread guide adjustment 19
   - 9-7. Upper thread arm thread guide adjustment 19
   - 9-8. Thread release shaft adjustment 19
   - 9-9. Lower thread take-up timing adjustment 19
   - 9-10. Installing the lapper 20
   - 9-11. Puller height adjustment (Machines with puller) 20
   - 9-12. Puller device timing adjustment (Machines with puller) 20
10. TROUBLESHOOTING 21

1. NAMES OF MAJOR PARTS

❶ Machine pulley
❷ Front cover
❸ Presser
❹ Needle bar
❺ Upper thread arm guide
❻ Lapper

Safety device
❼ Thread take-up cover
❽ Finger guard
❾ Pulley cover

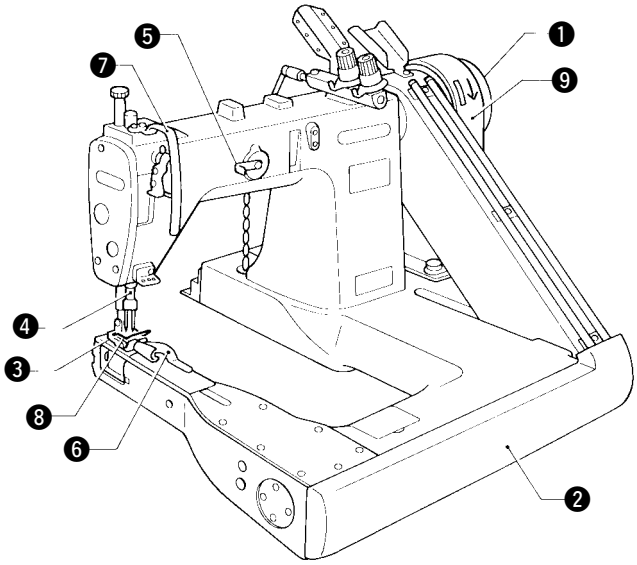

2. MACHINE SPECIFICATIONS

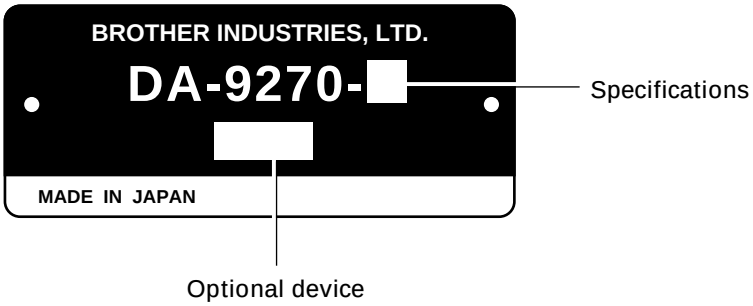

Specifications	-1	-2	-3	-A	
Applications	Light materials	Light - medium materials	Medium materials	Light materials, with puller	
No. of needles	2	2	2	2	3
Needle TV X 64	#12	#14	#16	#11PSU	
Needle gauge	4.8 mm (3/16) 6.4 mm (1/4)	3.2 mm (1/8) 4.0 mm (5/32) 4.8 mm (3/16)	6.4 mm (1/4)	4.8 mm (3/16) 6.4 mm (1/4)	6.4 mm (1/4)
Max. stitch length	3.0 mm		3.5 mm	3.0 mm	
Min. arm size	171 mm				
Max. sewing speed	4,000 rpm			3,600 rpm	

3. WORK TABLE AND MOTOR

■ Work Table

If using a commercially-available table

- The top of the table should be 40 mm in thickness and should be strong enough to hold the weight and withstand the vibration of the sewing machine.
- Drill holes as indicated in the illustration below.

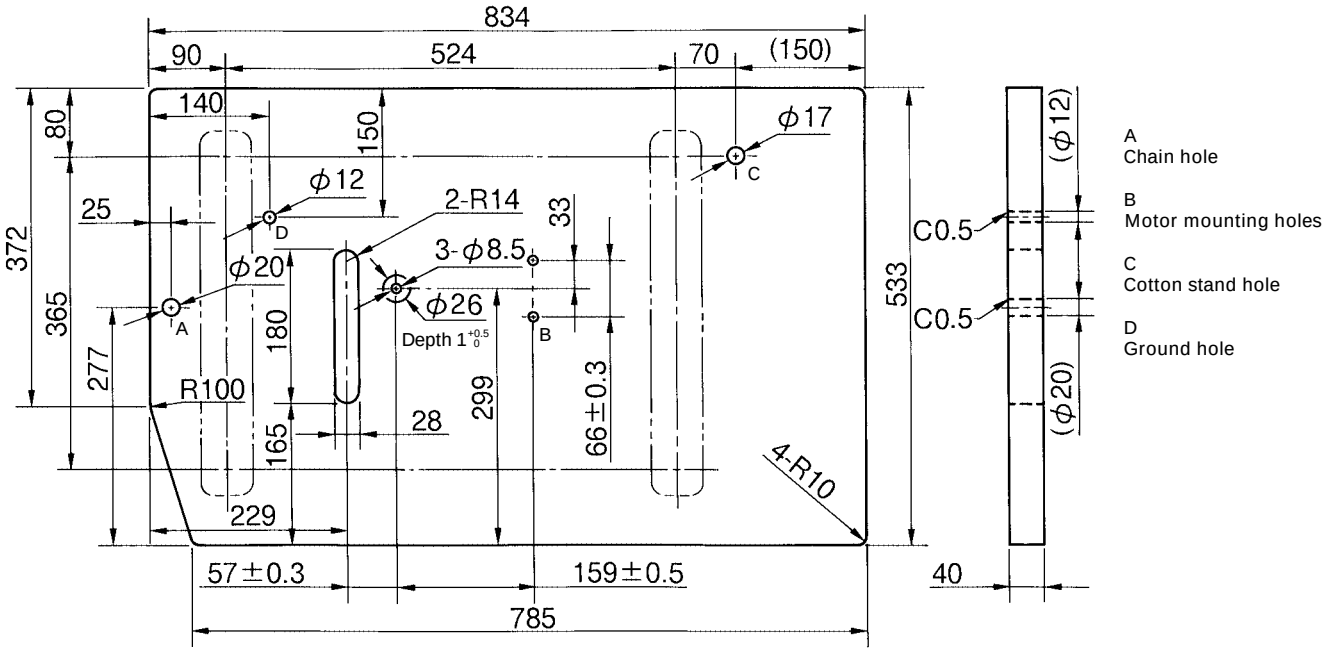

■ Motor

⚠ CAUTION

- All cords which are connected to the motor should be secured at least 25 mm away from any moving parts. Furthermore, do not excessively bend the cords or secure them too firmly with staples, otherwise there is the danger that fire or electric shocks could occur.
- Install the correct belt cover which corresponds to the motor being used.

<Motor>

- Select the correct motor from those listed in the above table.
- Refer to the instruction manual for the motor for details on installing and using the motor.

Power	Motor
Single-phase	2-pole, 400 W motor
Three-phase	2-pole, 400 W motor

<Motor pulley and V-belt>

- Refer to the table below to select the motor pulley and belt combination.
- The belt should be an M-type V-belt.

Pulley O.D.		65	70	75	80	85	90	95	100
Belt size (inches)		M42			M43			M44	
Sewing speed (rpm)	50Hz				3100		3600		4000
	60Hz	3100		3600		4000			

4. INSTALLATION

⚠ CAUTION

- The sewing machine should only be installed by a qualified technician.
- Ask your Brother dealer or a qualified electrician for any electrical work that may need to be done.
- The sewing machine weighs more than 49 kg. The installation should be carried out by two or more people.
- Do not connect the power cord until installation is complete, otherwise the machine will operate if the treadle is pressed by mistake, which could result in injury.
- Be sure to connect the ground. If the ground connection is not secure, serious electric shocks will result.
- Install the pulley cover to the machine head.

4-1. Installing the machine head

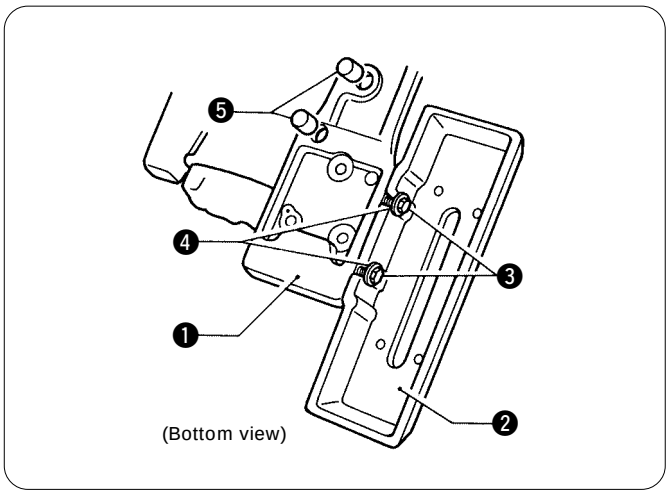

1. Install pulley cover base ❷ on machine bed ❶ with two hexagonal bolts ❸ and two washers ❹.
2. Insert two bar cushions ❺ into the holes in the bottom of the bed.

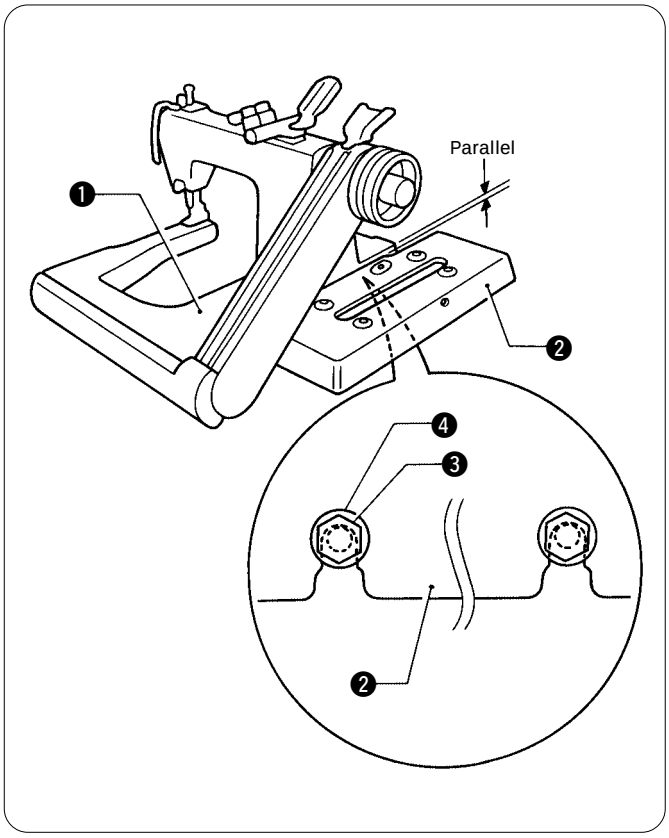

* At this time, install the two hexagonal bolts ❸ so that they go as far as possible into the notches in the pulley cover base ❷.
Furthermore, check that the pulley cover base ❷ is parallel to the bed. (If it is not parallel, the pulley cover may touch the machine pulley.)

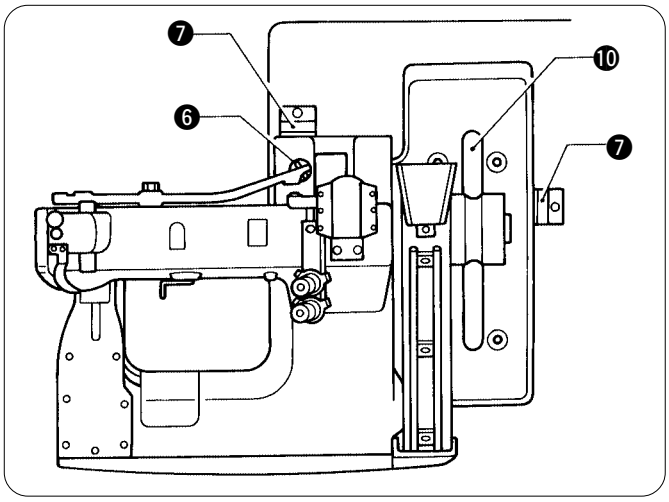

3. Place the machine head on the table, adjust its position in forward and backward directions by aligning it with the hole for presser bar lifter chain ❻, and in sidewise directions by aligning it with belt hole ❿.

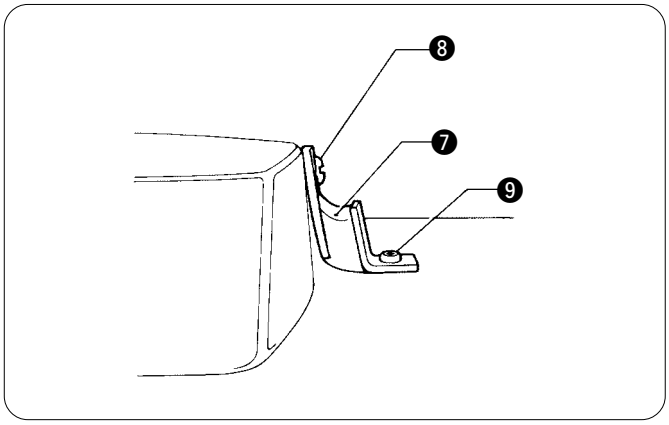

4. After fastening cushions ❼ to the machine bed and pulley cover base with set screws ❽, fix them to the table with screws ❾.
   * Place the work table so that the machine head is horizontal.
     If the machine head is not horizontal, lubrication will not be carried out correctly.

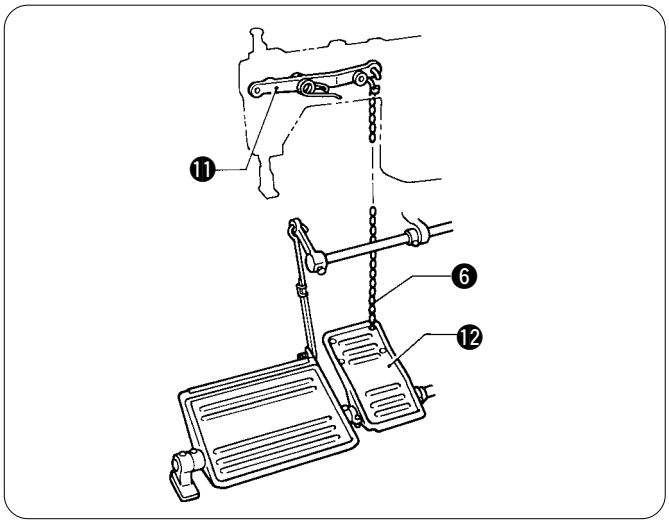

5. Connect the presser bar lifter chain ❻ to the knee lifter lever ⓫ and the presser lifter pedal ⓬.

4-2. Ground wire connections

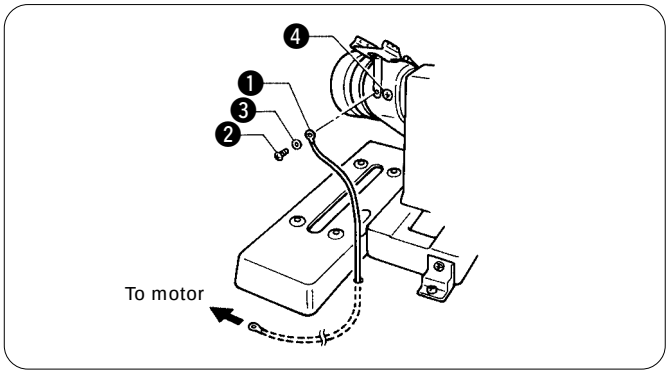

Connect the ground wire to the sewing machine head and motor.
(Use the correct type of ground wire and washer.)

1. Remove lower thread guide holder screw ❷.
2. Secure the ground wire ❶ to the sewing machine head with screw ❷ and washer ❸.
   (The attachment location is indicated by a ground symbol ❹.)
3. Pass the ground wire ❶ through the hole in the table.
4. Connect the ground wire ❶ to the motor in accordance with the instructions in the instruction manual for the motor.

4-3. Installing the pulley cover

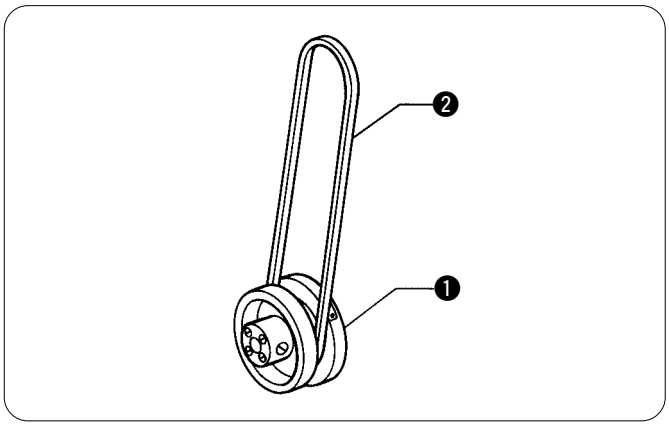

1. Place the belt ❷ onto the machine pulley ❶.
   * Pull the belt ❷ upward when installing pulley cover A ❸.

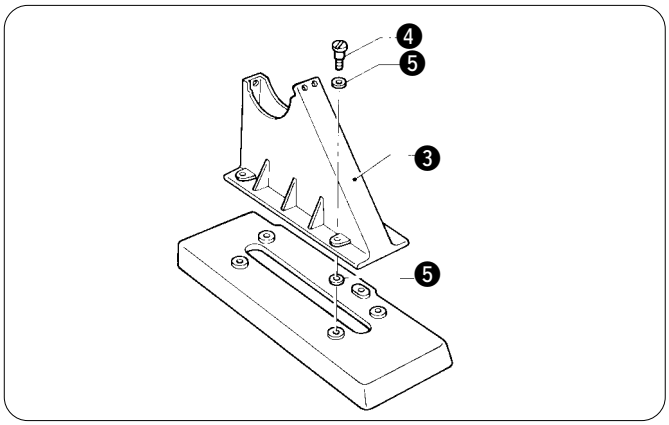

2. Place pulley cover A ❸ so that it is in between the eight pulley cover seats ❺, and then secure it to the pulley cover base with the four screws ❹.

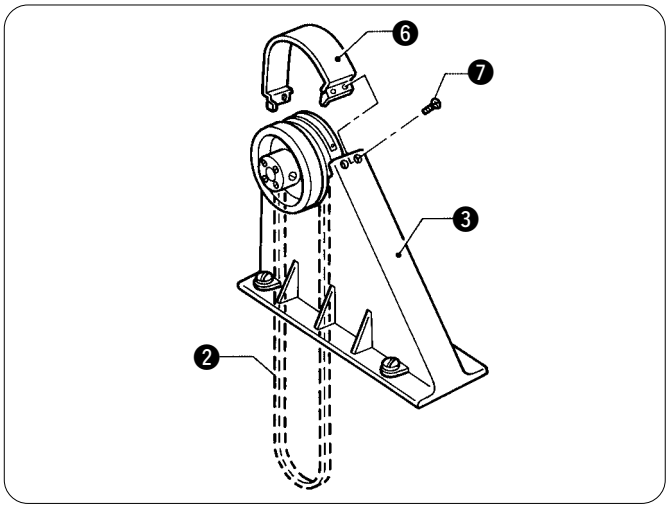

3. Push the belt ❷ downward, and then install pulley cover B ❻ to pulley cover A ❸ with the three screws ❼.

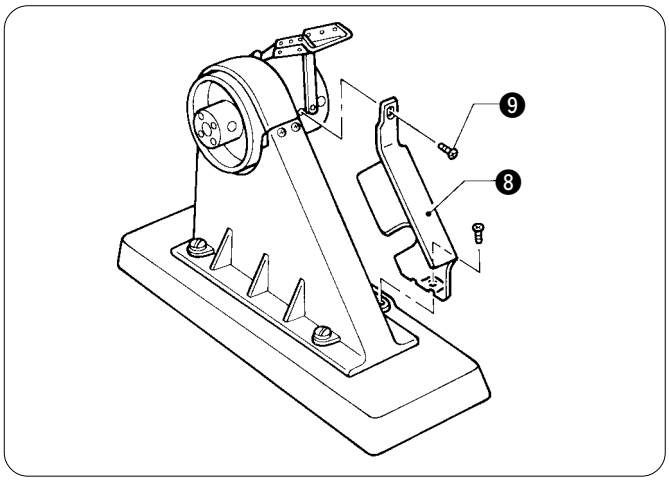

4. If the machine is being used with the puller attached, install the puller belt cover ❽ with the two screws ❾.

4-4. Belt tension adjustment

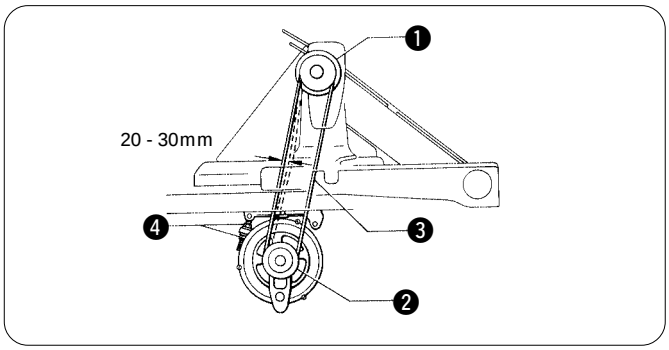

1. Place the V-belt ❸ onto the motor pulley ❷.
2. Turn the two nuts ❹ to adjust so that there is 20 - 30 mm of deflection in the V-belt ❸ when it is pressed at the midway point with a force of 9.8 N.

4-5. Cotton stand

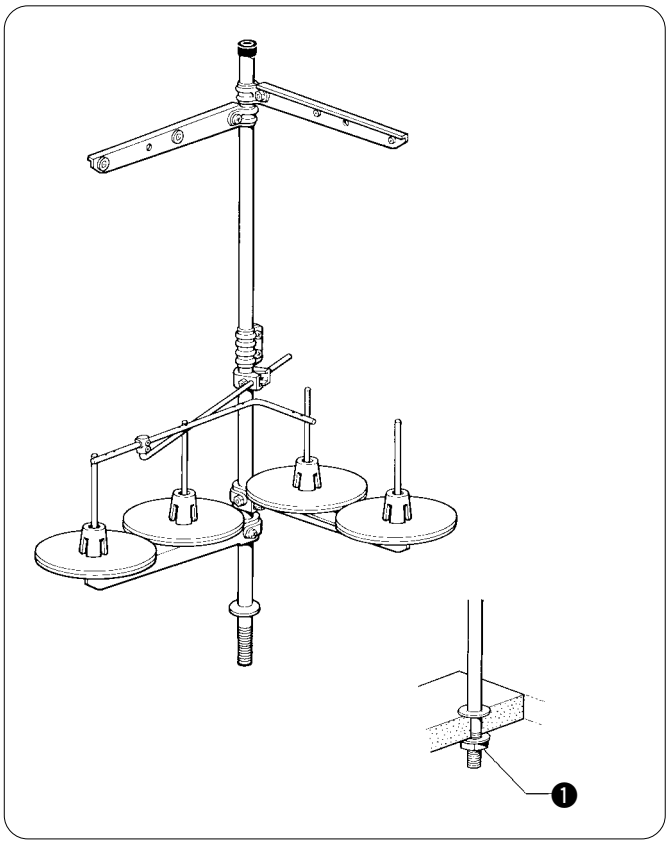

1. Assemble the cotton stand while referring to the cotton stand instruction manual.
2. Install the cotton stand to the cotton stand mounting hole in the work table with the nut ❶.

4-6. Lubrication

CAUTION

- Be sure to wear protective goggles and gloves when handling the lubricating oil, so that no oil gets into your eyes or onto your skin, otherwise inflammation can result.
  Furthermore, do not drink the oil under any circumstances, as it can cause vomiting and diarrhoea.
  Keep the oil out of the reach of children.

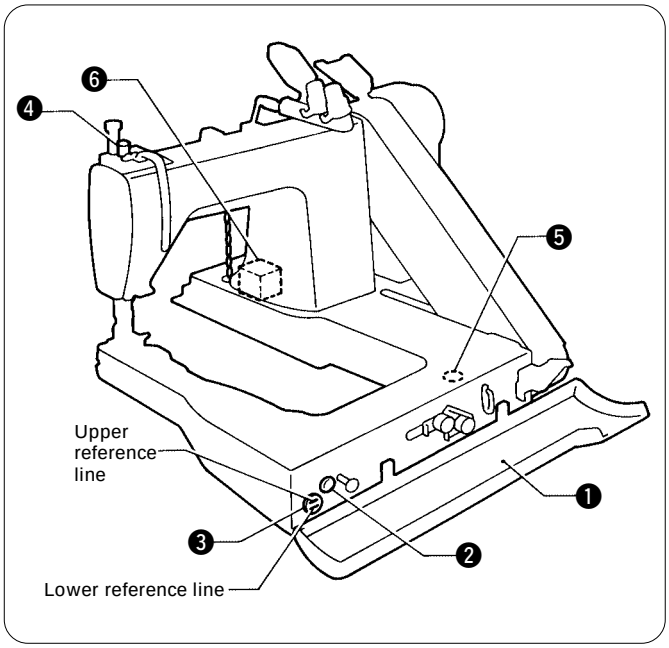

- The sewing machine should always be lubricated and the oil supply replenished before it is used for the first time, and also after long periods of non-use.

★ Use only the lubricating oil (Nisseki Mitsubishi Sewing Lube 15N; VG15) specified by Brother.

1. Open the front cover ❶, remove the rubber plug ❷, and then fill with oil until the oil level reaches the point in between the reference lines on the oil gauge ❸.
   * If the oil level drops to the lower reference line, be sure to add more oil.
2. Insert the rubber plug ❷ and then close the front cover ❶.
3. Add 1 - 2 drops of oil once a week to needle bar bracket lubrication hole ❹.
4. Periodically loosen the oil drain screw ❺ to drain out any oil which collects in the front bed oil sump. After draining the oil, tighten the oil drain screw ❺.
5. Periodically wipe away any oil which collects in the rear bed oil sump ❻ with a cloth.

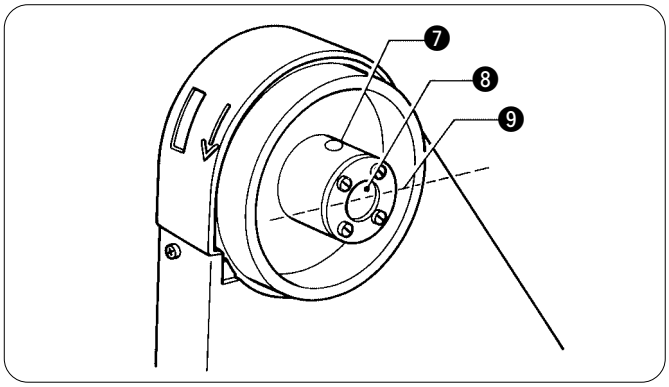

6. Turn the machine pulley, so that the oil hole cover ❼ is facing upward, and then remove the oil hole cover ❼ and fill the oil tank ❽ with oil.
   If the level of lubricating oil drops below the middle reference line ❾ on the oil tank, no oil will be drawn into the upper shaft, and the upper shaft will thus not be lubricated sufficiently. Be sure to maintain the lubricating oil level at a level above the center reference line.
7. Attach the oil hole cover ❼.

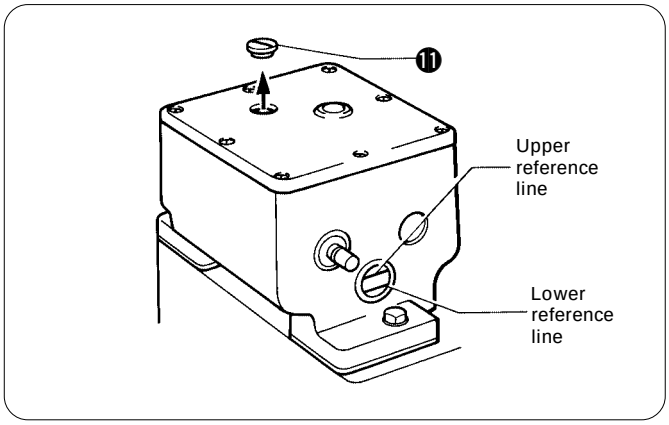

* If the machine is being used with the puller attached, remove the cover screws ⓫ and fill with oil until the level reaches the upper reference line in the oil sight glass.
* If the oil level drops to the lower reference line, be sure to add more oil.
  After lubrication is completed, tighten the cover screws ⓫.

4-7. Checking the machine pulley rotating direction

CAUTION

- Do not touch any of the moving parts or place any objects against the machine while sewing, as this may result in personal injury or damage to the machine.

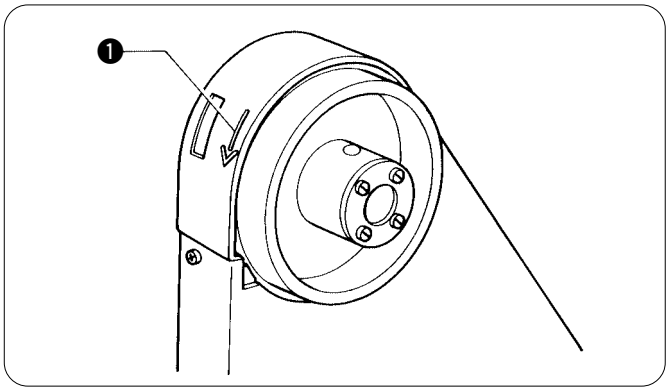

1. Insert the power cord plug into the wall outlet, and then turn on the power switch.
2. Depress the treadle slightly and check that the machine pulley starts to turn in the direction of the arrow ❶.
   * If the direction of rotation is reversed, change the direction of rotation to the correct direction while referring to the instruction manual for the motor.
   * For the first 3 - 4 days of use, run the machine at 500 rpm lower than the usual speed. This will help contribute to a longer service life for the machine.

5. PREPARATION BEFORE SEWING

5-1. Needles and threads

The needle and threads to be used vary depending on sewing conditions. Select the correct ones by referring to the table below.

Needle	Thread	
	Upper thread	Lower thread
ORGAN TV×64 #11 #12	spun yarn #80	spun yarn #80
#14	spun yarn #60	spun yarn #60
#16	spun yarn #50	spun yarn #50

5-2. Installing the needles

CAUTION

- Turn off the power switch before installing the needle, otherwise the machine may operate if the treadle is pressed by mistake, which could result in injury.

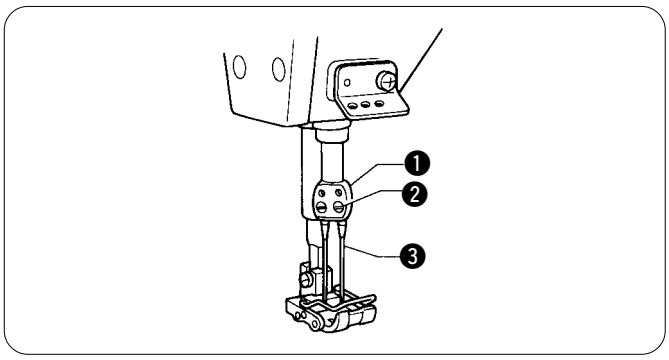

1. Turn the pulley until needle holder ❶ is raised to the highest position.
2. Loosen needle set screws ❷, hold needles ❸ with their long grooved side facing front, insert them into needle holder ❶ all the way, and fasten the needle with needle set screws ❷.

5-3. Threading the lower threads

CAUTION

- Turn off the power switch before threading the upper thread, otherwise the machine may operate if the treadle is pressed by mistake, which could result in injury.

Pass the lower threads as shown in the figure below.

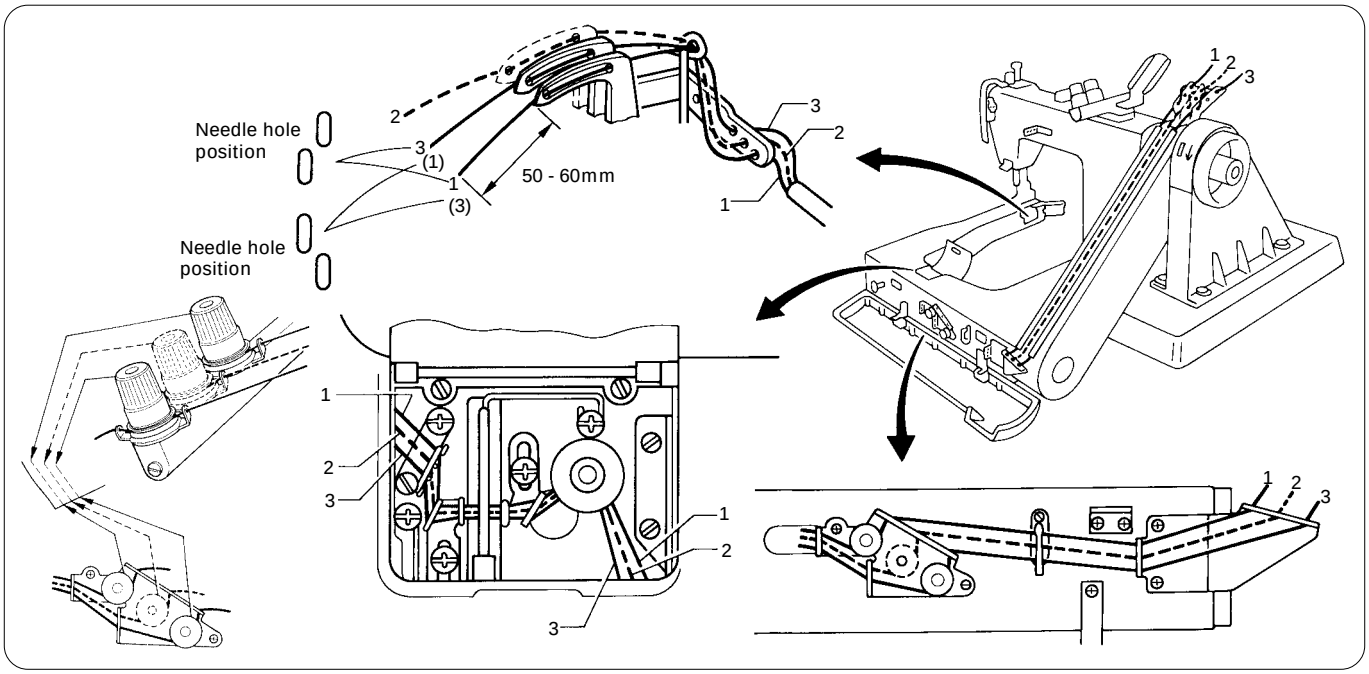

5-4. Threading the upper threads

CAUTION

- Turn off the power switch before threading the upper thread, otherwise the machine may operate if the treadle is pressed by mistake, which could result in injury.

Pass the upper threads as shown in the figure below.

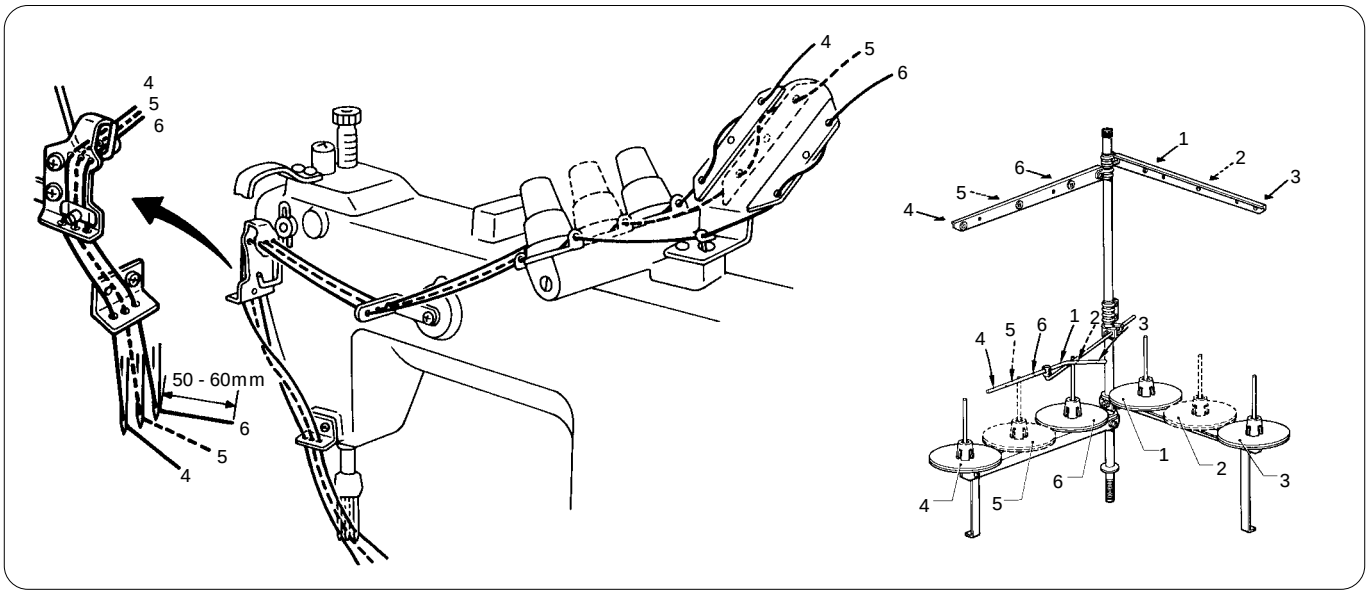

6. SEWING

⚠ CAUTION

- Attach all safety devices before using the sewing machine. If the machine is used without these devices attached, injury may result.
- Turn off the power switch at the following times, otherwise the machine may operate if the treadle is pressed by mistake, which could result in injury.
  - When threading the needle
  - When replacing the needle
  - When not using the machine and when leaving the machine unattended
- Do not touch any of the moving parts or place any objects against the machine while sewing, as this may result in personal injury or damage to the machine.

6-1. Sewing

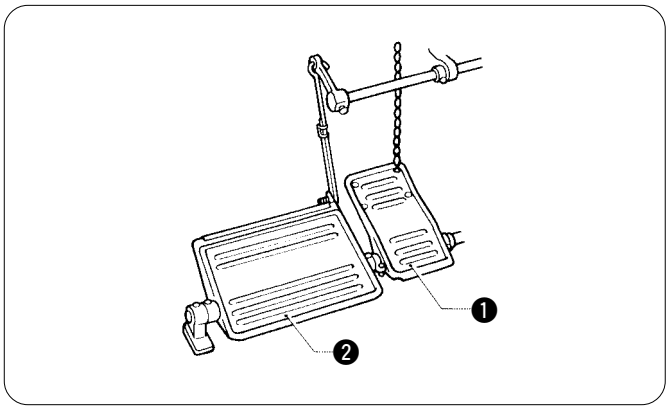

1. Switch the power on.
2. Depress presser lifter pedal ❶ and place the work under the presser foot.
3. Release the presser lifter pedal.
4. The machine starts running when treadle ❷ is stepped down.

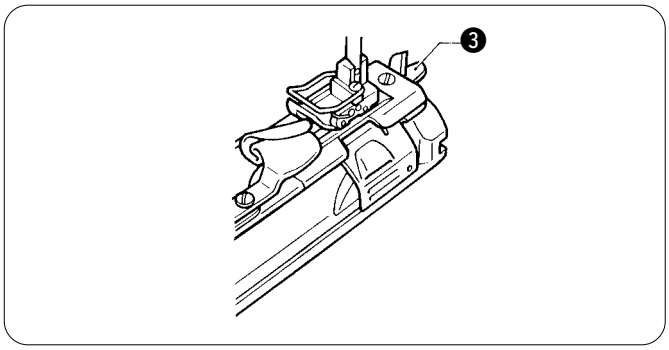

5. After sewing the work, move the work to thread cutter ❸ to make blank stitches, and cut the thread with it.

7. THREAD TENSION

7-1. Adjusting the thread tension

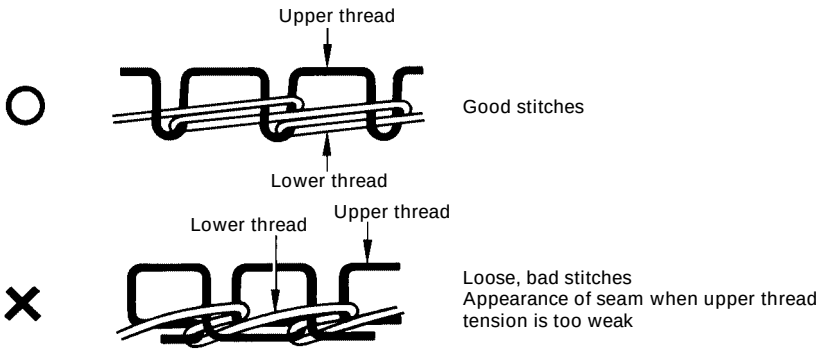

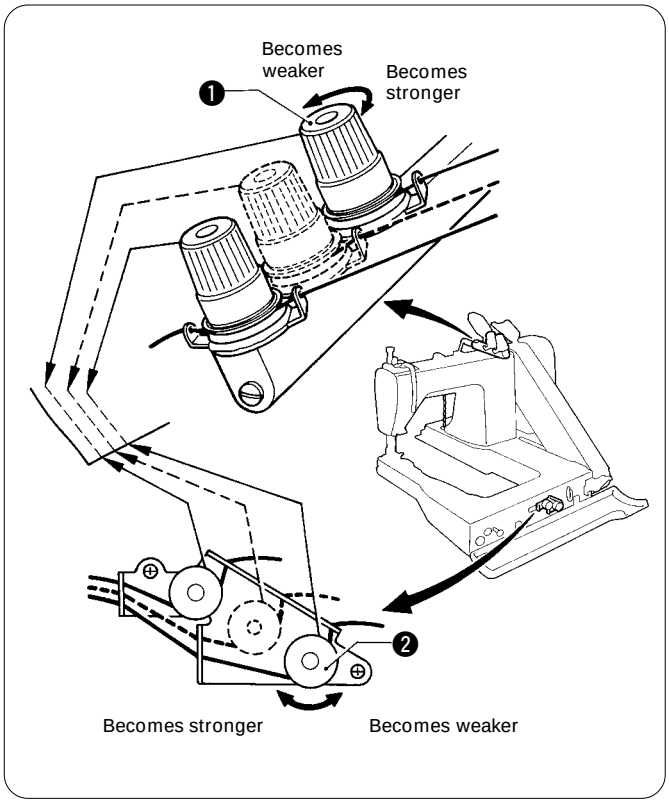

1. Adjust the upper thread tension properly by turning upper thread adjusting screw ❶.
2. Adjust the lower thread tension properly by turning lower thread adjusting screw ❷.

7-2. Presser foot pressure adjustment

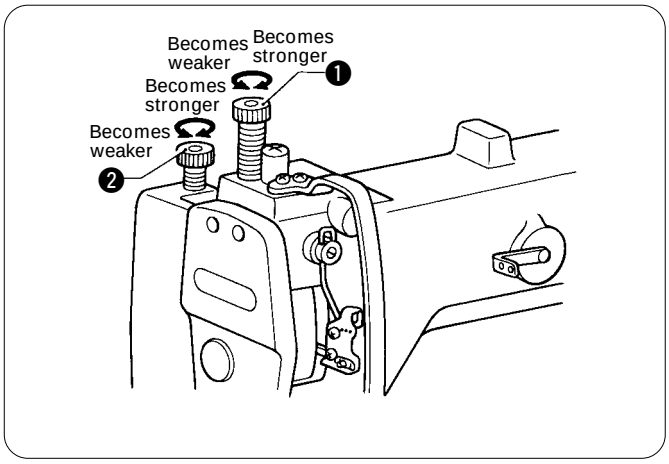

Adjust the presser foot pressure by turning presser adjusting screw ❶ so that the pressure is just enough to feed the work positively and keep the work from slipping.

* In case of Machines with puller the puller pressure can be adjusted as appropriate to the work by turning presser adjusting screw ❷.

7-3. Adjusting the stitch length

CAUTION

- Turn off the power supply before adjusting the stitch length, otherwise the machine will operate if the treadle is pressed by mistake, which could result in injury.
  However, the motor will keep turning even after the power is switched off as a result of the motor's inertia. Wait until the motor stops fully before starting work.

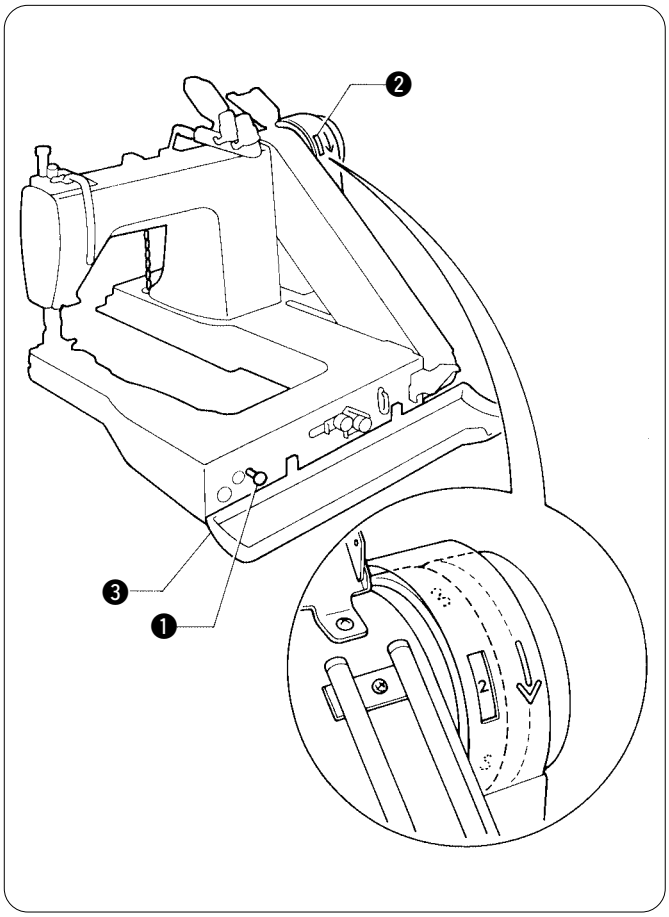

- The numerals on the machine pulley scale represent the stitch length (mm), however the actual stitch length will vary depending on the type and thickness of material being used.

1. Open the front cover ❸.
2. While pressing the feed adjustment button ❶, turn the machine pulley toward you slowly. (The feed adjustment button ❶ will move further inward.)
3. While still pressing the feed adjustment button ❶, keep turning the machine pulley until the desired numeral appears in the center of the pulley cover windows ❷.
   * The higher the value of the numeral, the larger the stitch length becomes.
     Release the feed adjustment button ❶.
     (Check that the feed adjustment button ❶ pops back out again.)
4. Close the front cover ❸.

NOTE:
Do not press the feed adjustment button ❶ while the machine is operating, as doing so may damage the machine parts.
When sewing with the stitch length set close to the maximum length, you will need to adjust the needle guard in accordance with the type of material and the type of thread being used.

7-4. Puller feed adjustment (Machines with puller)

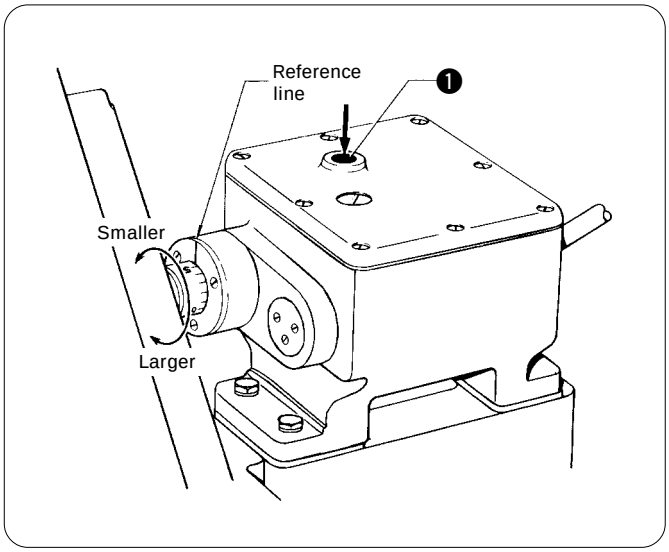

1. With feed adjusting button ❶ lightly pressed with your finger, turn the pulley toward yourself until feed adjusting button ❶ goes in one step deeper.
2. Keep pressing feed adjusting button ❶, and turn the pulley to set your desired feed position on the scale to the reference line.
   The more your turn the pulley toward yourself, the smaller will be the feed.
   * Adjust the puller feed after seeing the finished stitches of the work (Refer to page 13).

★ The table below shows samples of stitches made with a highly elastic fabric and a fabric which is not so elastic. Adjust the puller feed by referring to this table.

Puller feed	Fabric with high elasticity	Fabric with low elasticity
Correct	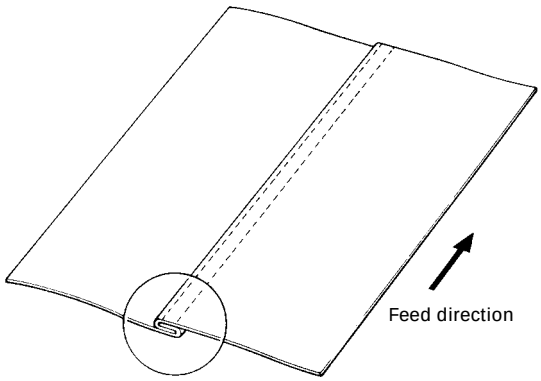 Neither non-alignment nor sewing wrinkles.	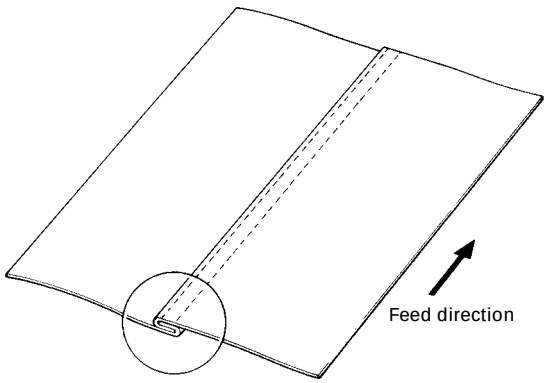 Neither non-alignment nor sewing wrinkles.
Insufficient	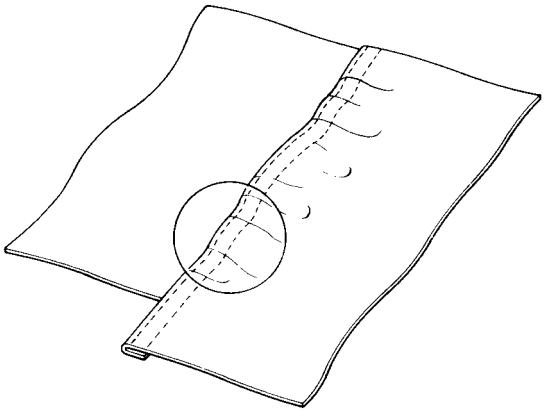 Non-aligned, and wrinkled.	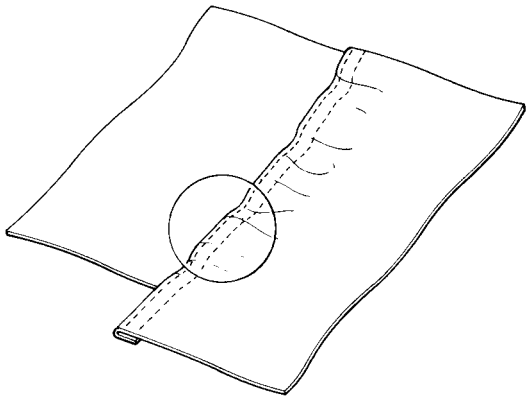 Non-aligned, and wrinkled.
Excessive	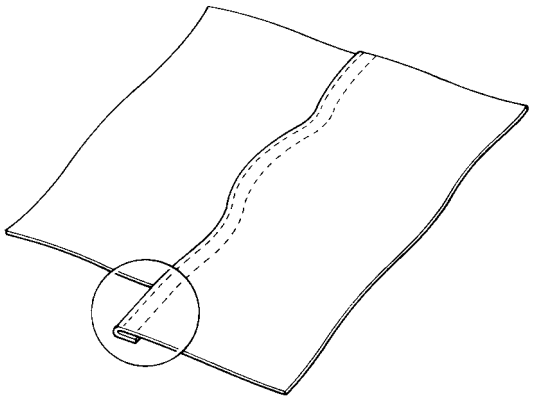 Non-aligned, and very wavy.	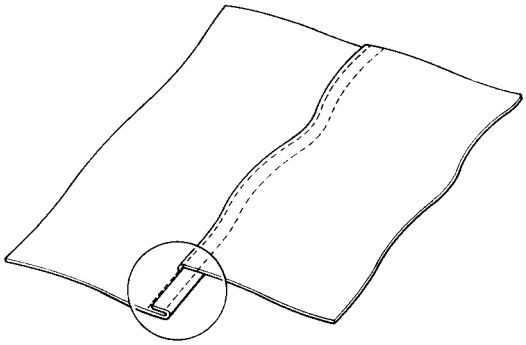 Non-aligned, and very wavy.

8. CLEANING

The following cleaning operations should be carried out each day in order to maintain the performance of this machine and to ensure a long service life.

⚠ CAUTION

- Turn off the power switch before carrying out cleaning. The motor will keep turning even after the power is switched off as a result of the motor's inertia. Wait until the motor stops fully before starting work. The machine may operate if the treadle is pressed by mistake, which could result in injury.

- Be sure to wear protective goggles and gloves when handling the lubricating oil, so that no oil gets into your eyes or onto your skin, otherwise inflammation can result.

Furthermore, do not drink the oil under any circumstances, as it can cause vomiting and diarrhoea.
Keep the oil out of the reach of children.

8-1. Daily cleaning

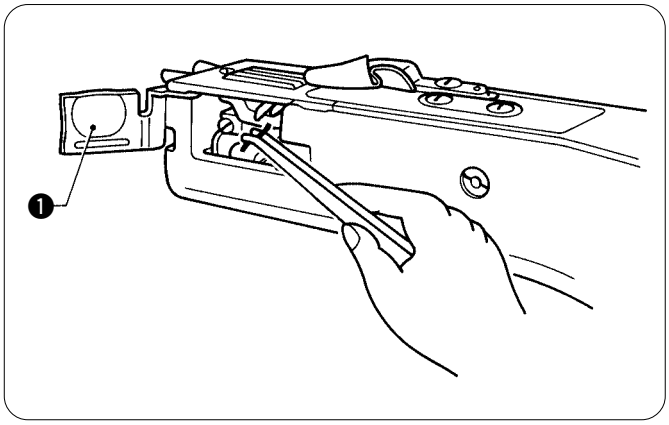

■ **Cleaning the machine**

1. Open the looper side plate ❶ and clean away any thread scraps and other rubbish.
2. After cleaning, close the looper side plate ❶.

■ **Lubrication**

Refer to "4-6. Lubrication" on page 7.

■ **Checking**

1. Check that the threads are threaded correctly. (Refer to page 9.)
2. If the tips of the needles are broken, replace the broken needles.
3. Carry out a trial sewing.

8-2. Changing the lubricating oil (every three months)

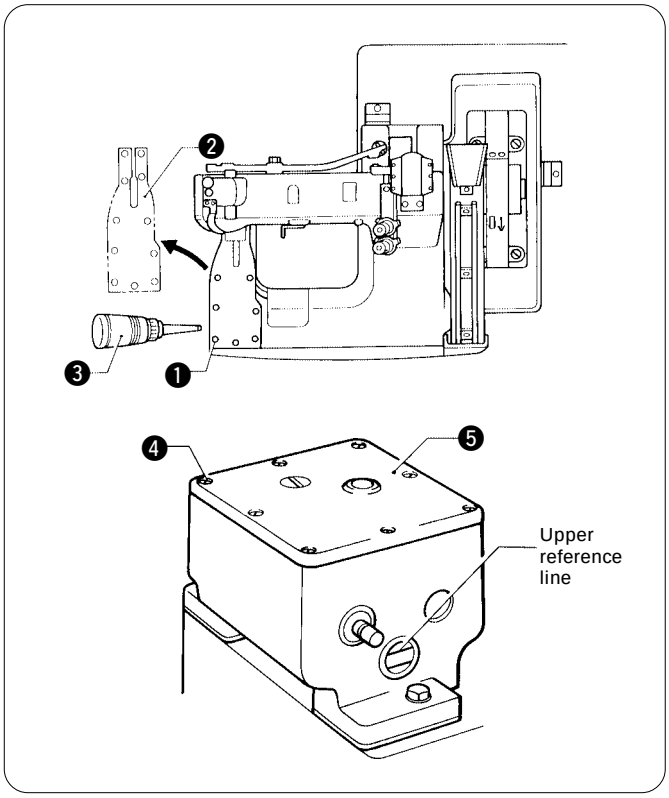

The lubricating oil should be changed at least once every three months.

1. Remove the 11 screws ❶, and then open the forward feed arm cover ❷.
2. Draw up all of the lubricating oil inside the machine into the oil bottle ❸.
3. Fill the machine with oil until the oil level reaches the point in between the reference lines on the oil gauge. (Refer to page 7.)
4. Close the forward feed arm cover ❷ and secure it with the 11 screws ❶.

[Machines with puller]

1. Remove the eight screws ❹, and then open the puller top cover ❺.
2. Draw up all of the lubricating oil inside the machine into the oil bottle ❸.
3. Fill the machine with oil until the oil level reaches the top reference line on the oil gauge. (Refer to page 7.)
4. Close the puller top cover ❺ and secure it with the eight screws ❹.

9. STANDARD ADJUSTMENTS

⚠ CAUTION

- Maintenance and inspection of the sewing machine should only be carried out by qualified personnel.
- Ask your Brother dealer or a qualified electrician to carry out any maintenance and inspection of the electrical system.
- Turn off the power switch and disconnect the power cord from the wall outlet at the following times, otherwise the machine may operate if the treadle is pressed by mistake, which could result in injury.
  However, the motor will keep turning even after the power is switched off as a result of the motor's inertia. Wait until the motor stops fully before starting work.
  - When carrying out inspection, adjustment and maintenance
  - When replacing consumable parts such as the looper
- If the power switch needs to be left on when carrying out some adjustment, be extremely careful to observe all safety precautions.
- If any safety devices have been removed, be absolutely sure to re-install them to their original positions and check that they operate correctly before using the machine.

9-1. Needle bar height adjustment

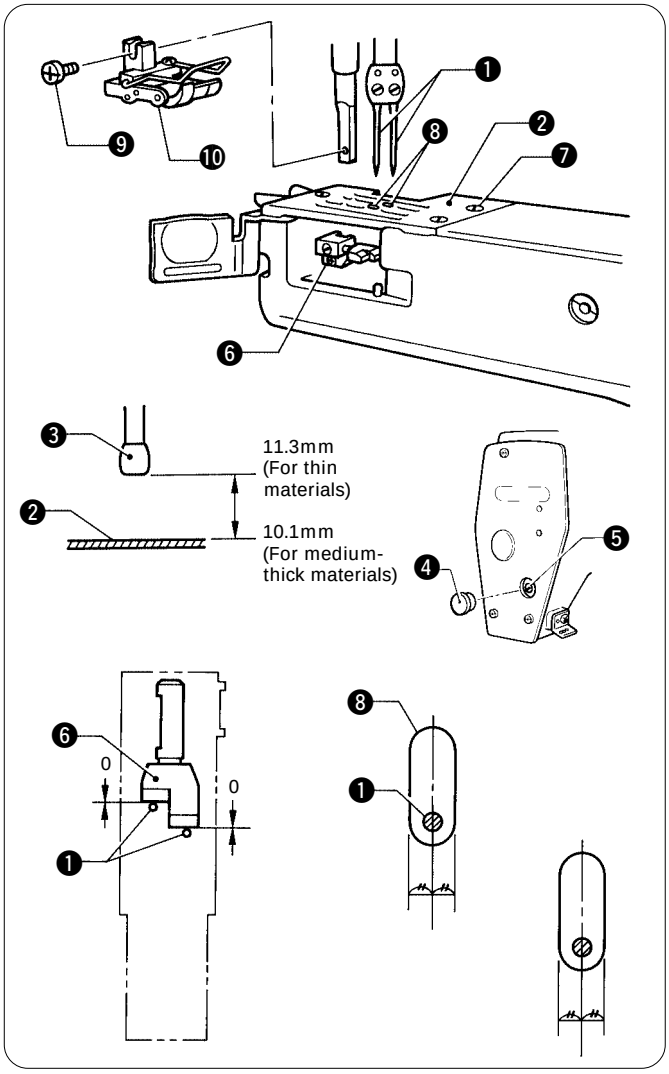

Adjust the heights of the needles ❶.
At this time, adjust so that each needle ❶ is in the center of the needle hole ❽ in the needle plate ❷.

1. Remove the screw ❾, and then remove the presser foot ❿.
2. Turn the machine pulley to drop the needle bar to its lowest position.
3. Remove the rubber plug ❹, loosen the needle bar clamp screw ❺ and adjust so that the distance between the bottom of the needle clamp ❸ and the top of the needle plate ❷ is 11.3 mm (for thin materials) or 10.1 mm (for medium-thick materials).
   * If the needle clamp is set in the way described above, the distance between the points of the needles ❶ and the top of the needle plate ❷ will be 8.5 mm (for thin materials) or 10.3 mm (for medium-thick materials) when the needle clamp ❸ is raised to its highest position.
4. Remove the three screws ❼, and then remove the needle plate ❷.
5. Turn the machine pulley so that the needles ❶ and the needle guard ❻ are aligned, and then adjust the tilt of the needle clamp ❸ so that there is no space between the left and right needles ❶ and the needle guard ❻ at this time.
   Install the needle plate ❷ with the three screws ❼, and after checking that the needles ❶ are in the centers of the needle holes ❽, tighten the needle bar clamp screw ❺.
6. Insert the rubber plug ❹.
7. Install the presser foot ❿ with the screw ❾.

9-2. Needle and looper timing adjustment

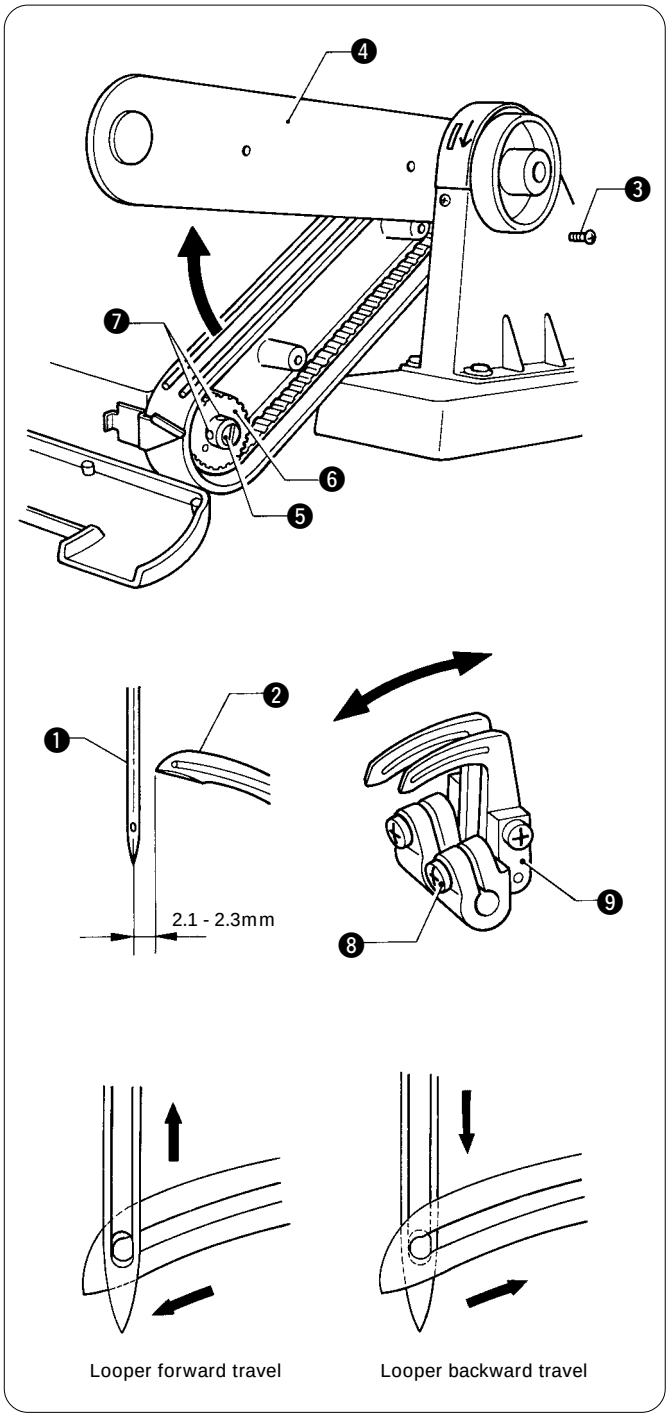

Make an adjustment so that, when needles ❶ are down lowest loopers ❷ reach the end of their backward travel and the distance from the needle center to the looper tip is 2.1 to 2.3 mm.

1. Remove the presser foot, needle plate and feed dogs (Refer to page 15)
2. Remove the two screws ❸, and then open the belt cover plate ❹.
3. Turn the pulley toward yourself until loopers ❷ reach the end of their backward travel.
4. Loosen cap screw ❺, and then loosen two set screws ❼ on lower belt wheel ❻.
5. Turn the pulley toward yourself until needles ❶ come down to the lowest position.
6. Tighten two set screws ❼ securely, and then tighten cap screw ❺.
7. Loosen set screw ❽, move looper holder ❾ in the arrow direction until the distance between the needle center and the looper tip is 2.1 to 2.3 mm, and retighten set screw ❽ securely.
8. Make sure that the looper thread eyes match the needle eyes in the forward and backward travels of the loopers.
9. Close the belt cover plate ❹, and then tighten the two screws ❸.
10. Install the presser foot, needle plate and feed dogs.

9-3. Timing of loopers running clear of needles

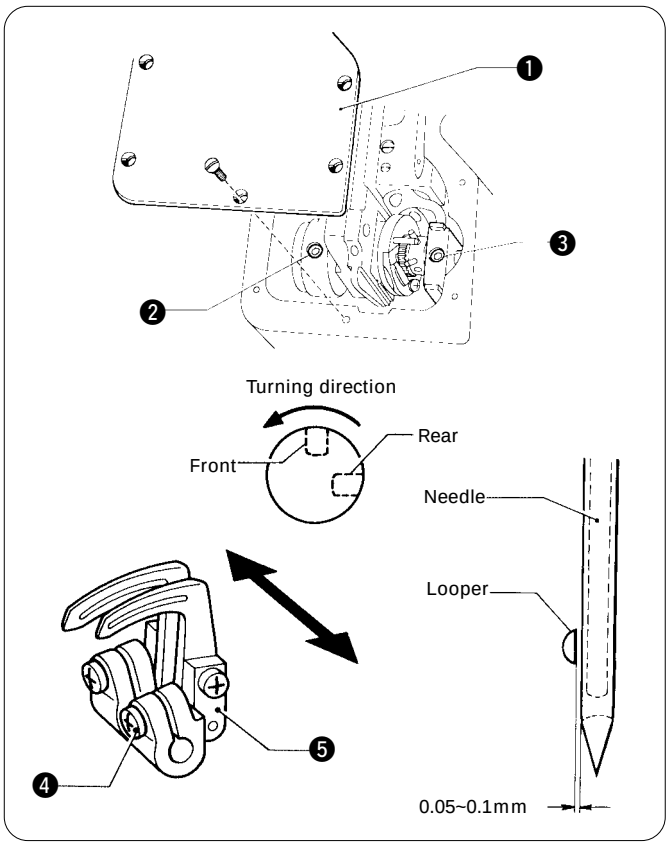

The loopers run in back of the needles in their forward travel and in front of the needles in their backward travel. Adjust the clearance between the needles and the loopers to anywhere from 0.05 to 0.1 mm in the forward travel.

1. Remove forward feed arm cover ❶.
2. The forward/back looper timing should be adjusted so that the set screw which is at the front relative to the forward/back cam turning direction is aligned with the screw adjustment hole ❸ when the set screw which is at the front relative to the up/down cam turning direction is aligned with the looper connecting rod adjustment hole ❷.
   To adjust, loosen the set screw which is at the rear relative to the forward/back cam turning direction, and then loosen the set screw at the front just enough so that the forward/back cam can be adjusted.
   After adjusting, tighten the two set screws.
3. Loosen the looper holder screw ❹, and then move the looper holder ❺ in the direction of the arrow to adjust so that the clearance between the tip of the looper and the center of the needle is 0.05 - 0.1 mm when the two are aligned.
   At this time, do not move the looper holder ❺ in any direction except the direction indicated by the arrow. If it is moved in another direction, carry out the adjustments given in “9 - 2. Adjusting the needle and looper timing” on page 16.
4. Install the forward feed arm cover ❶.

9-4. Needle guard adjustment

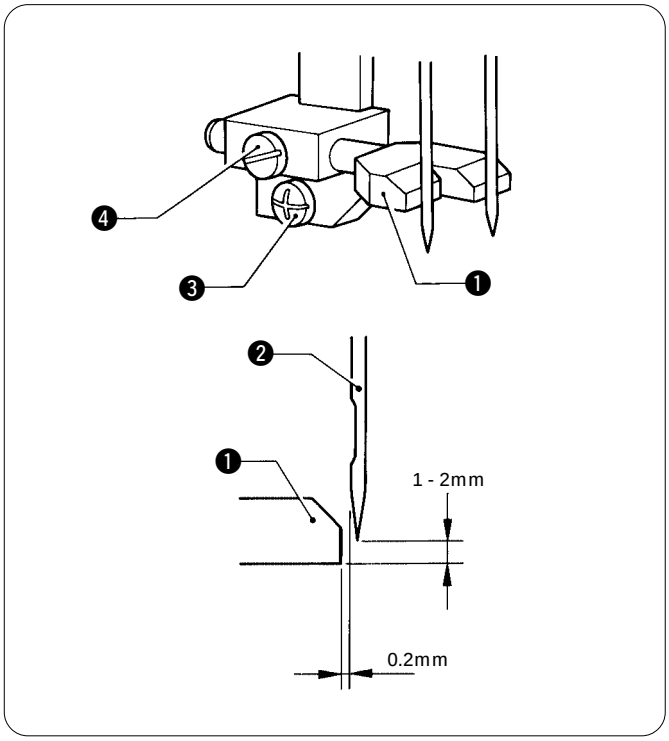

[For movable needle guard]
The clearance between the needle guard ❶ and the needles ❷ should be 0.2 mm when the stitch length is at the minimum setting and the loopers are moving toward the needles.
The heights should be adjusted to as low a setting as possible without the loopers breaking.

1. Adjust the stitch length to the minimum setting. (Refer to page 12.)
2. Turn the machine pulley toward yourself to align the loopers with the centers of the needles.
3. Loosen the set screw ❸, and then raise or lower the needle guard ❶ so that the distance from the bottom of the needle guard ❶ to the points of the needles is 1 - 2 mm.
4. Tighten the set screw ❸.
5. Loosen the set screw ❹, and then move the needle guard ❶ to the left or right to adjust so that the clearance between the needle guard ❶ and the needles is 0.2 mm.
6. Tighten the set screw ❹.

NOTE:
For some materials and threads, the best results can be obtained if the needle guard and the needle are touching slightly when the stitch length is adjusted to the actual stitch length.

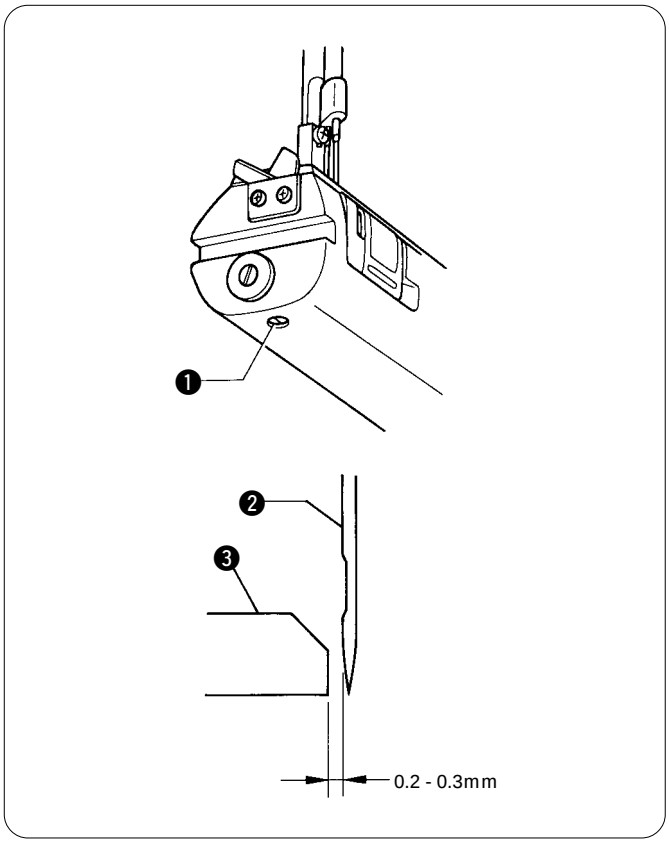

[For fixed needle guard]
The needle guard prevents the needles from contacting the loopers in their forward travel. Position the needle guard as close to the needles as possible but make sure that it is clear of the needles.

1. Turn the pulley toward yourself until the needles come down to the lowest position.
2. Loosen lower set screw ❶ at the end of the forward feed arm.
3. Adjust the clearance between needles ❷ and needle guard ❸ to anywhere from 0.2 to 0.3 mm by moving needle guard ❸.
4. After the adjustment, retighten set screw ❶ securely.

9-5. Feed dog height adjustment

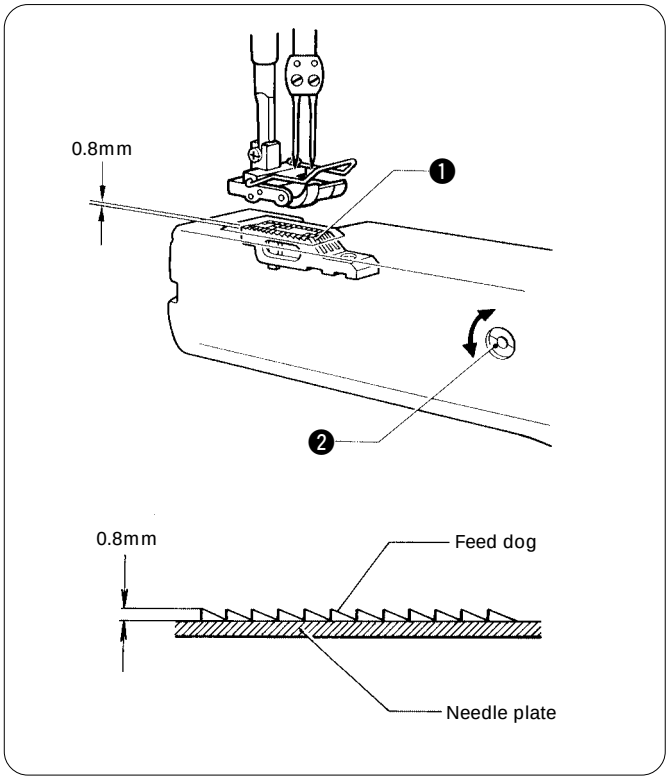

Adjust the height of feed dog ❶ so it is 0.8 mm above the top of the needle plate when feed dog ❶ is at the highest position.

Adjust the height of feed dog ❶ by turning feed bar eccentric shaft ❷.

9-6. Upper thread take-up thread guide adjustment

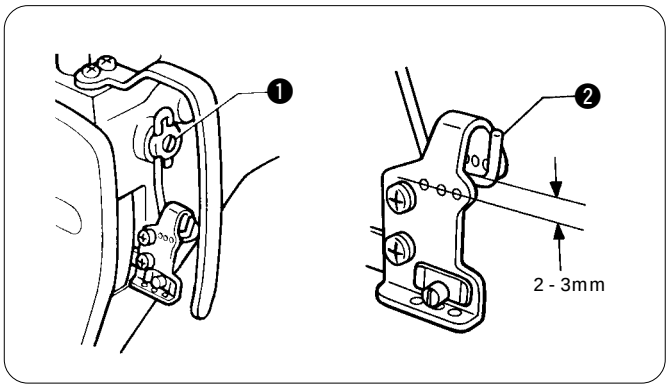

Adjust the distance between the center of the upper thread take-up and the top of the thread guide will be 2 ~ 3 mm.

1. Turn the pulley toward yourself until the needle bar is down at the lowest position.
2. Loosen the screw ❶, and then move the upper thread take-up thread guide ❷ up or down to adjust so that the distance from the top of the upper thread take-up thread guide ❷ to the center of the upper thread take-up hole is 2 - 3 mm.
   * The higher the upper thread take-up thread guide ❷, the greater will be the upper thread loops.
3. Tighten the screw ❶.

9-7. Upper thread arm thread guide adjustment

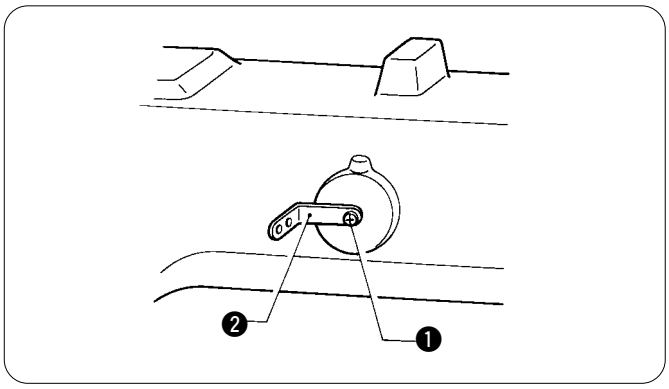

Adjust the upper thread arm thread guide so that the upper thread has a slight tension when the loopers run out of upper thread loops.

1. Loosen the screw ❶, and then adjust so that the upper thread arm thread guide ❷ is nearly horizontal.
2. After the adjustment, retighten the screw ❶.

9-8. Thread release shaft adjustment

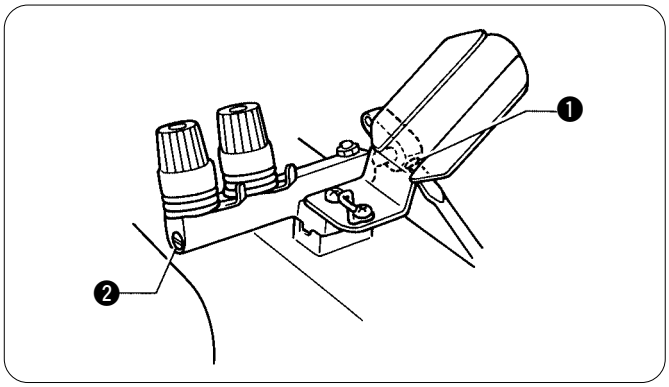

Adjust the thread release shaft so that the thread tension discs loosen when the presser foot is raised and tighten when the presser foot is lowered.

1. Loosen set screw ❶.
2. Make an adjustment by turning thread release shaft ❷ so that the thread tension discs begin to loosen when the presser foot rises 4 mm above the top of the needle plate.
3. After the adjustment, retighten set screw ❶ securely.

9-9. Lower thread take-up timing adjustment

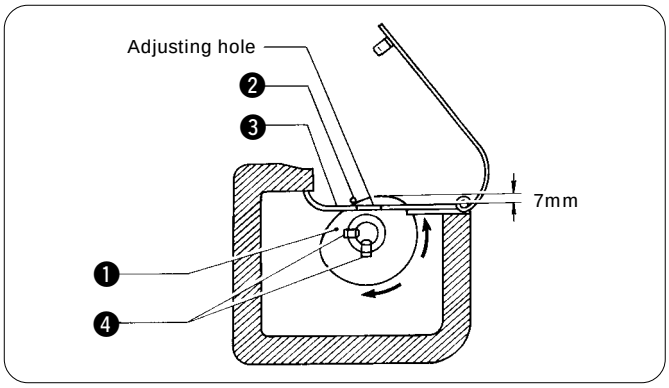

Make an adjustment so that, when the loopers begin moving backward, lower thread take-up ❶ contacts thread ❷, and is 7 mm up from lower thread take-up base ❸.

1. Insert screwdriver through the adjusting hole in the lower thread take-up base, and loosen two set screws ❹.
2. Raise lower thread take-up ❶ until it is 7 mm up from thread take-up base ❸.
3. After the adjustment, retighten two set screws ❹ securely.

9-10. Installing the lapper

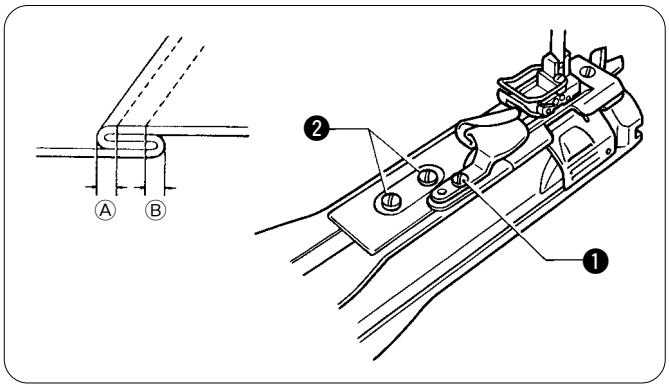

Insert the lapper guide plate from the front into the oval slot in the forward feed arm cover, making sure that the end of lapper is clear of the presser foot.

■ **Lapper adjustment**
Adjust felling distance of point Ⓐ by loosing set screw ❶.
After the adjustment, retighten set screw ❶.
Adjust felling distance of point Ⓑ by loosing set screws ❷.
After the adjustment, retighten set screws ❷.

9-11. Puller height adjustment (Machines with puller)

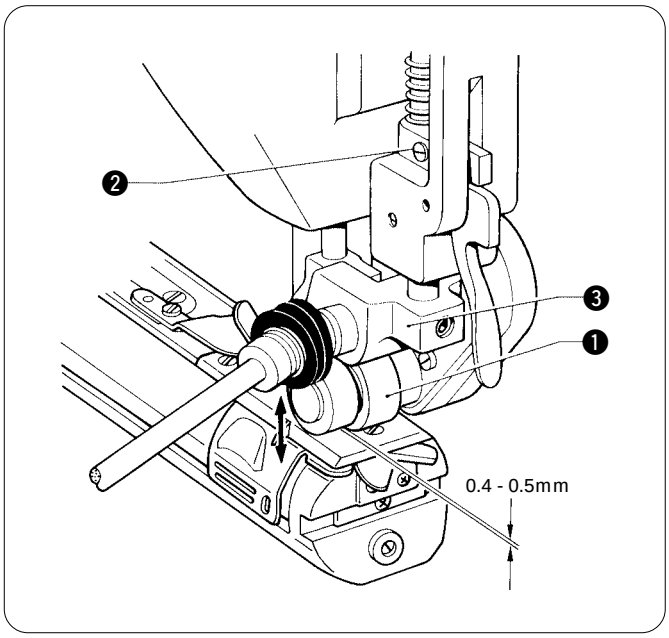

Adjust the height of puller ❶ so that it is 0.4 to 0.5 mm high from the top of the needle plate.

Loosen set screw ❷, and move puller support ❸ up or down until puller ❶ is 0.4 to 0.5 mm above the top of the needle plate.
After the adjustment, retighten set screw ❷.

9-12. Puller timing adjustment (Machines with puller)

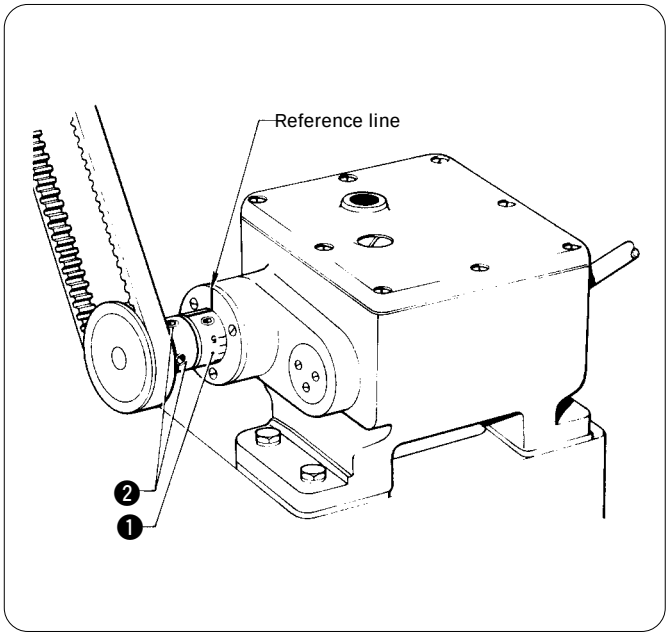

Make an adjust so that, when the needle bar is down at the lowest position, the mark on timing collar ❶ is in line with the reference line.

1. Turn the pulley toward yourself until the mark on timing collar ❶ meets the reference line.
2. Loosen two set screws ❷, and turn the pulley toward yourself until the needle bar is lowered all the way down.
3. Retighten set screws ❷.

10. TROUBLESHOOTING

- Please check the following points before calling for repairs or service.
- If the following suggestions do not solve the problem, turn off the machine power supply and contact your nearest Brother service center.

⚠ CAUTION

- Turn off the power supply before adjusting the stitch length, otherwise the machine will operate if the treadle is pressed by mistake, which could result in injury.
  However, the motor will keep turning even after the power is switched off as a result of the motor's inertia. Wait until the motor stops fully before starting work.

Problem	Possible cause	Page
1. Upper thread is not tight.	● Is the upper thread tension too weak, or is the lower thread tension too strong? Adjust the upper thread tension or lower thread tension. ● Is the position of the upper thread take-up thread guide incorrect? Adjust the upper thread take-up thread guide position correctly.	11 19
2. Skipped stitches occur while sewing 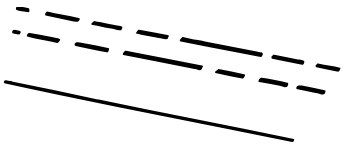	● Is the needle properly installed? If it is incorrect, install the needle correctly. ● Are the looper points dull? Replace loopers with good ones. ● Is the needle and looper timing incorrect? Adjust the needle and looper timing correctly. ● Is the clearance between needles and loopers incorrect? Adjust the clearance between needles and loopers correctly. ● Is the lower thread take-up timing incorrect? Adjust the lower thread take-up timing correctly.	8 16 16 17 19
3. Seam position is incorrect. (Machines with puller)	● Is the puller timing incorrect? Adjust the puller timing. ● Is the puller feed incorrect? Adjust the puller feed. ● Is the presser foot pressure incorrect? Adjust the presser foot pressure. ● Is the feed dog height incorrect? Adjust the feed dog height.	20 12 11 18
4. Machine does not feed work.	● Is the feed dog too low? Adjust the feed dog height. ● Is the presser foot pressure too small? Adjust the presser foot pressure. ● Is the feed dog worn out? Have serviceman check it. - ● Presser foot floats and does not fully press work. Have serviceman check it. - ● Feed dog and presser foot work on one side only.	18 11 – – –
5. Upper and lower threads are breaking. 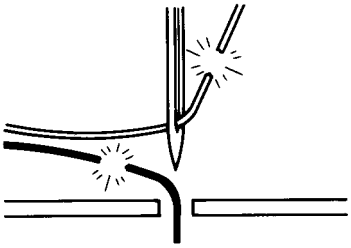	● Is the needle bent or is the needle tip broken? Replace the needle if it is bent or broken. ● Is the needle properly installed? If it is incorrect, install the needle correctly. ● Is the needle properly threaded? If it is incorrect thread the needle correctly. ● Is the upper or lower thread tension too weak or too strong? Adjust the upper thread or lower thread tension. ● Is the thread release shaft position incorrect? Adjust the thread release shaft position correctly. ● Are the needle eyes too small for threads? Refer to the section on "Needles and threads". ● Are the loopers damaged? Replace loopers with good ones.	8 8 9 11 19 8 16

Problem	Possible cause	Page
6. Broken needles 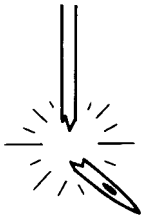	● Is the material being pushed or pulled with excessive force during sewing?	–
	● Is the needle properly installed? If it is incorrect, install the needle correctly.	8
	● Is the needle bent, is the needle tip broken, or is the needle hole blocked? If the loopers are damaged, smooth it with an oiled grindstone or replace it.	8
	● Does the needles hit the loopers? Adjust timing of loopers running clear of needles.	17
	● Does the needles hit the needle guard? (For fixed needle guard) Adjust the needle guard.	18
	● Are the needle eyes too small for threads? Refer to the section on "Needles and threads".	8
	Caution ● It is extremely dangerous to leave any pieces of broken needle sticking in the material. If the needle breaks, search for all pieces until the whole of the needle is found again. ● Furthermore, we recommend that through steps be taken to account for such needles to comply with product liability regulations.	

brother®

INSTRUCTION MANUAL

BROTHER INDUSTRIES, LTD.
15-1, Naeshiro-cho, Mizuho-ku, Nagoya 467-8561, Japan. Phone: 81-52-824-2177

Printed in Japan

118-927
S92927-102
2002.03. B (1)