KE-484C

INSTRUCTION MANUAL

Please read this manual before using the machine.
Please keep this manual within easy reach for quick reference.

ELECTRONIC LOCKSTITCH PATTERN TACKER WITH TREBLE HOOK

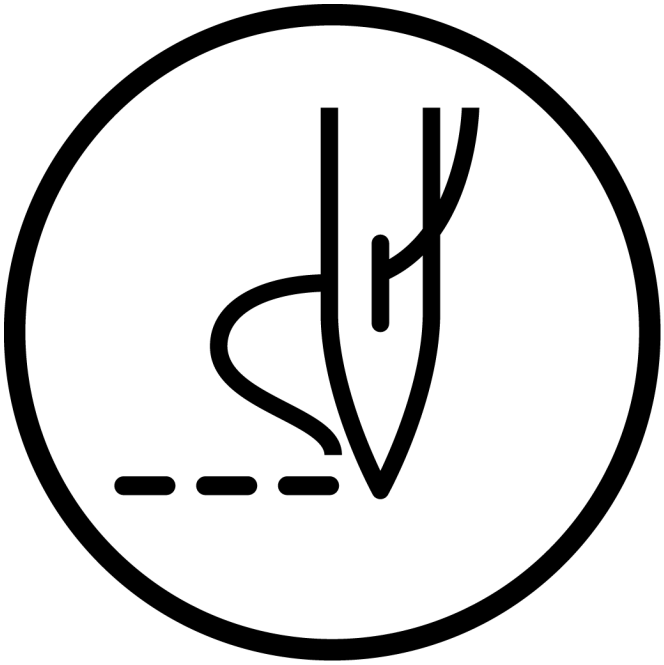

brother®

Thank you very much for buying a BROTHER sewing machine. Before using your new machine, please read the safety instructions below and the explanations given in the instruction manual.

With industrial sewing machines, it is normal to carry out work while positioned directly in front of moving parts such as the needle and thread take-up lever, and consequently there is always a danger of injury that can be caused by these parts. Follow the instructions from training personnel and instructors regarding safe and correct operation before operating the machine so that you will know how to use it correctly.

SAFETY INSTRUCTIONS

1. Safety indications and their meanings

This instruction manual and the indications and symbols that are used on the machine itself are provided in order to ensure safe operation of this machine and to prevent accidents and injury to yourself or other people.
The meanings of these indications and symbols are given below.

Indications

⚠ **DANGER**	The instructions which follow this term indicate situations where failure to follow the instructions will almost certainly result in death or severe injury.
⚠ **CAUTION**	The instructions which follow this term indicate situations where failure to follow the instructions could cause injury when using the machine or physical damage to equipment and surroundings.

Symbols

····· This symbol (△) indicates something that you should be careful of. The picture inside the triangle indicates the nature of the caution that must be taken.
(For example, the symbol at left means “beware of injury”.)

····· This symbol (⃠) indicates something that you <u>must not</u> do.

····· This symbol (●) indicates something that you <u>must</u> do. The picture inside the circle indicates the nature of the thing that must be done.
(For example, the symbol at left means “you must make the ground connection”.)

2. Notes on safety

DANGER

Wait at least 5 minutes after turning off the power switch and disconnecting the power cord from the wall outlet before opening the face plate of the control box. Touching areas where high voltages are present can result in severe injury.

CAUTION

Environmental requirements

Use the sewing machine in an area which is free from sources of strong electrical noise such as high-frequency welders.
Sources of strong electrical noise may cause problems with correct operation.

Any fluctuations in the power supply voltage should be within ±10% of the rated voltage for the machine.
Voltage fluctuations which are greater than this may cause problems with correct operation.

The power supply capacity should be greater than the requirements for the sewing machine's electrical consumption.
Insufficient power supply capacity may cause problems with correct operation.

The pneumatic delivery capability should be greater than the requirements for the sewing machine's total air consumption.
Insufficient pneumatic delivery capability may cause problems with correct operation.

The ambient temperature should be within the range of 5°C to 35°C during use.
Temperatures which are lower or higher than this may cause problems with correct operation.

The relative humidity should be within the range of 45% to 85% during use, and no dew formation should occur in any devices.
Excessively dry or humid environments and dew formation may cause problems with correct operation.

Avoid exposure to direct sunlight during use.
Exposure to direct sunlight may cause problems with correct operation.

In the event of an electrical storm, turn off the power and disconnect the power cord from the wall outlet.
Lightning may cause problems with correct operation.

Installation

Machine installation should only be carried out by a qualified technician.

Contact your Brother dealer or a qualified electrician for any electrical work that may need to be done.

The sewing machine weighs more than 56 kg. The installation should be carried out by two or more people.

Do not connect the power cord until installation is complete, otherwise the machine may operate if the foot switch is depressed by mistake, which could result in injury.

Hold the machine head with both hands when tilting it back or returning it to its original position.
Furthermore, after tilting back the machine head, do not push the face plate side or the pulley side from above, as this could cause the machine head to topple over, which may result in personal injury or damage to the machine.

Be sure to connect the ground. If the ground connection is not secure, you run a high risk of receiving a serious electric shock, and problems with correct operation may also occur.

All cords should be secured at least 25 mm away from any moving parts. Furthermore, do not excessively bend the cords or secure them too firmly with staples, otherwise there is the danger that fire or electric shocks could occur.

Install the belt covers to the machine head and motor.

If using a work table which has casters, the casters should be secured in such a way so that they cannot move.

Be sure to wear protective goggles and gloves when handling the lubricating oil and grease, so that they do not get into your eyes or onto your skin, otherwise inflammation can result.
Furthermore, do not drink the oil or eat the grease under any circumstances, as they can cause vomiting and diarrhoea.
Keep the oil out of the reach of children.

CAUTION

Sewing

This sewing machine should only be used by operators who have received the necessary training in safe use beforehand.

The sewing machine should not be used for any applications other than sewing.

Be sure to wear protective goggles when using the machine.
If goggles are not worn, there is the danger that if a needle breaks, parts of the broken needle may enter your eyes and injury may result.

Set the needle to the needle up stop position before turning off the power.
If this is not done, the wiper may strike the needle, which might cause the needle to break.

Turn off the power switch at the following times, otherwise the machine may operate if the foot switch is depressed by mistake, which could result in injury.

- When threading the needle
- When replacing the needle and bobbin
- When not using the machine and when leaving the machine unattended

If using a work table which has casters, the casters should be secured in such a way so that they cannot move.

Attach all safety devices before using the sewing machine. If the machine is used without these devices attached, injury may result.

Do not touch any of the moving parts or press any objects against the machine while sewing, as this may result in personal injury or damage to the machine.

If an error occurs in machine operation, or if abnormal noises or smells are noticed, immediately turn off the power switch. Then contact your nearest Brother dealer or a qualified technician.

If the machine develops a problem, contact your nearest Brother dealer or a qualified technician.

Cleaning

Set the needle to the needle up stop position before turning off the power.
If this is not done, the wiper may strike the needle, which might cause the needle to break.

Turn off the power switch before carrying out cleaning, otherwise the machine may operate if the foot switch is depressed by mistake, which could result in injury.

Be sure to wear protective goggles and gloves when handling the lubricating oil and grease, so that they do not get into your eyes or onto your skin, otherwise inflammation can result.
Furthermore, do not drink the oil or eat the grease under any circumstances, as they can cause vomiting and diarrhoea.
Keep the oil out of the reach of children.

Maintenance and inspection

Maintenance and inspection of the sewing machine should only be carried out by a qualified technician.

Ask your Brother dealer or a qualified electrician to carry out any maintenance and inspection of the electrical system.

Set the needle to the needle up stop position before turning off the power.
If this is not done, the wiper may strike the needle, which might cause the needle to break.

Turn off the power switch and disconnect the power cord from the wall outlet at the following times, otherwise the machine may operate if the foot switch is depressed by mistake, which could result in injury.

- When carrying out inspection, adjustment and maintenance
- When replacing consumable parts such as the rotary hook

Disconnect the air hoses from the air supply and wait for the needle on the pressure gauge to drop to “0” before carrying out inspection, adjustment and repair of any parts which use the pneumatic equipment.

If the power switch and air need to be left on when carrying out some adjustment, be extremely careful to observe all safety precautions.

Hold the machine head with both hands when tilting it back or returning it to its original position.
Furthermore, after tilting back the machine head, do not push the face plate side or the pulley side from above, as this could cause the machine head to topple over, which may result in personal injury or damage to the machine.

Use only the proper replacement parts as specified by Brother.

If any safety devices have been removed, be absolutely sure to re-install them to their original positions and check that they operate correctly before using the machine.

Any problems in machine operation which result from unauthorized modifications to the machine will not be covered by the warranty.

3. Warning labels

The following warning labels appear on the sewing machine.
Please follow the instructions on the labels at all times when using the machine. If the labels have been removed or are difficult to read, please contact your nearest Brother dealer.

1

⚠DANGER	⚠GEFAHR	⚠DANGER	⚠PELIGRO
Hazardous voltage will cause injury. Turn off main switch and wait 5 minutes before opening this cover.	Hochspannung verletzungsgefahr! Bitte schalten sie den hauptschalter aus und warten sie 5 minuten, bevor sie diese abdeckung ffnen.	Un voltage non adapt provoque des blessures. Eteindrel'interrupteur et attendre 5 minutes avantd' ouvrir le capot	Un voltaje inadecuado puede provocar las heridas. Apagar el interruptor principal y esperar 5 minutos antes de abrir esta cubierta.

2

⚠ CAUTION
Moving parts may cause injury. Operate with safety devices. Turn off main switch before threading, changing bobbin and needle, cleaning etc.

Safety devices
- Eye guard
- Finger guard
- Thread take-up cover
- Belt cover
- Frame side cover, etc.

3 High temperature warning display

4 Be sure to connect the ground. If the ground connection is not secure, you run a high risk of receiving a serious electric shock, and problems with correct operation may also occur.

5 Direction of operation

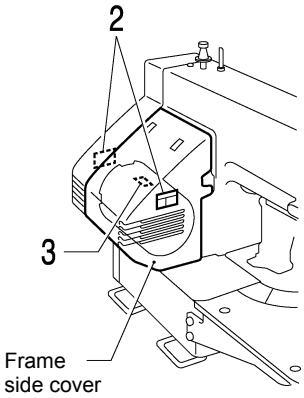

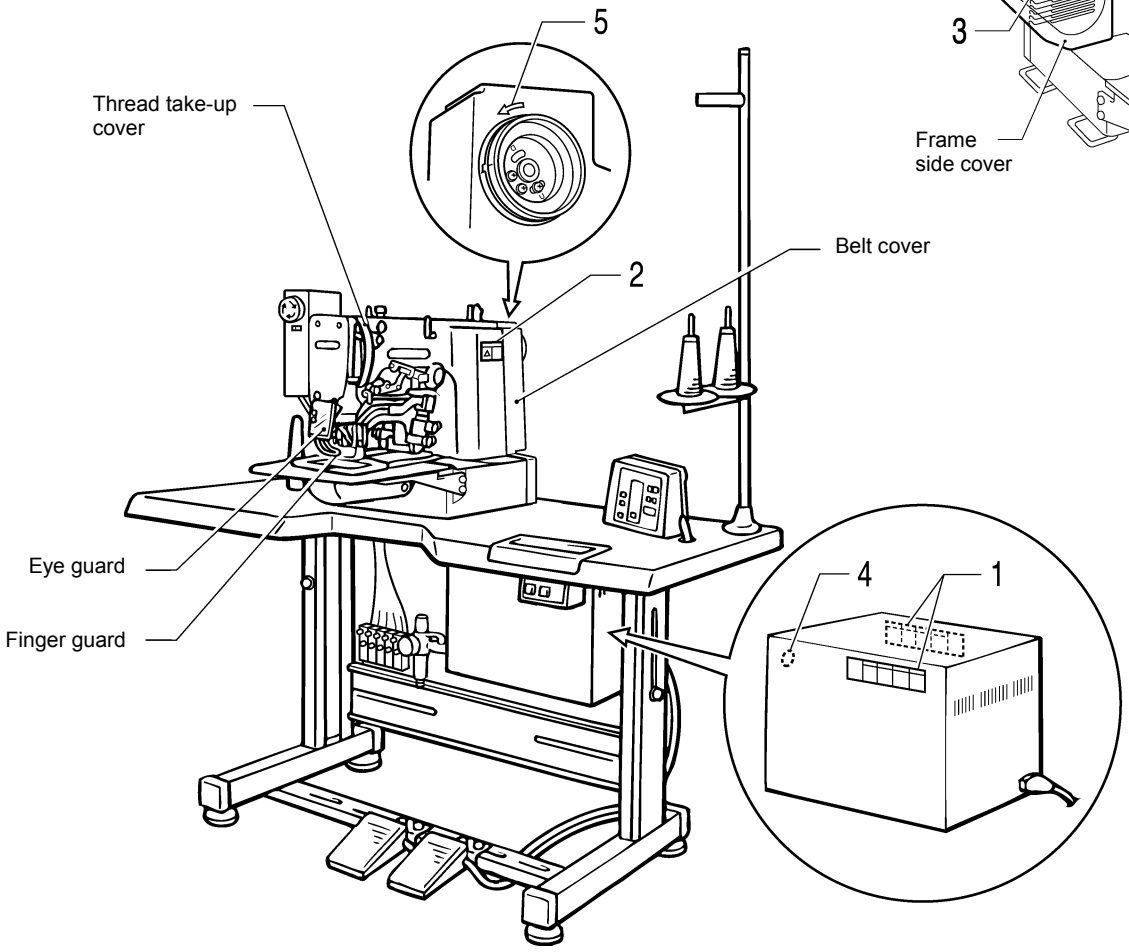

3220Q

CONTENTS

1. NAME OF EACH PART 1

2. SPECIFICATIONS 2
- 2-1. Specifications 2

3. INSTALLATION 3
- 3-1. Power table 3
- 3-2. Installing the control box 4
- 3-3. Installing the rubber cushions 5
- 3-4. Installing the oil pan 5
- 3-5. Installing the cushions 5
- 3-6. Installing the switching plate 6
- 3-7. Installing the machine head 6
- 3-8. Installing the head rest 7
- 3-9. Installing the operation panel 7
- 3-10. Connecting the ground wire 8
- 3-11. Connecting the cords 9
- 3-12. Piping 12
- 3-13. Installing the belt cover 15
- 3-14. Installing the foot switch 15
- 3-15. Installing the needle sub plate 16
- 3-16. Installing the spool stand 17
- 3-17. Installing the eye guard 17

4. LUBRICATION 18
- 4-1. Lubrication points 18

5. OPERATION 19
- 5-1. Name and function of each operation panel item 19
- 5-2. Operating procedure 21
- 5-3. Operating the foot switch 22
- 5-4. Operating the emergency stop switch 23
- 5-5. Operating the thread wiper switch 23

6. CHECKING THE SEWING PATTERN 24

7. CORRECT USE 25
- 7-1. Installing the needle 25
- 7-2. Threading the upper thread 25
- 7-3. Winding the lower thread 26
- 7-4. Replacing the bobbin case and threading the thread 27
- 7-5. Thread tension 27

8. SEWING 30

9. MAINTENANCE AND INSPECTION 31
- 9-1. Checking the needle 31
- 9-2. Cleaning the rotary hook 31
- 9-3. Lubrication 32
- 9-4. Draining the oil 33
- 9-5. Cleaning the control box air inlet port 33
- 9-6. Cleaning the air holes of belt cover and frame side cover 33
- 9-7. Cleaning the eye guard 33

10. STANDARD ADJUSTMENTS 34
- 10-1. Adjusting the needle bar height 34
- 10-2. Adjusting the needle bar lift amount 34
- 10-3. Adjusting the needle clearance 35
- 10-4. Adjusting the thread take-up amount 35
- 10-5. Adjusting the movable knife 36
- 10-6. Adjusting the work clamp lift amount 38
- 10-7. Work clamp interchangeability 39
- 10-8. Adjusting the needle up stop position 39
- 10-9. Adjusting the thread wiper 40
- 10-10. Adjustment of air pressure 40
- 10-11. Checking the input sensor and DIP switch input 41
- 10-12. Checking the input voltage 42
- 10-13. Clearing all memory settings 42
- 10-14. Moving stitch patterns 43

11. USING THE COUNTERS 44
- 11-1. Using the bobbin thread counter 44
- 11-2. Using the production counter 44

12. CHANGING FUNCTIONS USING THE DIP SWITCHES 45
- 12-1. Operation panel DIP switches 45
- 12-2. DIP switches inside the control box 46
- 12-3. Using user programs 47

13. CHANGING SPECIAL FUNCTIONS USING THE MEMORY SWITCHES 49
- 13-1. Using the cycle sewing function 52

14. SETTING THE WORK CLAMP MODE 54
- 14-1. Light work clamp 55

15. TABLE OF ERROR CODES 56

16. TROUBLESHOOTING 58

17. OPTIONAL PARTS 61

1. NAME OF EACH PART

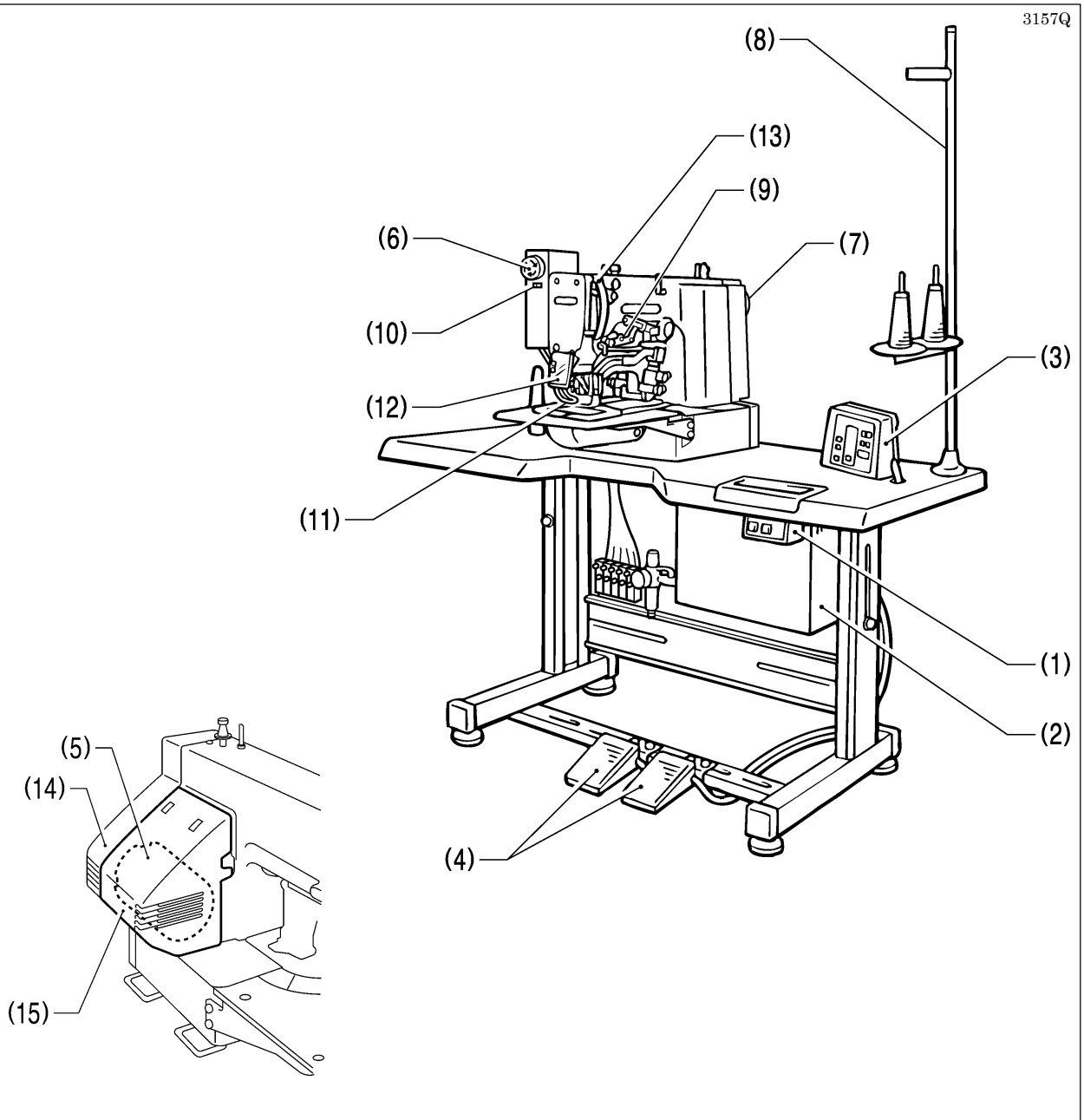

(1) Power switch
(2) Control box
(3) Operation panel
(4) Foot switch
(5) Motor
(6) EMERGENCY STOP switch
(7) Pulley
(8) Spool stand
(9) Thread take-up lever
(10) Thread wiper switch

Safety devices;
(11) Finger guard
(12) Eye guard
(13) Thread take-up cover
(14) Belt cover
(15) Frame side cover

2. SPECIFICATIONS

2-1. Specifications

BROTHER INDUSTRIES, LTD.

• KE-484C •

Main use	Seat Belt
Stitch formation	Single needle lock stitch
Maximum sewing speed	2,200 rpm (Pitch 3 mm)
Maximum pattern size	100 × 60 mm max.
Feed mechanism	R-θ intermittent feed mechanism (pulse-motor driven mechanism)
Stitch length	0.1 - 10.0 mm
Number of stitches	Variable
Maximum stitch number	20,000 stitches (including 10,000 stitches which can be added)
Work clamp lifter	Pneumatic type
Work clamp height	25 mm max.
Rotary hook	Treble hook
Needle	DP × 17 #25
Wiper device	Standard equipment
Thread trimmer device	Standard equipment
Thread take-up device	Standard equipment
Safety device	built-in stopping mechanism
Data storage method	P-ROM (Any sewing pattern can be added using PS-3000.)
Number of user programs	16
Number of cycle programs	4
Number of stored data	Up to 100 patterns can be added. Total number of stitches of stored data which can be added is within 10,000.
Motor	Three-phase 400W induction motor
Weights	Machine head: 56 kg, Operation panel: 0.6 kg, Control box: 9 - 19 kg (depending on destination)
Power source	Single-phase 110, 220 - 230, 240V 3-phase 220-230, 380, 400V Maximum electric power consumption; 600VA

If you want to sew a pattern, you can create your original pattern using the PS-3000.
Consult with your local Brother Sales Office for details.

Note when creating additional data
When sewing data with a small number of stitches (15 stitches or less) is sewn repeatedly (short cycle operation), the upper shaft motor may overheat and the “E-20” error code may be generated.

3. INSTALLATION

⚠ CAUTION

- Machine installation should only be carried out by a qualified technician.
- Contact your Brother dealer or a qualified electrician for any electrical work that may need to be done.
- The sewing machine head weighs more than 56 kg. The installation should be carried out by two or more people.
- Do not connect the power cord until installation is complete, otherwise the machine may operate if the foot switch is depressed by mistake, which could result in injury.
- Hold the machine head with both hands when tilting it back or returning it to its original position. Furthermore, after tilting back the machine head, do not push the face plate side or the pulley side from above, as this could cause the machine head to topple over, which may result in personal injury or damage to the machine.
- All cords should be secured at least 25 mm away from any moving parts. Furthermore, do not excessively bend the cable or secure it too firmly staples, otherwise there is the danger that fire or electric shocks could occur.
- Be sure to connect the ground. If the ground connection is not secure, you run the risk of receiving a serious electric shock, and problems with correct operation may also occur.
- Install the belt covers to the machine head and motor.

3-1. Power table

- Use the power table which has been specially designed for each sewing machines.

* If using a commercially-available table, process it as shown in the illustration below.

	Model code
Table/ legs assembly	127-V30-50001

Note:

The thickness of the table should be at least 40 mm, and it should be strong enough to bear the weight and vibration of the sewing machine.

If the distance A between the insides of the legs is less than 740 mm, move the control box installation position to the left (B = 247 mm).

Check that the control box is at least 10 mm away from the leg. If the control box and leg are touching, it could cause the sewing machine to operate incorrectly.

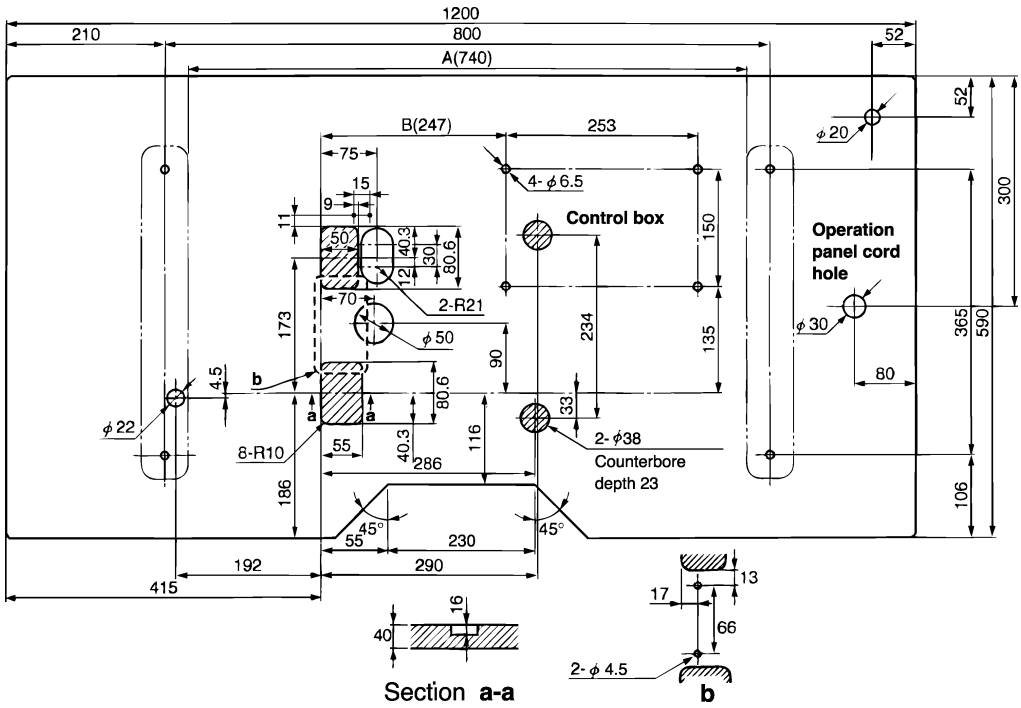

3-2. Installing the control box

Check that the IM sticker is attached to the side of the control box (in the position shown in the illustration).
(KE series machine heads can only be used with control boxes which have the IM sticker attached.)

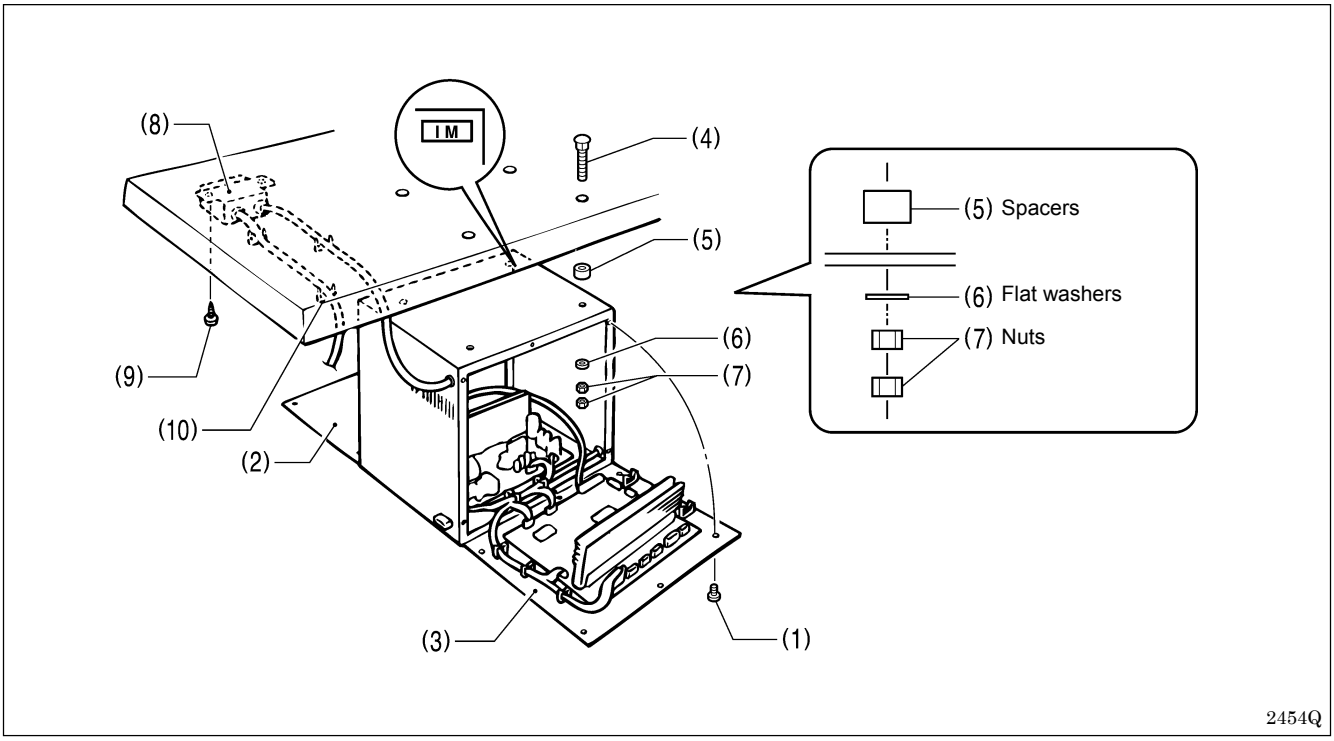

1. Remove the 12 screws (1), and then open the covers (panel mounting assembly (2) and main P.C. board mounting plate (3)).
   Note:
   When opening the cover, hold it securely so that it does not fall down.
2. Install the control box with the four accessory bolts (4), spacers (5), flat washers (6) and nuts (7) as shown in the illustration above.
   * Use two nuts (7) at each installation location, and make sure that both nuts are tightened.
3. Close the covers (panel mounting assembly (2) and main P.C. board mounting plate (3)), and tighten them with the screws (1).
   * The main P.C. board mounting plate (3) will be opened again during “3-11. Connecting the cords”, so provisionally tighten it with the screw (1).
4. Install the power switch (8) with the two screws (9).
5. Secure the power switch cord with the three staples (10).

3-3. Installing the rubber cushions

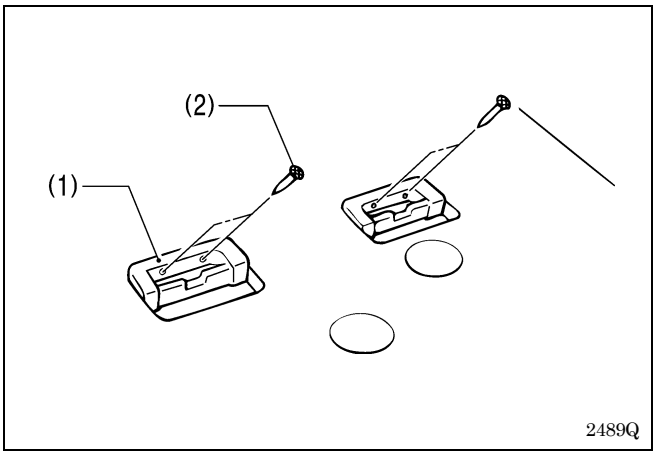

Install the rubber cushions (1) with the nails (2).

* Install so that the head of the nail does not protrude from the rubber surface

3-4. Installing the oil pan

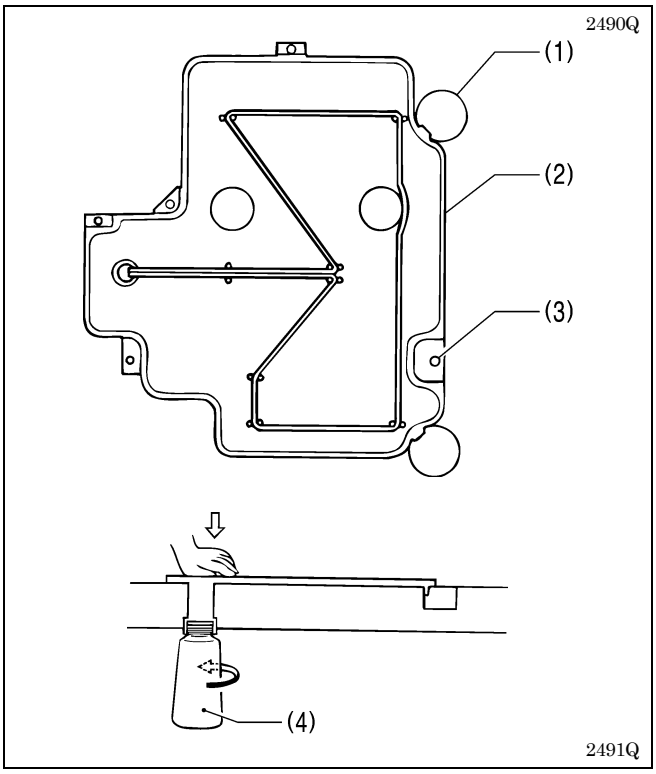

1. Insert the tabs of the oil pan (2) into the holes for the cushions (1), and then secure it in place with the five nails (3) so that the oil pan (2) is not at an angle.
2. While pushing the oil pan (2) down from above, screw in the oil container (4).

3-5. Installing the cushions

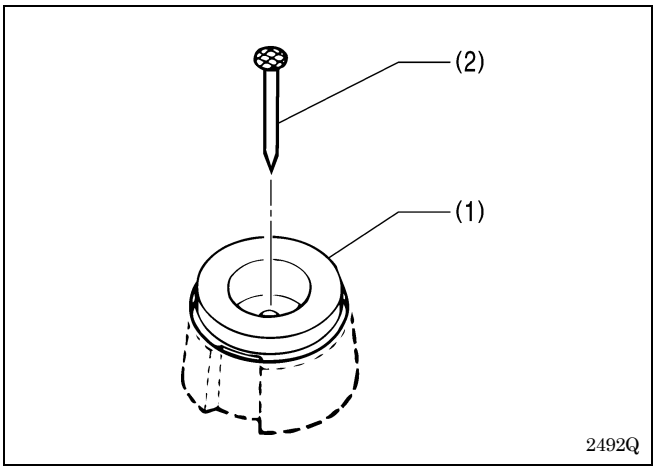

Place the two cushions (1) into the holes in the work table so that the notches are aligned with the tabs in the oil pan, and secure them in place with the nails (2).

3-6. Installing the switching plate

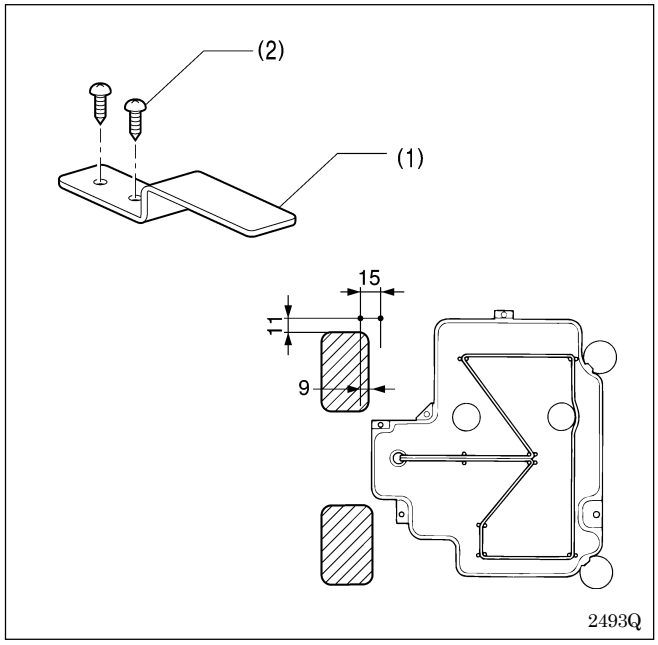

Install the switching plate (1) to the work table with the two wood screws (2) in the position shown in the illustration.

* The switching plate and the switch bracket which is attached to the machine head prevent the sewing machine from starting when the machine head is tilted back. Therefore, this means that the sewing machine will not start if the switching plate is not installed.

3-7. Installing the machine head

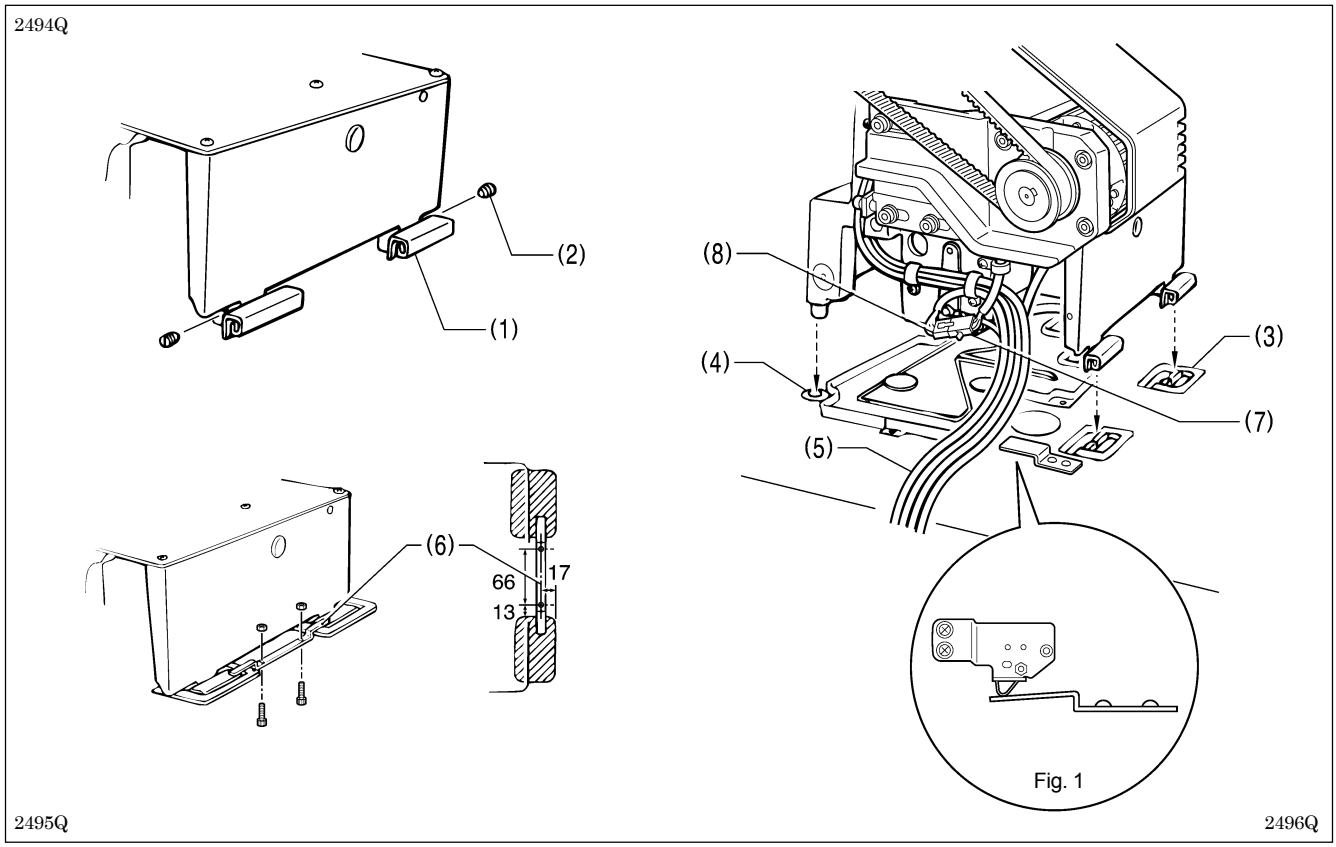

1. Insert the head hinges (1) into the machine head so that they are parallel, and then secure them with the two set screws (2).
2. Place the machine head gently on top of the rubber cushions (3) and cushions (4).
   Note:
   Pull the cords (5) out as shown in the illustration above in order to prevent them from being clamped by the machine head.
3. Install the hinge presser (6) with the two bolts and two nuts.
4. Check that the head position switch is turned on as shown in Figure 1.
5. Connect the motor cord connector (7) to the accessory cord connector (8).

3-8. Installing the head rest

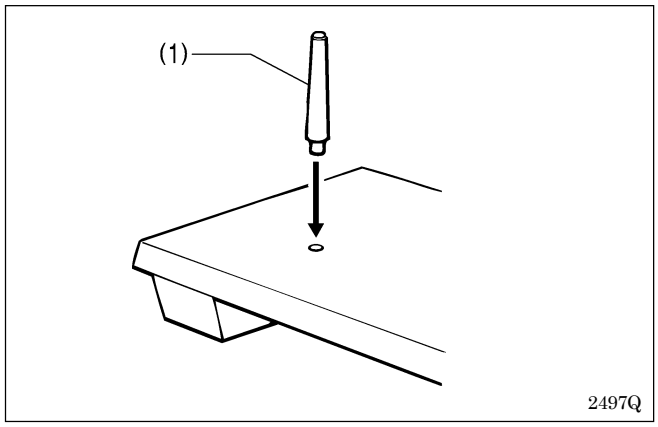

Tap the head rest (1) into the table hole.
Note:
Tap the head rest securely into the table hole.

3-9. Installing the operation panel

The operation panel can be installed to either the top or bottom of the work table.

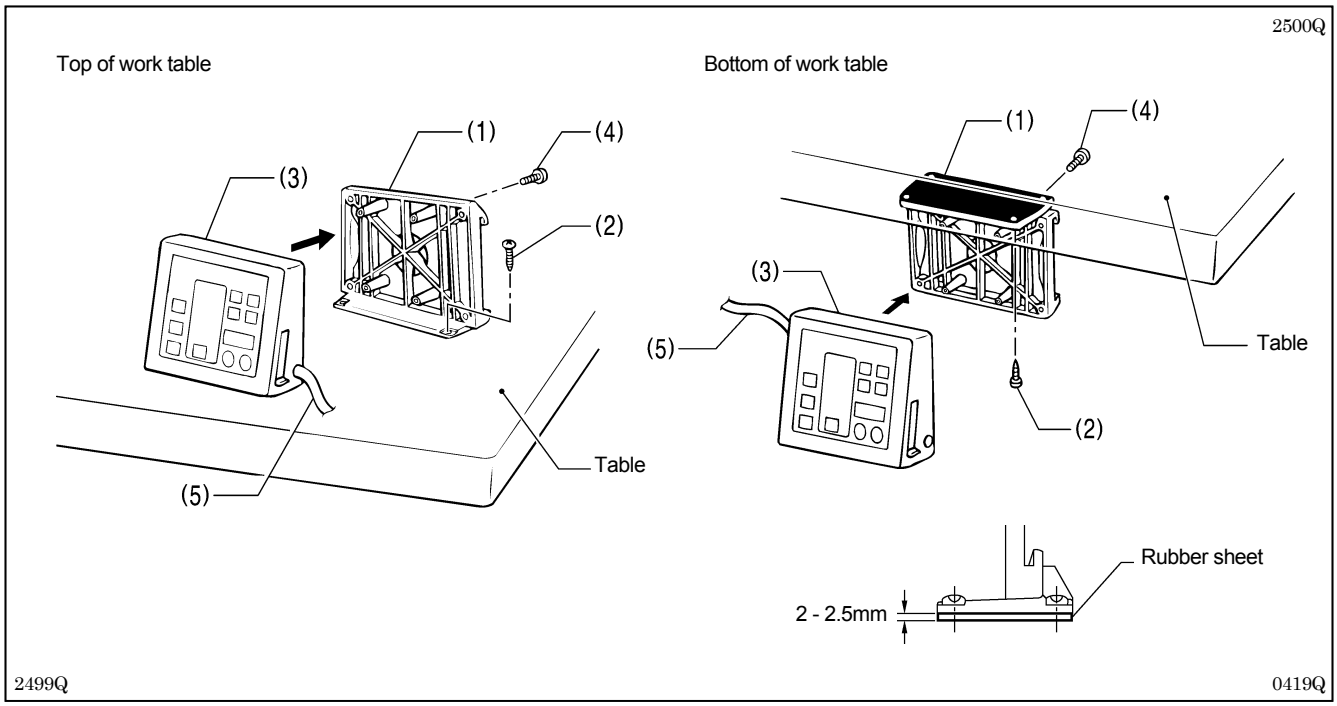

1. Install the rear frame (1) to the work table (top or bottom) with the four wood screws (2).
   * At this time, tighten the wood screws (2) until the thickness of the rubber sheet is 2 to 2.5 mm.
2. Install the front frame (3) to the rear frame (1) with the four screws (4).
   * The vertical orientation of the front frame (3) is the same whether it is installed to the top or the bottom of the work table.
3. Insert the connector cord (5) into the control box through the hole at the side of the box. Refer to “3-11 Connecting the cords” for details on connecting the cord.
4. Secure the connector cord (5) with the staples (in three places).

3-10. Connecting the ground wire

⚠ CAUTION

Be sure to connect the ground. If the ground connection is not secure, you run the risk of receiving a serious electric shock, and problems with correct operation may also occur.

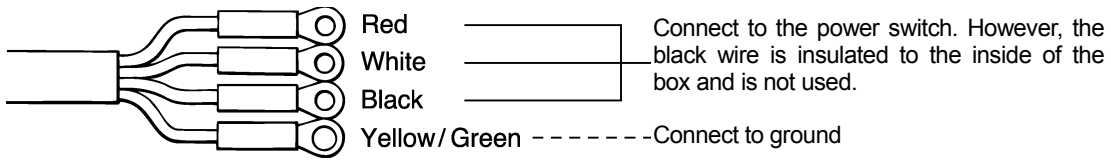

2741Q

3-11. Connecting the cords

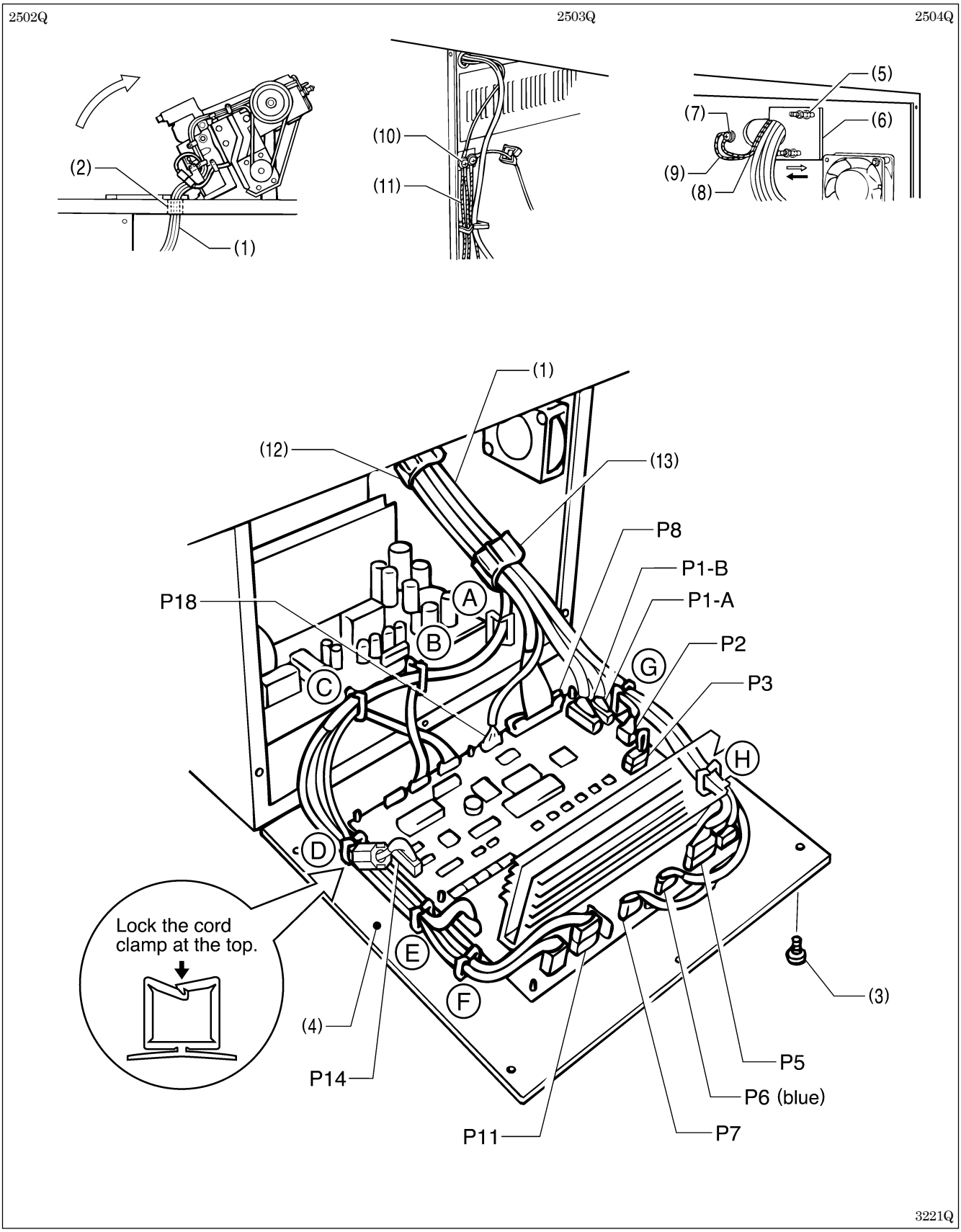

1. Gently tilt back the machine head.
   Note:
   After tilting back the machine head, do not push the face side or the pulley side from above.
2. Pass the cord bundle (1) from the machine head through the hole (2) in the work table.
3. Gently return the machine head to its original position.
4. Remove the six screws (3), and then open the control box cover (main P.C. board mounting plate (4)).
   Note:
   When opening the cover, hold it securely so that it does not fall down.
5. Loosen the two screws (5), and then open the cord presser plate (6) in the direction of the white arrow and pass the cord bundle (1) through the opening.
6. Remove the screw (7), and then pass it through the terminal holes in the ground cord (8) from the machine head and the ground cord (9) from the operation panel. Then re-tighten the screw (7) so that the ground cords (8) and (9) are secured as shown in the illustration.
7. Remove the screw (10) , and then pass it through the terminal hole in the ground cord (11) from the upper shaft motor. Then re-tighten the screw (10) so that the ground cord (11) is secured as shown in the illustration.
   Note:
   Make sure that the ground connections are secure in order to ensure safety.
8. Securely connect connectors P1 to P8, P11, P14 and P18 as indicated in the table below.
   Note:
   Check that the connector is facing the correct way, and then insert it firmly until it locks into place.
   Furthermore, lock the cord clamp at the top.

Machine head connectors			Connection location on circuit board	Cord clamps used
Connection location	No. of pins	Cord mark		
Head position switch	9-pin	[1A]	P1 - A (ORG1)	None
X, Y sensor	12-pin	[1]	P1 - B (ORG2)	None
Synchronizer	5-pin	[2]	P2 (SYNCHRO)	(G)
Machine specification select connector	8-pin	[3]	P3 (SELECT)	None
Thread trimmer solenoid	4-pin	[5]	P5 (SOL)	(G) (H)
Pulse motor, Y	4-pin (blue)	[6]	P6 (YPM)	(G) (H)
Pulse motor, X	4-pin	[7]	P7 (XPM)	(G) (H)
Operation panel	26-pin	None	P8 (PANEL)	None
Upper shaft motor	3-pin	None	P11 (UVW)	(A)(B)(C)(D)(E)(F)
EMERGENCY STOP switch	6-pin	[18]	P18 (HEAD)	None
Solenoid valve	12-pin	None	P14 (AIR)	(A)(B)(C)(D)

9. Secure the cord bundle (1) with the cord clamps (12) and (13).
10. Close the cord presser plate (6) in the direction of the black arrow, and secure it by tightening the screws (5).
    Note:
    Check that the cords do not get pulled when the machine head is tilted back gently.

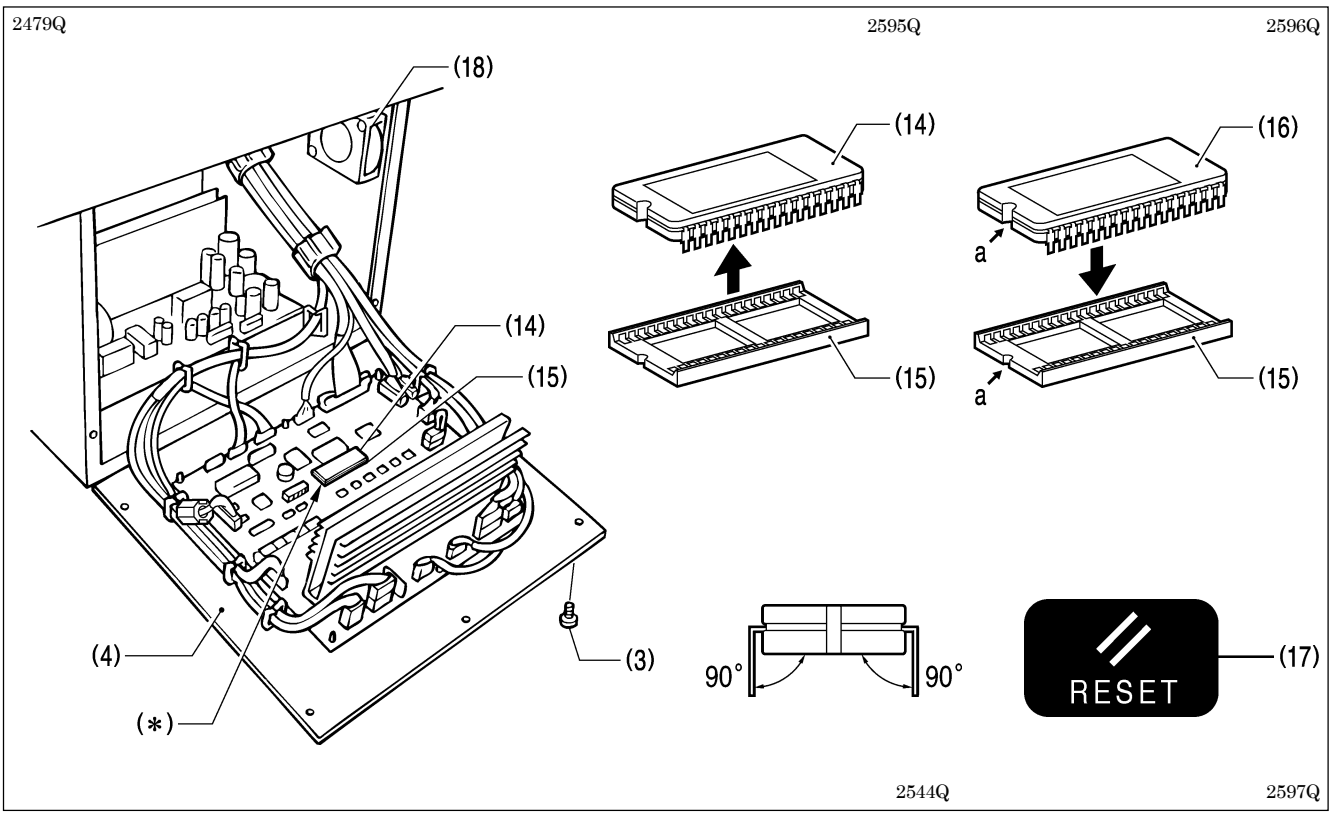

11. Replace PROM control assembly with one which contains sewing data.
    1) Use the special tool to remove the PROM control assembly (14) from the PROM socket (15).
       * Store the removed PROM control assembly in the special case provided.
    2) Bend the pins of the PROM control assembly which contains sewing data (16) so that they are at an angle of approximately 90°.
    3) Make the directions of the PROM control assembly (16) and the PROM socket (15) same so that the portions (a) come on the same side, and press the PROM gently into the socket while checking that the pins of the PROM are going into the socket properly.

    Note:
    - If the PROM has been replaced, press the RESET switch (17) while turning on the power in order to initialize the memory. All of the user programs, cycle programs and memory switches which have been recorded will then be cleared.
    - The PROM which is installed at the time of shipment from the factory does not include any sewing data. If you try to change the program number without replacing the PROM, error “E-b1” will be displayed.
      To create sewing data, use the PS-3000 electronic pattern sewer/reader (sold separately).
12. Tighten the cover (main P.C. board mounting plate (4)) with the six screws (3).

    Note:
    Check that the cords do not come into contact with the fan (18) and that they are not clamped by the cover at this time.

Note:
Check that the main PROM (*) is version MN-L or later.

3-12. Piping

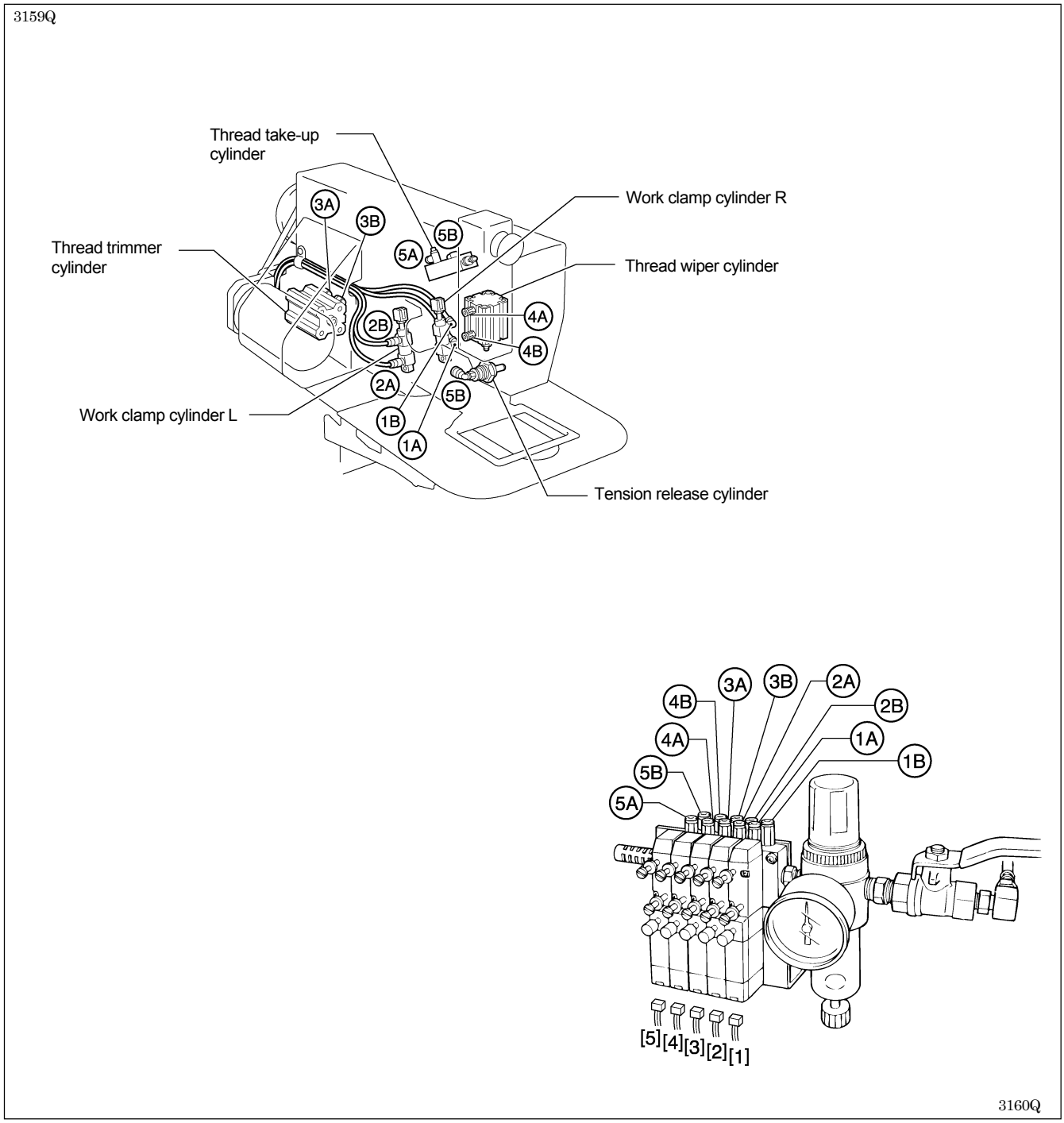

Connect air tubes in accordance with the identified numbers in the figure.

* Light work clamp mode can be used by changing over the air tube connections of work clamp cylinders. (Refer to “14. Setting the work clamp mode”.)

3-12-1. Installing the air unit

Make sure that the air unit does not touch the control box or the work table leg.

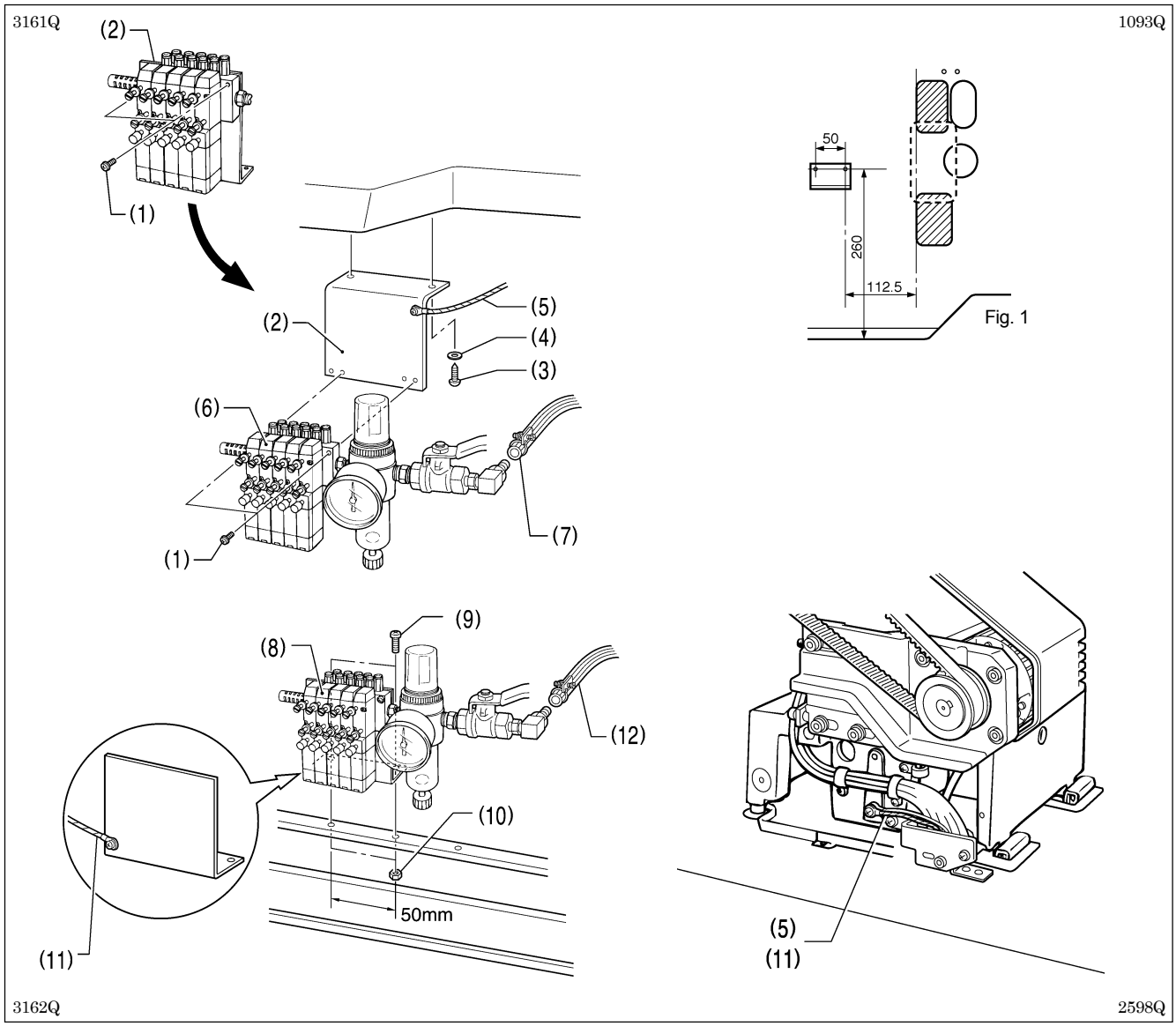

<When installing to the underside of the work table>

1. Remove the two screws (1) and the valve setting plate (2).
2. Turn the valve setting plate (2) upside down, and install it to the underside of the work table using the two wood screws (3) and washers (4) which are provided as accessories.
   * At this time, install the valve setting plate (2) in a position where it will not be in the way when using the machine. (The recommended installation position is shown in Figure 1.)
3. Install the ground cord (5) to the machine head.
4. Install the air unit (6) to the valve setting plate (2) with two screws (1).
5. Connect the air hose (7).
6. Adjust the air pressure. (Refer to “10-10. Adjusting the air pressure”.)

<When installing to a beam>

1. Make holes in the beam as shown in the illustration above. (Button hole diameter is 5.4 mm. The pitch is 50 mm.)
2. Install the air unit (8) to the beam with two accessory screws (9) and two bolts (10).
3. Install the ground cord (11) to the machine head.
4. Connect the air hose (12).
5. Adjust the air pressure. (Refer to “10-10. Adjusting the air pressure”.)

3-12-2. Adjusting the speed controller

The speeds at which the work clamps and other devices operate can be adjusted by loosening or tightening the valve control knobs. The speeds should be adjusted to speeds which are suitable for the intended application.
When the power is turned off, the operation of the devices can be checked by pressing the switches.

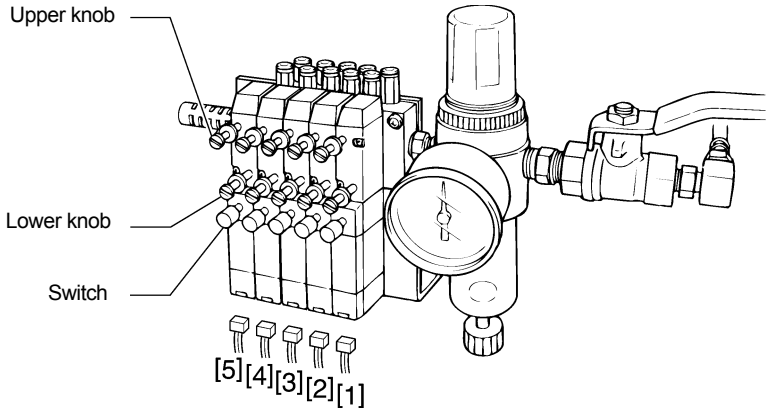

3163Q

1. Work clamp (Valve 1 and 2)
   Adjust the control knobs so that the left and right work clamps both operate at the same speed.
   * If the upper control knob is tightened, the raising speed becomes slower; if it is loosened, the raising speed becomes faster.
   * If the lower control knob is tightened, the lowering speed becomes slower; if it is loosened, the lowering speed becomes faster.
2. Thread trimmer (Valve 3)
   Fully open the upper and lower control knobs. Then turn the lower control knob to adjust the thread trimming speed as required.
3. Thread wiper (Valve 4)
   Fully open the upper and lower control knobs.
4. Tension release and thread take-up (Valve 5)
   Fully open the upper and lower control knobs.

3-13. Installing the belt cover

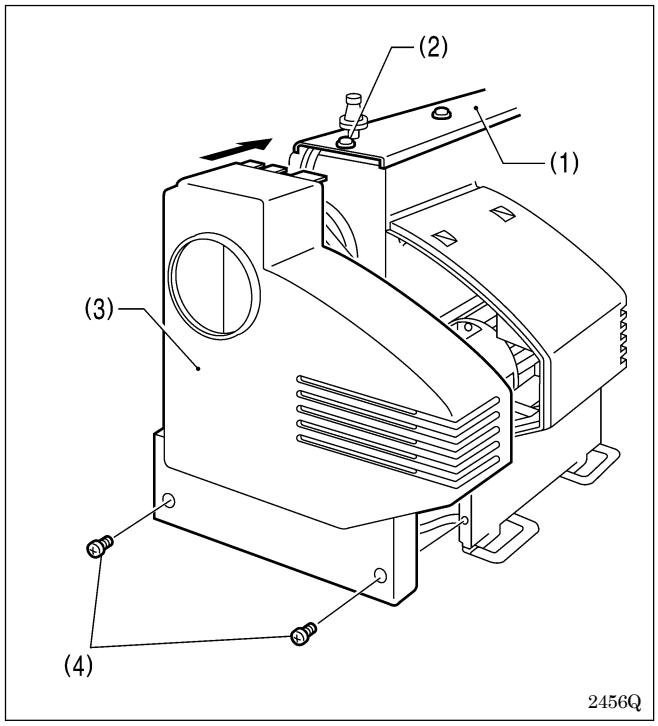

1. Loosen the screw (2) of the upper cover (1).
2. Insert the belt cover (3) in the direction of the arrow, and then secure it with the two screws (2) and the two screws (4).
   Check that the cords do not get clamped by the belt cover at this time.

* It is not necessary to remove the belt cover (3) when tilting back the machine head.

3-14. Installing the foot switch

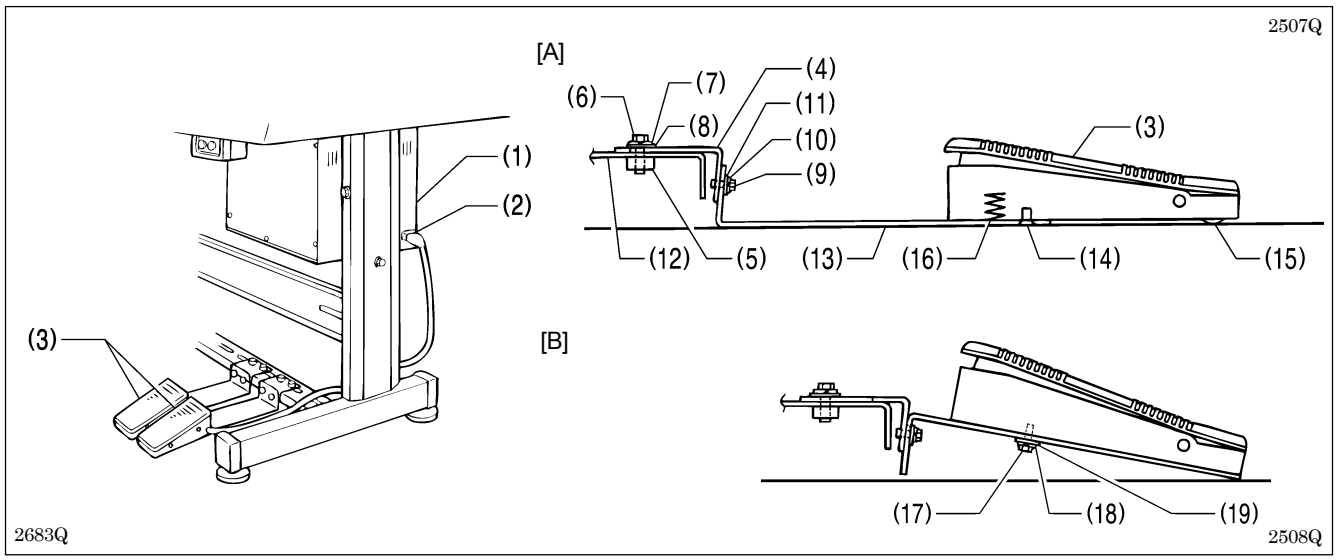

1. Insert the connector of the foot switch (3) into the connector (2) of the control box (1).
2. Install the foot switch (3) to the work table leg (12) with foot switch support plate A (4), foot switch support plate C (5), the bolt (6), spring washer (7), flat washer (8), bolt (9), spring washer (10) and flat washer (11) as shown in Figure A.

If foot switch support plate B (13) is used in a back-to-front position, it can be used as shown in Figure B.

1. Remove the screw (14) and rubber plug (15).
   * Note that the spring (16) will come out when the screw (14) is removed.
2. Turn foot switch support plate B (13) back to front, and then install it with the bolt (17), spring washer (18) and flat washer (19) as shown in Figure B.

   Note:

   If using the foot switch without installing it to the work table leg, move the foot switch at least 10 mm away from the leg. If the foot switch is not fully in contact with the work table leg when the foot switch is used, for example, if it is just hooked loosely onto the work table leg, it may cause the sewing machine to operate incorrectly.

3-15. Installing the needle sub plate

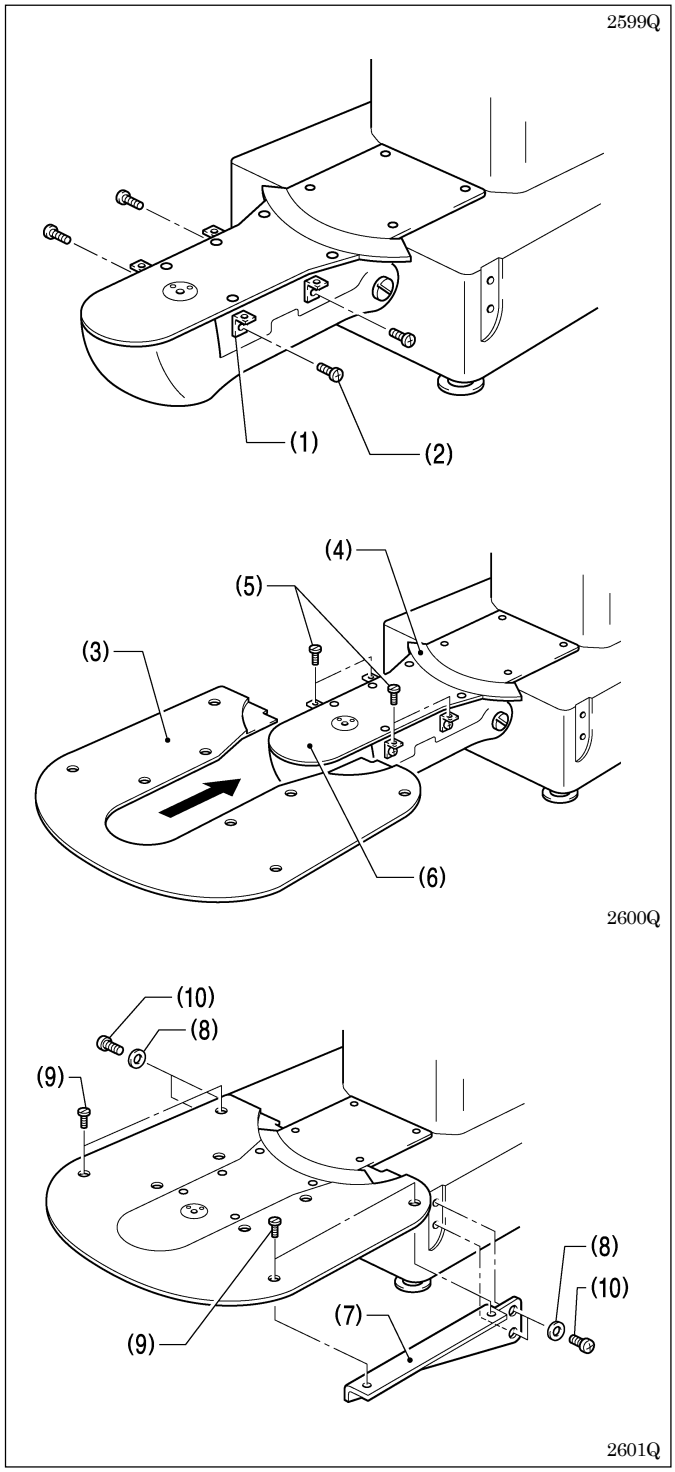

1. Install the four needle sub plate supports (1) with the four screws (2).

2. Insert the needle sub plate (3) from the front of the machine so that it is level.
   Note:
   Insert the needle sub plate (3) so that the X feed lever cap (4) sits on top of the needle sub plate (3).
3. Install the needle sub plate (3) with the four screws (5).
4. Loosen the screws (2) and make fine adjustments to the height of the needle sub plate (3) so that it is at the same height as the needle plate (6).

5. Provisionally secure the two auxiliary plate supports (7) with the washers (8) and the screws (9) and (10), and then firmly tighten the screws (9) and (10) in that order.

3-16. Installing the spool stand

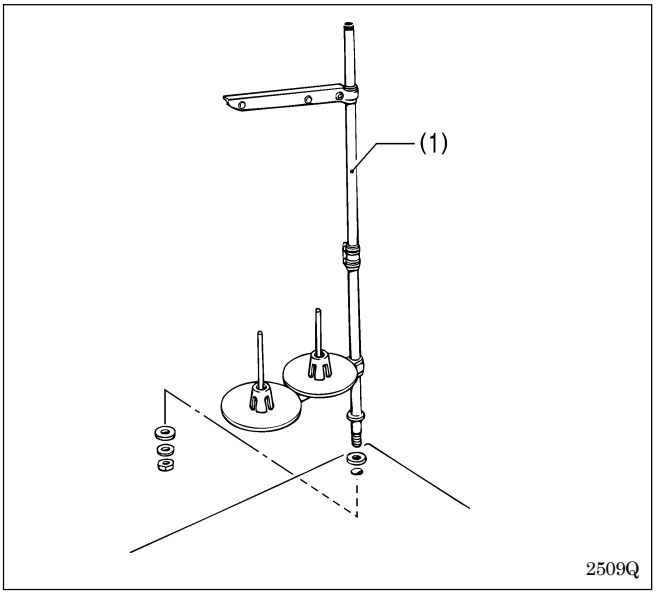

Assemble the spool stand (1) while referring to the spool stand instruction manual, and then install the spool stand (1) at the right side of the work table.

3-17. Installing the eye guard

⚠ CAUTION

Attach all safety devices before using the sewing machine.
If the machine is used without these devices attached, injury may result.

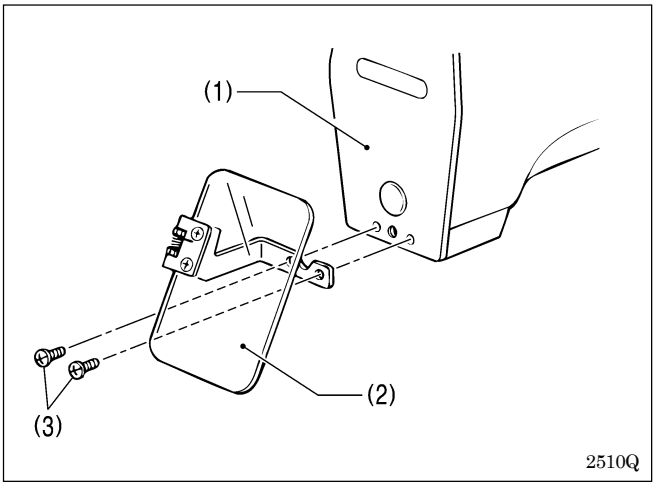

Install the eye guard assy (2) to the face plate (1) with the two screws (3).

4. LUBRICATION

⚠ CAUTION

Turn off the power switch before starting lubricating, otherwise the machine may operate if the foot switch is depressed by mistake, which could result in injury.

Be sure to wear protective goggles and gloves when handling the lubricating oil and grease, so that they do not get into your eyes or onto your skin, otherwise inflammation can result.
Furthermore, do not drink the oil or eat the grease under any circumstances, as they can cause vomiting and diarrhoea.
Keep the oil out of the reach of children.

Note 1: Fill the machine with oil when the oil level is down to about one-third full in the oil sight glass.
If oil is not added and the oil drops below this level, there is the danger that the machine may seize during operation.
Note 2: Be sure to let the machine operate for a while after adding the oil.
Note 3: If there is no more oil on the felt of the shuttle race base, problems with sewing may result, so add oil to the felt until it is slightly soaked.
Note 4: Use only specified Brother oil (Nisseki Mitsubishi Sewing Lube 10N;VG10) for the machine oil.

4-1. Lubrication points

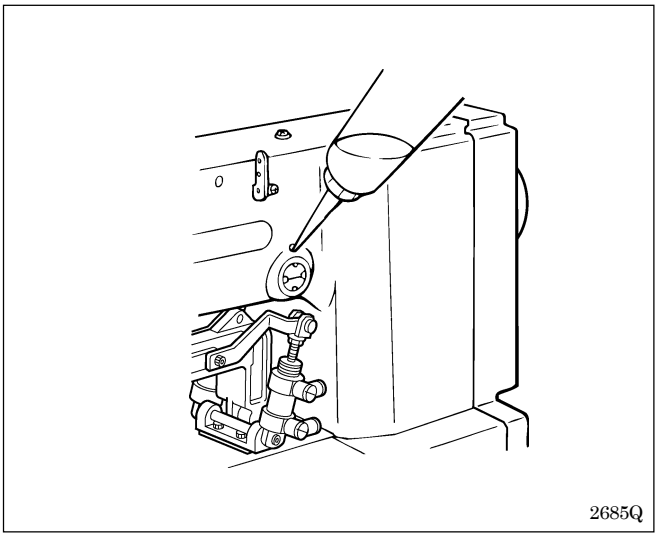

1. Fill the arm-side oil tank with oil.

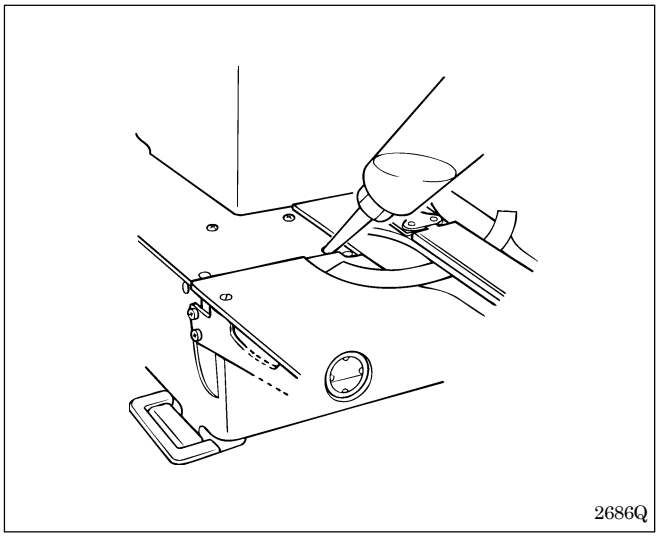

2. Fill the bed-side oil tank with oil

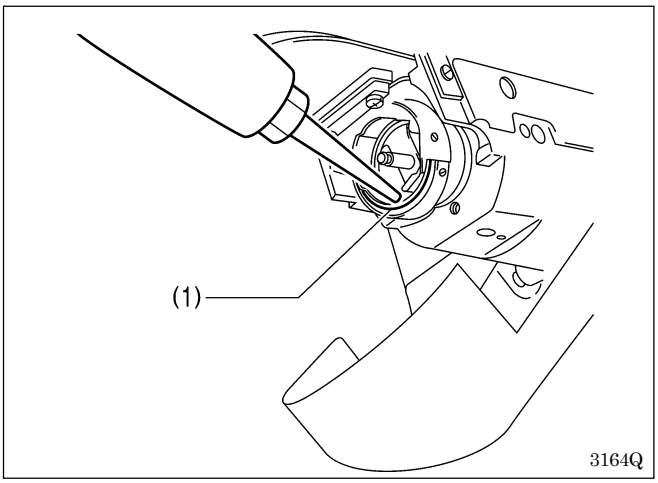

3. Add oil to the races (1) of the rotating hook and shuttle hook.
   * When setting up the sewing machine and when it hasn't been used for an extended period of time, be sure to add 2-3 drops oil to the felt.

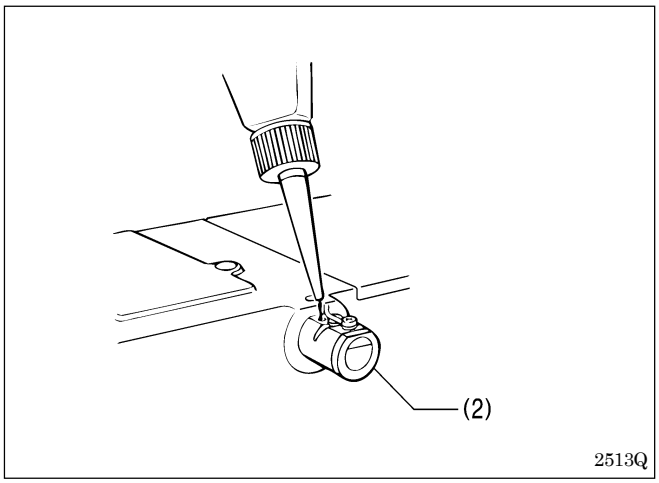

4. Fill the liquid cooling tank (2) with silicon oil (100 mm^2/s).

5. OPERATION

5-1. Name and function of each operation panel item

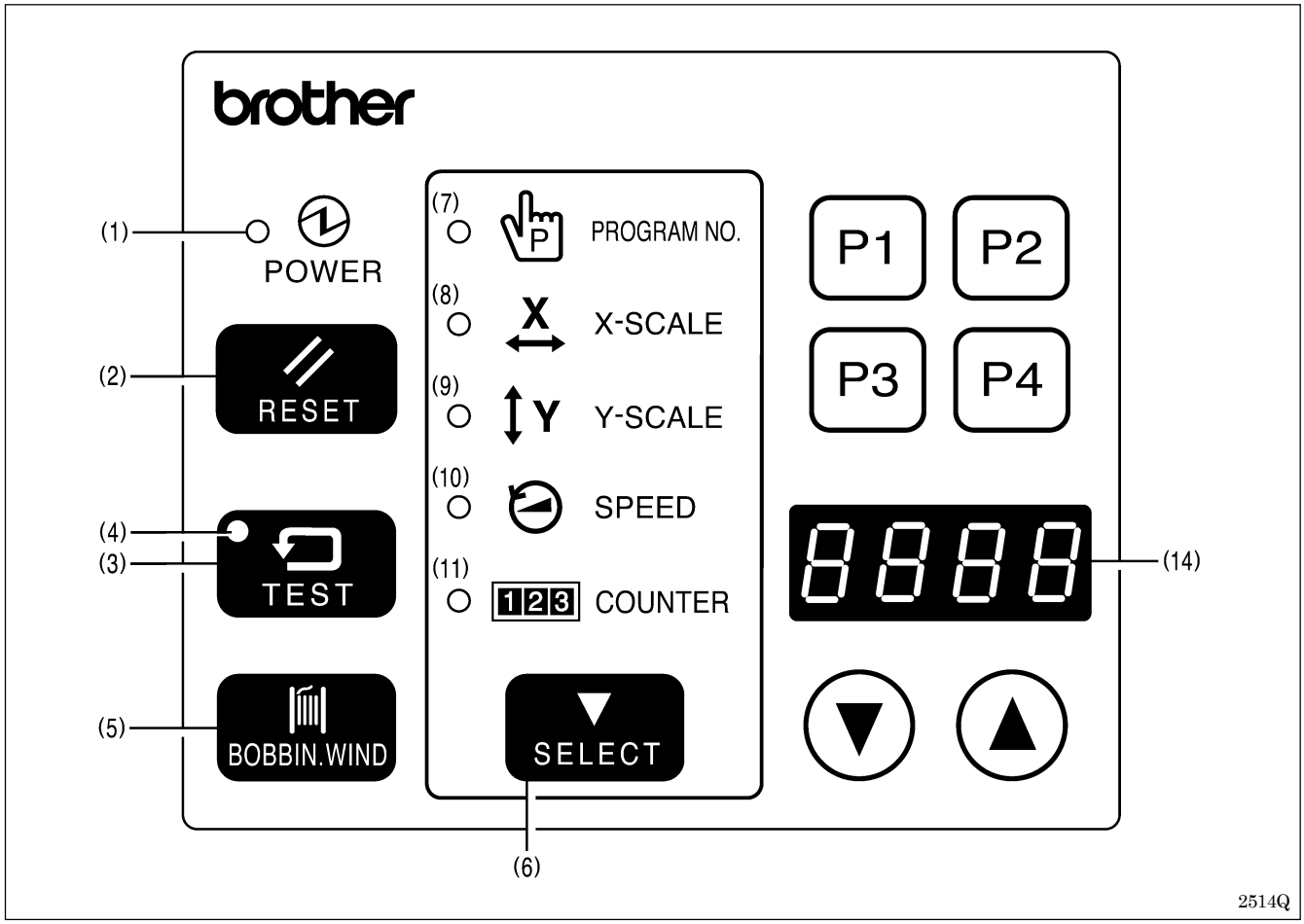

(1) POWER indicator.....Illuminates when the power switch has been turned on.

(2) RESET switch .....Press this switch to reset the machine when an error occurs.

(3) TEST switch .....Use this switch when you want to operate only the feed mechanism in order to check a pattern.

(4) TEST indicator .....Illuminates when the TEST switch has been pressed.

(5) BOBBIN. WIND switch .....Press this switch to wind the lower thread.

(6) SELECT switch .....Use this switch to select a menu (program number, X and Y feed, speed and counter). Each time the switch is pressed, one of the menu indicators ((7) to (11)) illuminates, and the setting for that menu item appears in the display (14). The illuminated indicator changes as follows each time the switch is pressed.

→ PROGRAM NO. indicator (7)→X-SCALE indicator (8)→ Y -SCALE indicator (9)→SPEED indicator (10)→COUNTER indicator(11)

(7) PROGRAM NO. indicator.....Illuminates when the SELECT switch (6) is pressed to shown the program number setting.

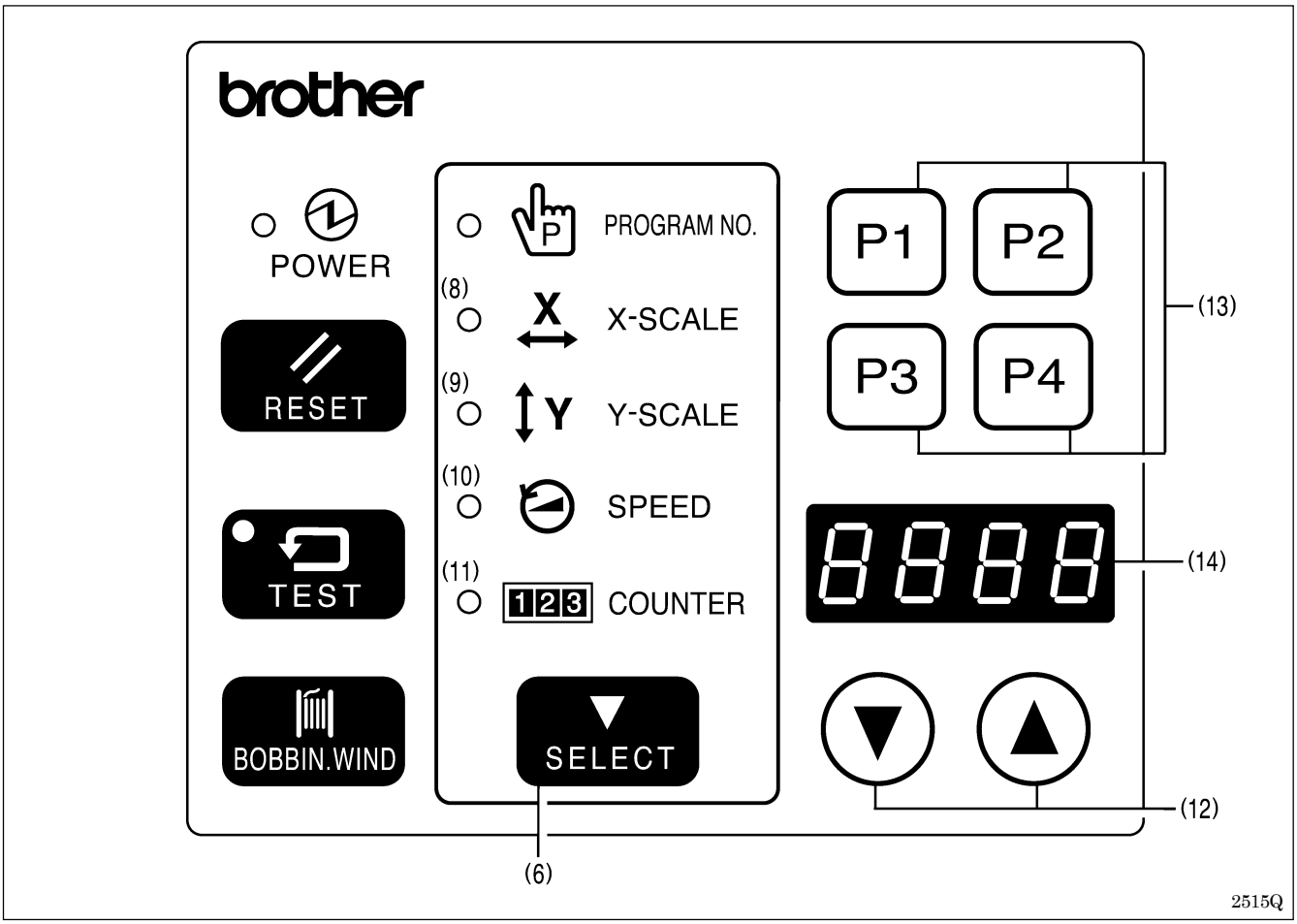

(8) X-SCALE indicator.....Illuminates when the SELECT switch (6) is pressed to shown the X-scale setting.

(9) Y-SCALE indicator.....Illuminates when the SELECT switch (6) is pressed to shown the Y-scale setting.

(10) SPEED indicator.....Illuminates when the SELECT switch (6) is pressed to shown the speed setting.

(11) COUNTER indicator.....Illuminates when the SELECT switch (6) is pressed to show the bobbin thread or production counter setting.

(12) DISPLAY SET switches.....Used to change the menu details which are displayed in the window (14).

(13) User program switches.....Used to set and select user programs.

(14) Display window.....This display window will indicate the current statu for the selected menu, error or memory switch.

5-2. Operating procedure

Preparation
Turn on the power switch.
* The POWER indicator (1) will illuminate and the program number will flash in the display window (14).

	Factory default	Variable range
Program No.	0*1	100- *2
X-scale (%)	100	20 - 200
Y-scale (%)	100	20 - 200
Speed (rpm)	2,000	1,000 - 2,200

*1 For checking the origin points for X and Y feed
*2 Custom-made program

Note when creating additional data
When sewing data with a small number of stitches (15 stitches or less) is sewn repeatedly (short cycle operation), the upper shaft motor may overheat and the “E-20” error code may be generated.

5-2-1. Setting the program number

1 Press the SELECT switch (6) until the PROGRAM NO. indicator illuminates.

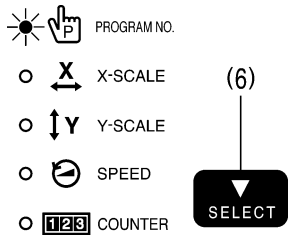

2516Q

2 Press the DISPLAY SET switches (12) until the desired program number is flashing in the display window.

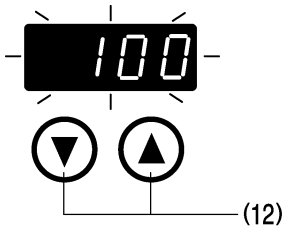

2602Q

3 Depress the work clamp switch to lower the work clamp, and depress the start switch.

The display will stop flashing and illuminates steadily, and the feed mechanism will move to the sewing start position.

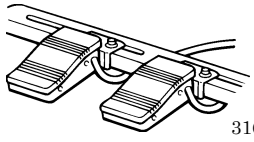
3165Q

This completes the setting of the program number.

5-2-2. Setting the X-scale and Y-scale

1 Press the SELECT switch (6) until the X-scale or Y-scale indicator illuminates.

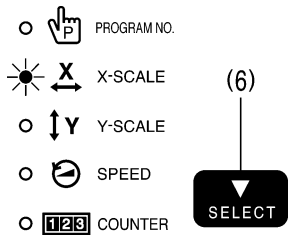

2518Q

2 Press the DISPLAY SET switches (12) until the desired scale setting is flashing in the display window.
(The setting is displayed as a percentage.)

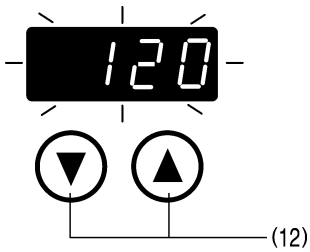

2519Q

3 Depress the work clamp switch to lower the work clamp, and depress the start switch.

The display will stop flashing and illuminates steadily, and the feed mechanism will move to the sewing start position.

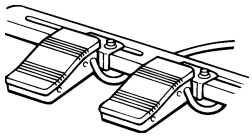
3165Q

This completes the setting of the X-scale or Y-scale.

Note:
* Be sure to check the sewing pattern (refer to page 24) after setting has been completed to make sure that the needle hole does not go out of the area circumscribed by the work clamp.
* The needle racking width for backtack stitches (with stitch widths of 1 mm or less) is not enlarged or reduced. If this results in problems, set memo-0d to "ON" to enlarge or reduce the needle racking width for backtack stitches.

5-2-3. Setting the sewing speed

1 Press the SELECT switch (6) until the SPEED indicator illuminates.

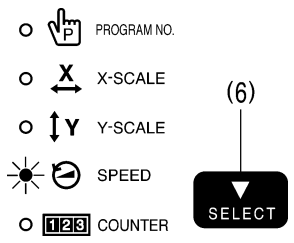

2 Press the DISPLAY SET switches (12) until the desired speed setting is flashing in the display window.

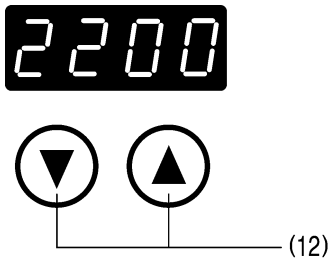

Note:
Be sure to check the sewing pattern (refer to page 24) after setting has been completed to make sure that the needle hole does not go out of the area circumscribed by the work clamp.

5-3. Operating the foot switch

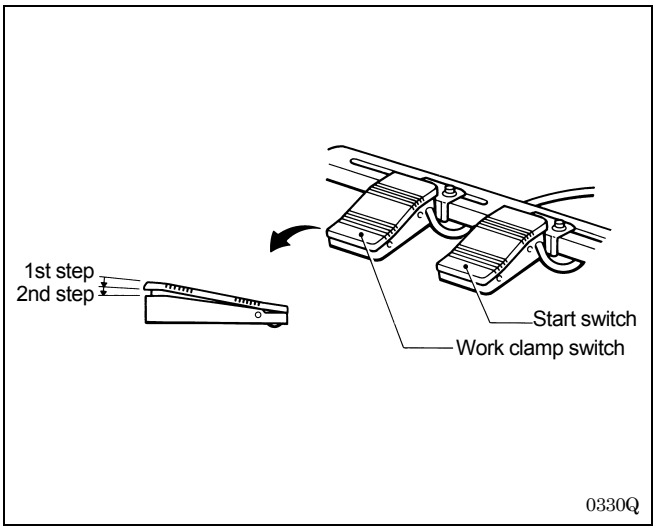

When the work clamp switch (left side) is depressed to step 1, the work clamps on both sides are lowered.
The work clamp lowering pattern can be set to a variety of different patterns. (Refer to “14. SETTING THE WORK CLAMP MODE”.
When the start switch (right side) is depressed, sewing starts.

5-4. Operating the emergency stop switch

If the emergency stop switch is pressed while normal sewing or test sewing is being carried out, the sewing machine will immediately stop operating.

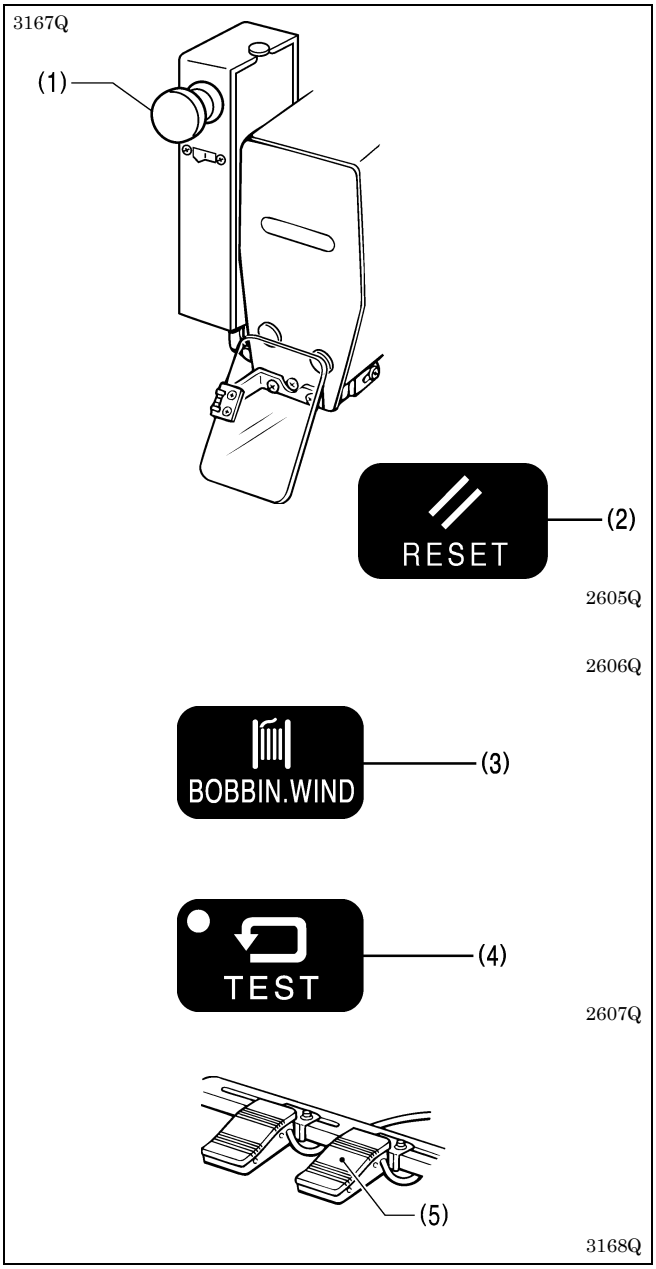

Canceling an emergency stop

1. Turn the emergency stop switch (1) clockwise and then pull it out to release the lock.
2. Press the RESET switch (2) on the control panel.
   * The electronic alarm will stop sounding.
3. If not joining a new thread, press the BOBBIN. WIND switch (3) to trim the thread. Then, press the RESET switch (2) once more so that the display panel flashes. Turn the pulley by hand to set the needle to the needle up stop position, and then continue with sewing.

Continuing sewing from a stopping point

If the emergency stop switch was pressed because a thread breakage occurred or the lower thread ran out, sewing can be resumed from the point where the thread ended.

1. Turn the emergency stop switch (1) clockwise and then pull it out to release the lock.
2. Press the RESET switch (2) on the control panel.
   * The electronic alarm will stop sounding.
3. Press the BOBBIN. WIND switch (3) to trim the thread.
4. Press the BOBBIN. WIND switch (3) once more.
   * The work clamp will move backward one stitch at a time while this switch is being pressed. If the work clamp moves back too far, press the TEST switch (4) to move the work clamp forward. Press the TEST switch (4) once more when you would like the work clamp to stop.
5. Once the work clamp has returned to the desired position, depress the start switch. The sewing machine will then resume sewing.

5-5. Operating the thread wiper switch

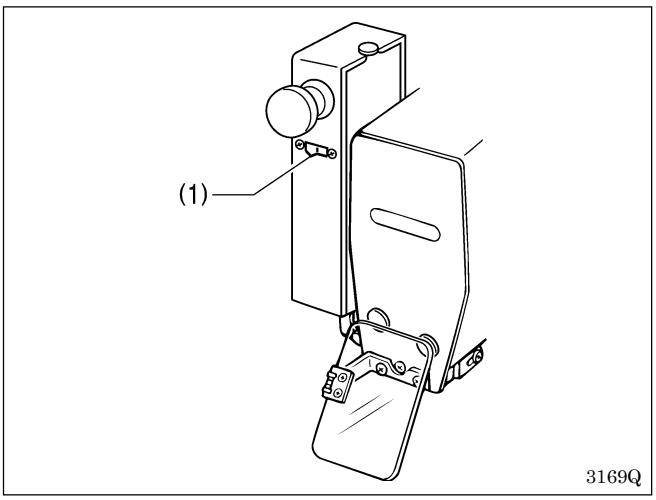

The thread wiper can be turned on and off using the thread wiper switch (1).

Note:

When memory switch 2F (memo-2F) is ON, turn off the power switch before operating the thread wiper switch.
If you operate the thread wiper switch while the power is still turned on, the work clamp may obstruct the thread wiper.

6. CHECKING THE SEWING PATTERN

When checking by operating only the feed mechanism

1. Turn on the power switch.
(The POWER indicator will illuminate and the program number will flash in the display window.)

▼

2. Press the TEST switch.
(The TEST indicator will illuminate.)

0090Q

▼

3. Depress the work clamp switch (1) to lower the work clamp, and depress the start switch (2).
(The feed mechanism will move to the sewing start position and the program number will stop flashing.)
* This operation is only carried out the first time that a program has been selected or the size ratio has been changed.

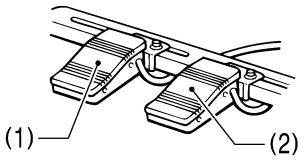

3170Q

▼

4. Depress the work clamp switch (1) to lower the work clamp, and depress the start switch (2). Only the feed mechanism will move.
[Check that the needle hole (3) does not protrude past the frame of the work clamp (4).]
* If you depress the work clamp switch (1) and keep it depresses after the feed mechanism has started to move, the feeding speed will increase.
* If you would like to stop the feed while it is moving, press the TEST switch.

3171Q

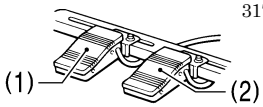

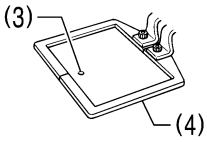

3172Q

▼

5. Press the TEST switch.
(The TEST indicator will switch off and the test mode will be cleared.)

0092Q

▼

6. Depress the work clamp switch (1).
The work clamp will rise and the preparation for sewing will be completed.

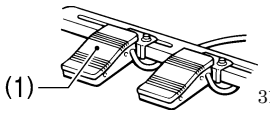

3173Q

To ensure safety during use .....
You can prevent accidental changes being made to programs by setting DIP switches 7 and 8 to ON.
When DIP switch 7 is ON
... The sewing pattern cannot be enlarged.
When DIP switch 8 is ON
... The program number cannot be changed.

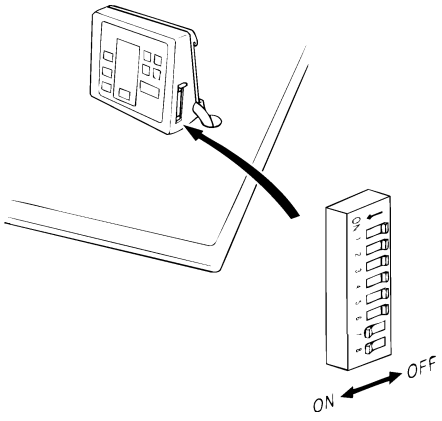

2459Q

7. CORRECT USE

7-1. Installing the needle

⚠ CAUTION

Turn off the power switch before installing the needle, otherwise the machine may operate if the foot switch is depressed by mistake , which could result in injury.

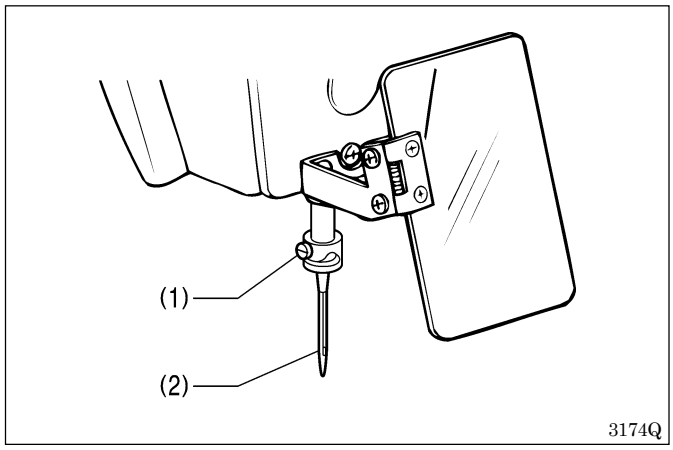

Loosen the set screw (1), insert the needle (2) as far as it will go so that the groove is facing toward you, and then tighten the set screw (1).

7-2. Threading the upper thread

⚠ CAUTION

Turn off the power switch before threading the thread, otherwise the machine may operate if the foot switch is depressed by mistake, which could result in injury.

Thread the upper thread correctly as shown in the illustration below.

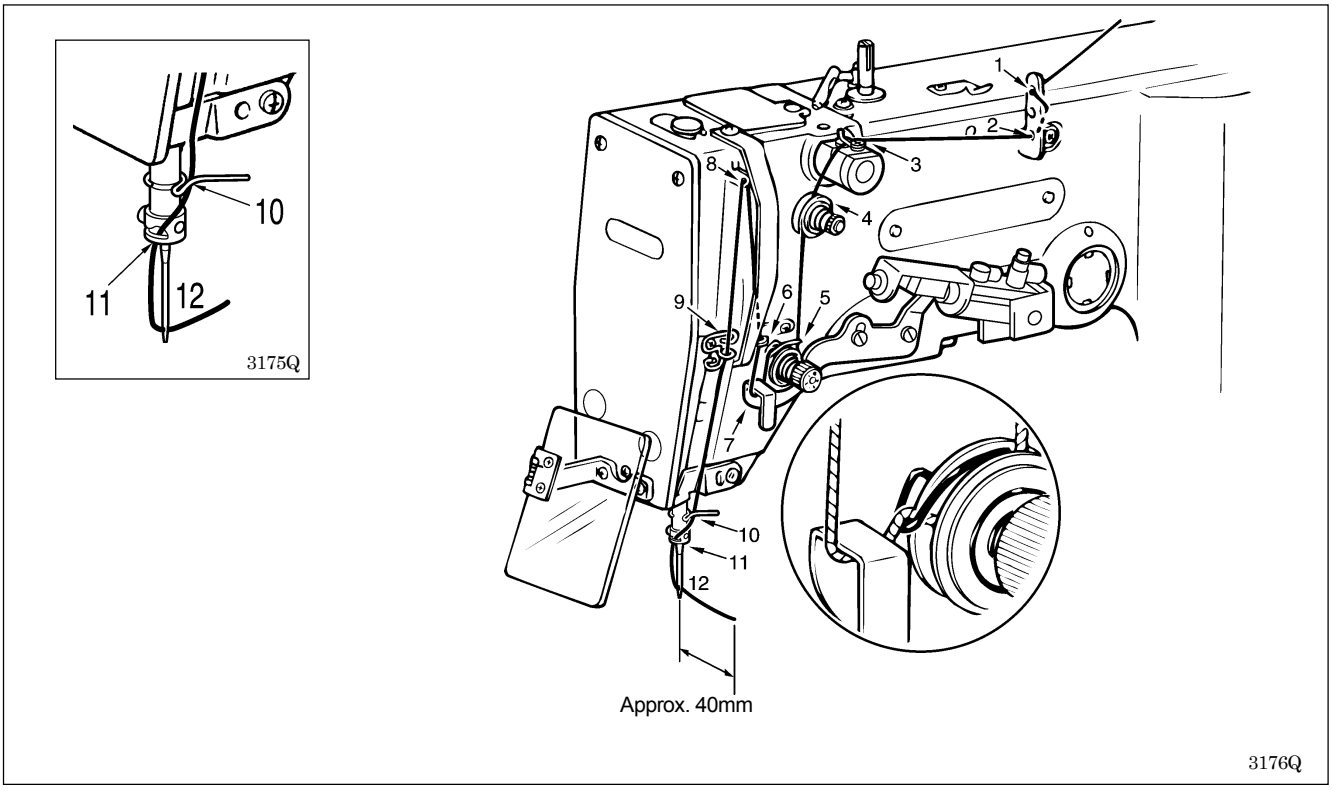

7-3. Winding the lower thread

⚠ CAUTION

Do not touch any of the moving parts or press any objects against the machine while winding the lower thread, as this may result in personal injury or damage to the machine.

1. Place the bobbin all the way onto the shaft.

2. Thread the thread as shown in the illustration at right, wind the thread around the bobbin several times in the direction of the arrow, and then press the bobbin presser (1).

3. Turn on the power switch.
(The POWER indicator on the operation panel will illuminate.)

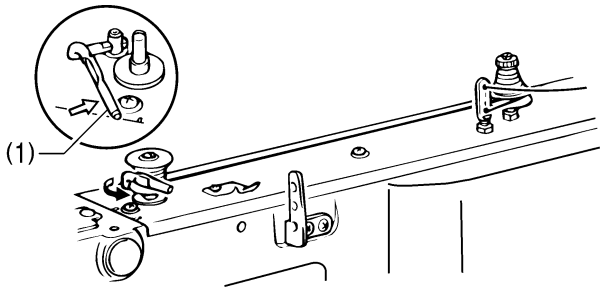

2527Q

4. Depress the foot switch (2) to move the feed mechanism to the sewing start and raise the work clamp.
Depress the work clamp switch (3) to lower the work clamp.

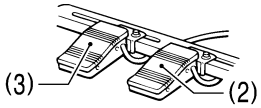

3177Q

5. Check that the needle is not touching the work clamp, and then while pressing the BOBBIN. WIND switch (4), depress the start switch (2) to start the machine. Keep depressing the start switch (2) until the lower thread stops being wound onto the bobbin.
(Release the BOBBIN. WIND switch (4) after the machine starts operating. If you release the start switch before winding is completed, depress it once more while pressing and holding the BOBBIN. WIND switch (4).)

3178Q

6. The bobbin presser (1) will automatically return to its original position after a set amount of thread (80 - 90% of the bobbin capacity) has been wound on.

7. Release the start switch (2).

8. Remove the bobbin, hook the thread onto the knife (5), and then pull the bobbin in the direction of the arrow to cut the thread.

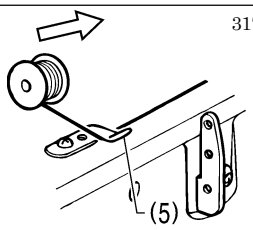

3179Q

9. To wind more thread onto the bobbin, loosen the set screw (6) and pull the bobbin presser (1) outward.

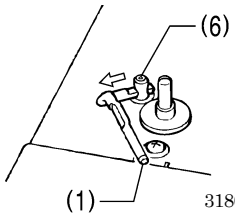

3180Q

<<If the thread winds onto the bobbin unevenly>>
If the thread winds onto the bobbin unevenly, loosen the nut (7) and turn the bobbin winder thread tension stud (8) to adjust.

* If the thread winds on as shown in A, turn the bobbin winder thread tension stud (8) clockwise; if it winds on as shown in B, turn the bobbin winder thread tension stud (8) counterclockwise.

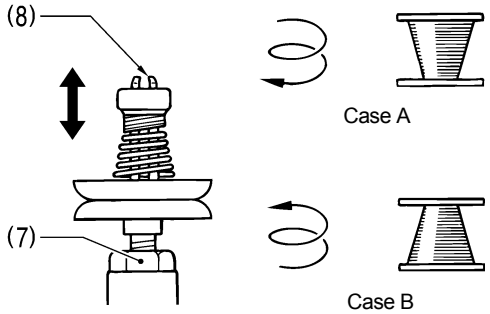

3181Q

7-4. Replacing the bobbin case and threading the thread

⚠ CAUTION

Turn off the power switch before removing or inserting the bobbin case, otherwise the machine may operate if the foot switch is depressed by mistake, which could result in injury.

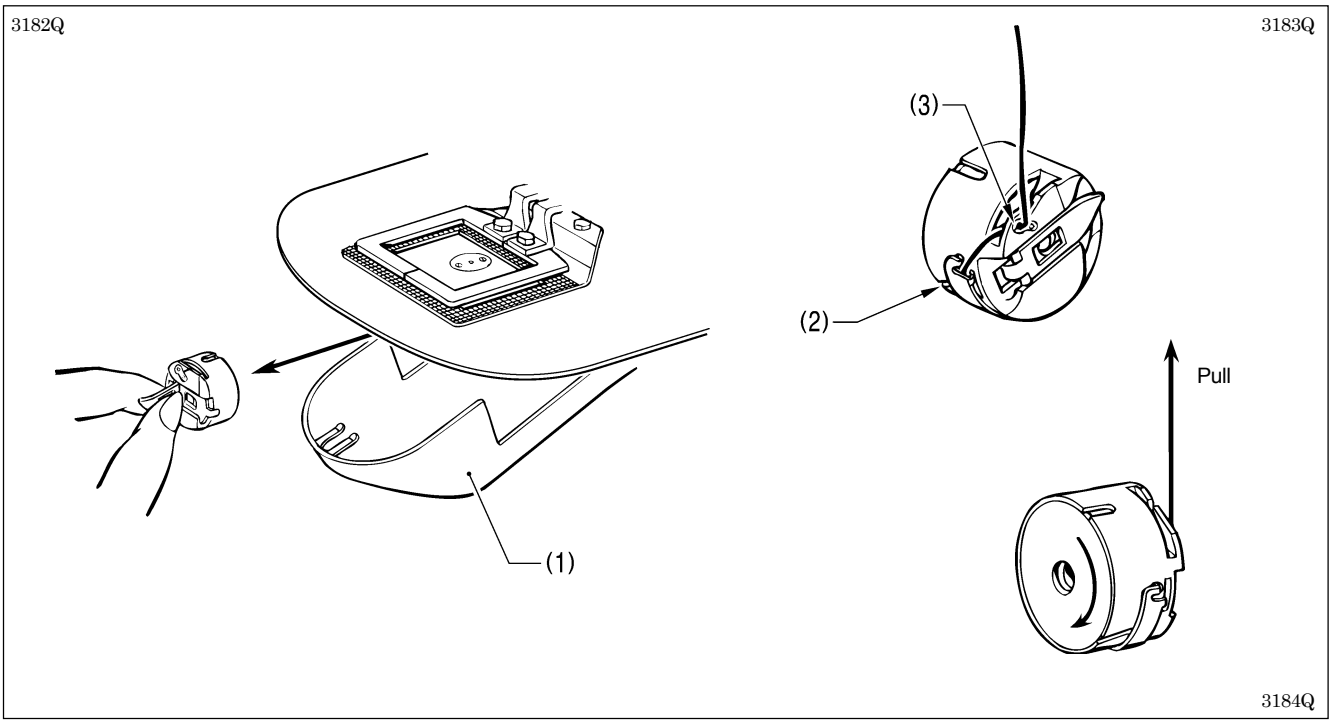

1. Pull the shuttle race cover (1) toward you to open it.
2. Insert a new bobbin into the bobbin case, and then pas the thread through the slot (2) and pull it out from the thread hole (3) approximately 30 mm. Check that the bobbin turns in the direction of the arrow when the thread is pulled at this time.

7-5. Thread tension

7-5-1. Reference thread tension

Upper thread	#4 or equivalent
Lower thread	#4 or equivalent
Upper thread tension (N)	4.5 - 5.0
Lower thread tension (N)	1.0 - 1.2
Thread take-up spring height (mm)	0 - 5
Thread take-up spring tension (N)	2.0 - 2.5
Pre-tension (N)	0.3 - 0.5

7-5-2. Lower thread tension

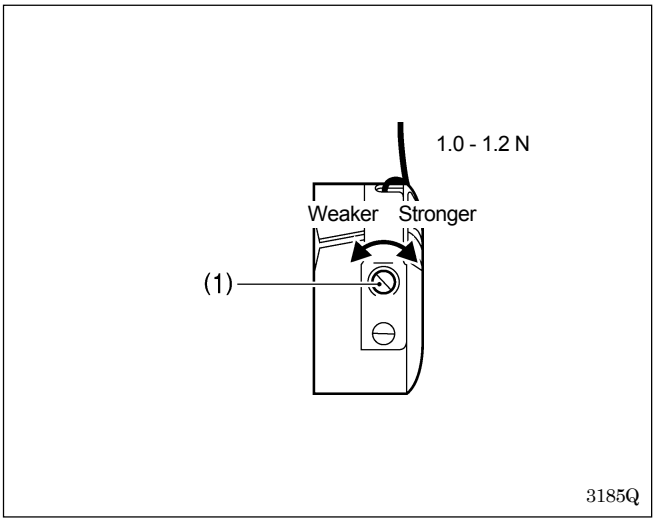

Turn the thread tension nut (1) to adjust the lower thread tension to between 1.0 - 1.2 N.

7-5-3. Upper thread tension

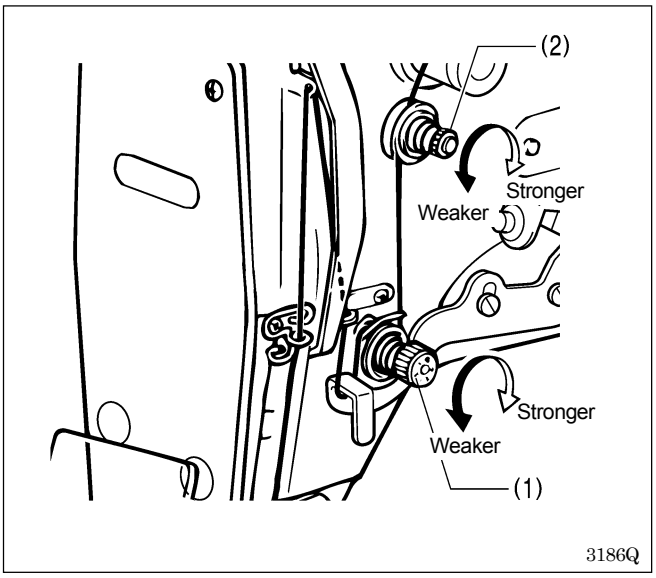

Turn the tension nut (1) (main tension) to adjust the tension as appropriate for the material being sewn.
Furthermore, turn the thread nut (2) (sub-tension) to adjust the remaining length of upper thread to 35 - 40 mm, when the thread take-up lever is not used.

7-5-4. Thread take-up spring height

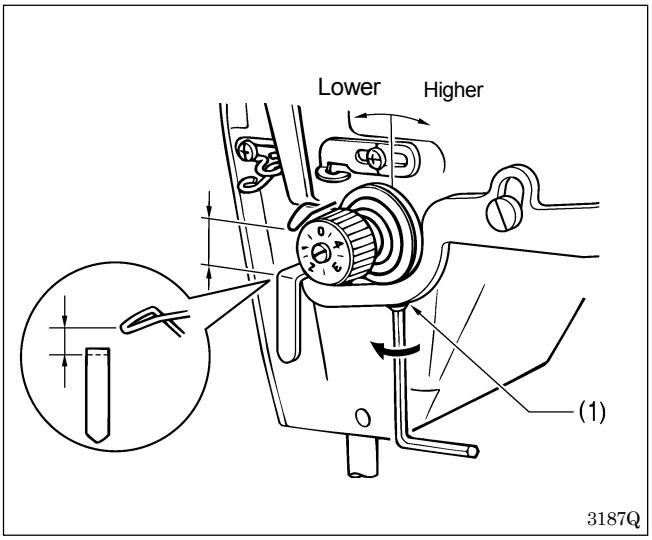

Loosen the set screw (1) and turn the tensioner body to adjust the thread take-up spring height.

7-5-5. Thread take-up spring tension

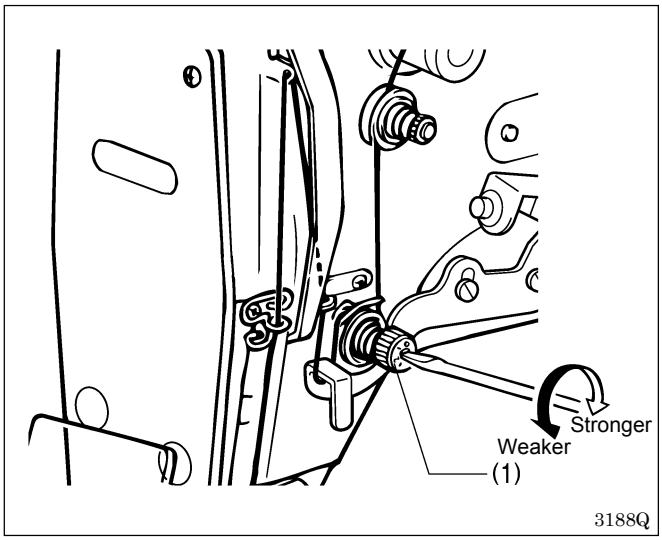

Turn the tension stud (1) with a screwdriver.

7-5-6. Adjusting arm thread guide R

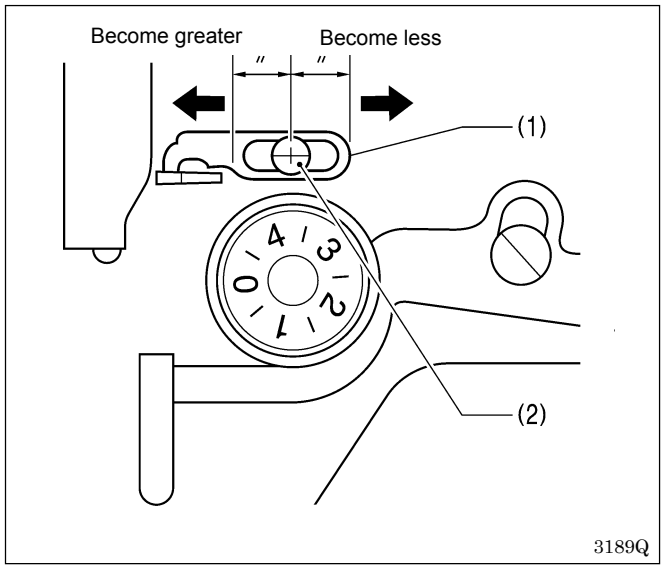

The standard position of arm thread guide R (1) is the position where the screw (2) is in the center of the adjustable range for arm thread guide R (1).
To adjust the position, loosen the screw (2) and then move arm thread guide R (1).

* When sewing thick material, move arm thread guide R (1) to the left. (The thread take-up amount will become greater.)
* When sewing thin material, move arm thread guide R (1) to the right. (The thread take-up amount will become less.)

7-5-7. Thread take-up amount

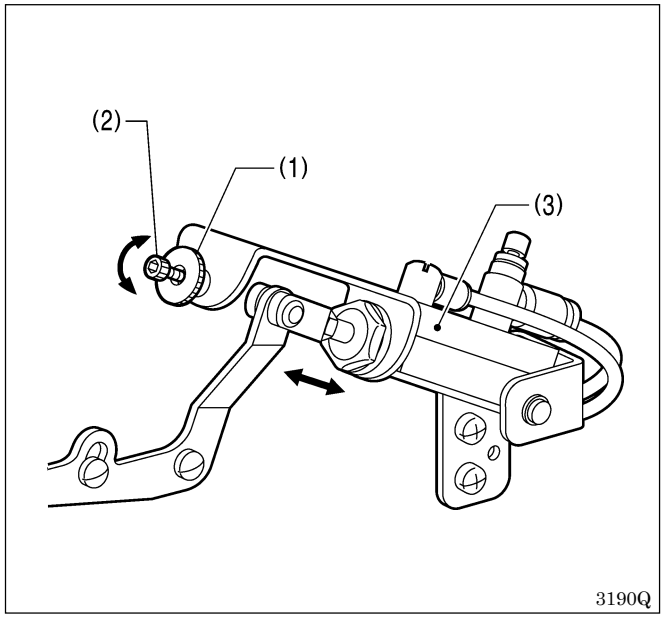

Loosen the nut (1) and move the stopper (bolt) (2) to adjust the protruding position of the cylinder (3).

* To reduce the thread take-up amount, tighten the stopper (2).
* To increase the thread take-up amount, loosen the stopper (2).

8. SEWING

⚠ CAUTION

Turn off the power switch at the following times, otherwise the machine may operate if the foot switch is depressed by mistake, which could result in injury.

- When threading the needle
- When replacing the needle and bobbin
- When not using the machine and when leaving the machine unattended.

Do not touch any of the moving parts or press any objects against the machine while sewing, as this may result in personal injury or damage to the machine.

Before starting sewing .....

- Check that the needle bar is at its highest position. Turn the machine pulley so that the index mark (1) on the pulley is between the marks (2) on the belt cover.
  * If the machine pulley stop position is incorrect, error "E-50" may be displayed, or the wiper may come into contact with the needle and break the tip of the needle.

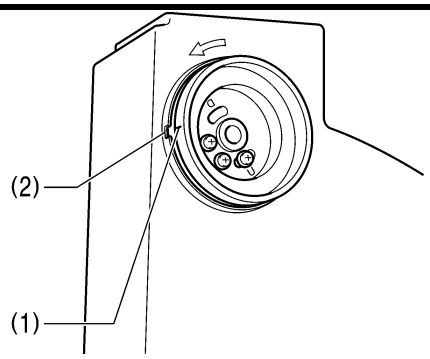

2462Q

1. Turn on the power switch.
(The POWER indicator will illuminate and the program number will flash in the display.)

▼

2. Depress the start switch (3).
(The feed mechanism will move to the starting position and the work clamp will rise.)

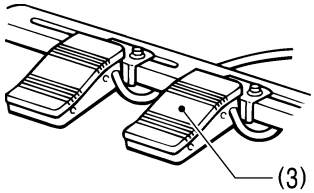

3191Q

▼

3. Place the material to be sewn under the work clamp (4), and then depress the work clamp switch (5) to lower the work clamp (4), and depress the start switch (3).

3192Q

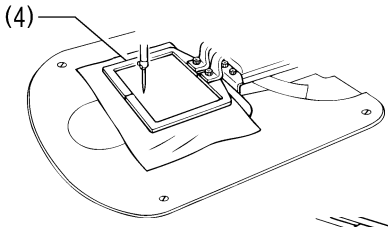

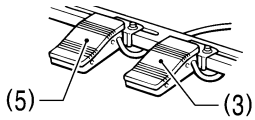

3193Q

▼

4. Once sewing is completed and the thread has been trimmed, feed will move automatically to the next starting point and the work clamp (4) will rise.

9. MAINTENANCE AND INSPECTION

⚠ CAUTION

Turn off the power switch before carrying out cleaning, otherwise the machine may operate if the foot switch is pressed by mistake, which could result in injury.

Be sure to wear protective goggles and gloves when handling the lubricating oil and grease, so that they do not get into your eyes or onto your skin, otherwise inflammation can result.
Furthermore, do not drink the oil or eat the grease under any circumstances, as they can cause vomiting and diarrhoea. Keep the oil out of the reach of children.

Wait until the motor has cooled down before cleaning the air holes.
The motor may be hot immediately after it has been used, and it may cause burns if touched.

9-1. Checking the needle

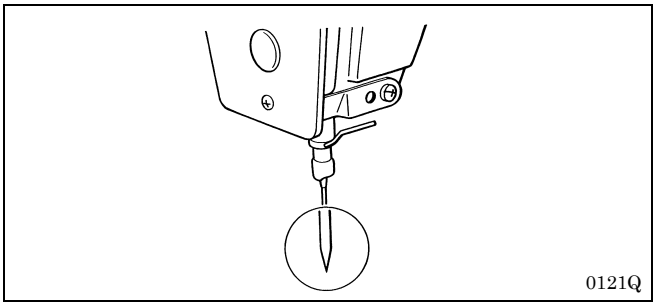

Always check that the tip of the needle is not broken and also the needle is not bent before starting sewing.

9-2. Cleaning the rotary hook

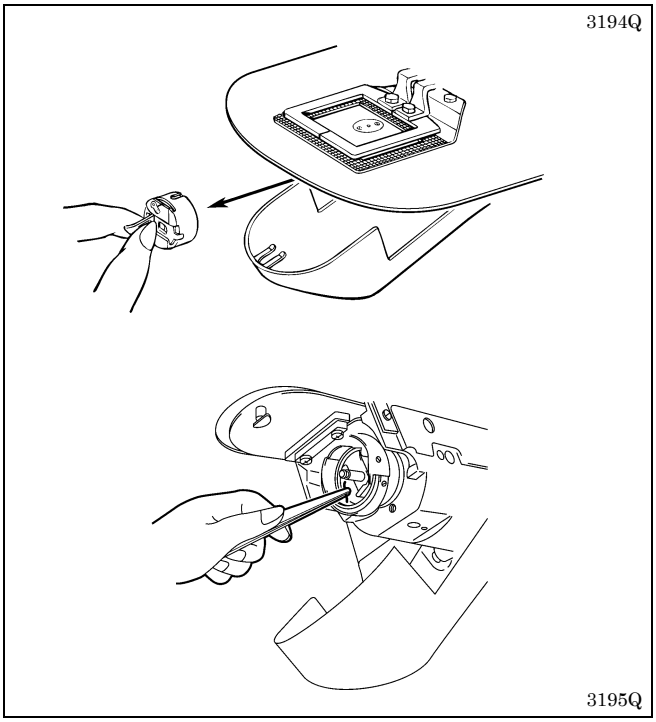

1. Pull the shuttle race cover toward you to open it, and then remove the bobbin case.

2. Clean all the dust and thread ends from the shuttle race.

9-3. Lubrication

Note1: Fill the machine with oil when the oil level is down to about one-third full in the oil sight glass. If oil is not added and the oil drops below this level, there is the danger that the machine may seize during operation.
Note2: Be sure to let the machine operate for a while after adding the oil.
Note3: If there is no more oil on the felt of the shuttle race base, problems with sewing may result, so add oil to the felt until it is slightly soaked.
Note4: Use only specified Brother oil (Nisseki Mitsubishi Sewing Lube 10N;VG10) for the machine oil.

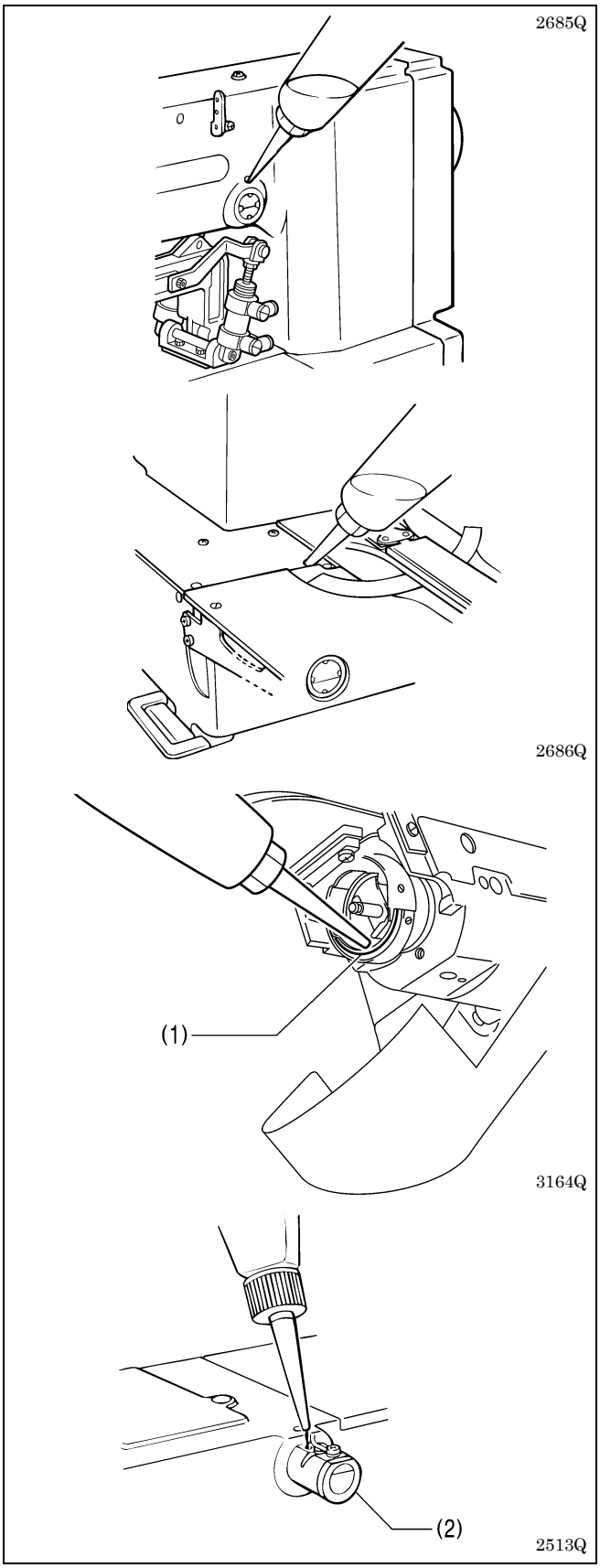

1. Fill the arm-side oil tank with oil.

2. Fill the bed-side oil tank with oil.

3. Add oil to the races (1) of the rotating hook and shuttle hook.
   * When setting up the sewing machine and when it hasn't been used for an extended period of time, be sure to add 2-3 drops oil to the felt.

4. Fill the liquid cooling tank (2) with silicon oil (100 mm^2/s).

9-4. Draining the oil

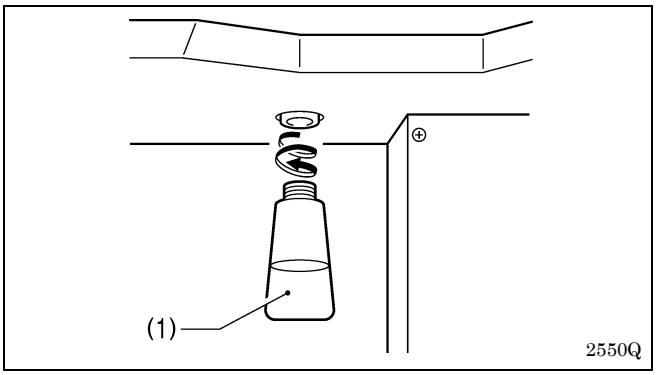

1. Remove and empty the waste oil container (1) whenever it is full.
2. After emptying the waste oil container (1), screw it back into its original position.

9-5. Cleaning the control box air inlet port

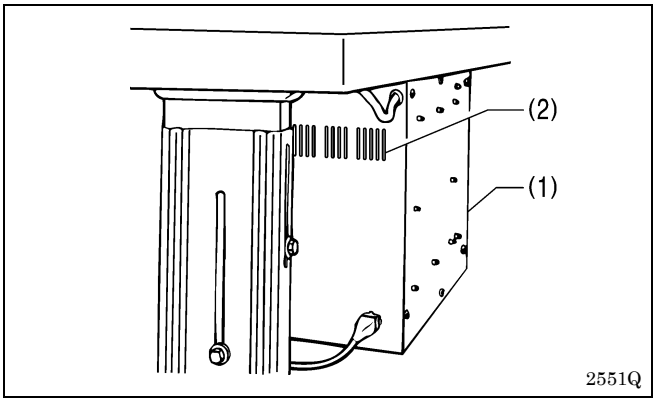

Use a vacuum cleaner to clean the filter in the air inlet port (2) of the control box (1) at least once a month.

* If the machine is used while the air inlet port is blocked, the inside of the control box will overheat.
When this happens, the overheating error code “E-d0” will be displayed and you will not be able to operate the sewing machine.

9-6. Cleaning the air holes of belt cover and frame side cover

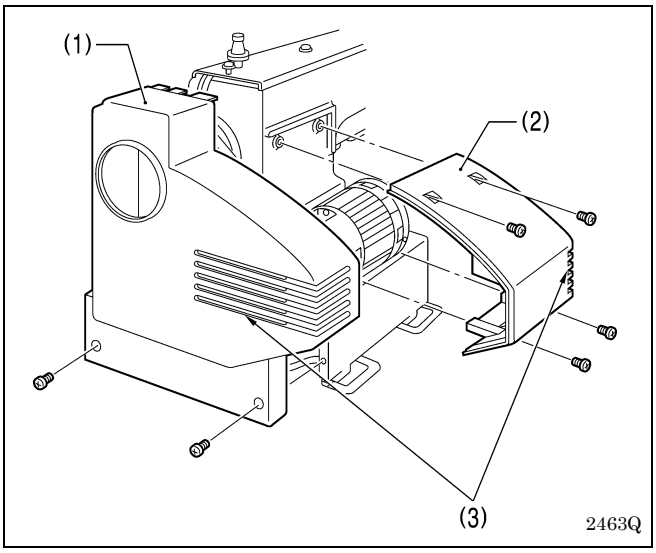

Remove the belt cover (1) and the frame side cover (2), and then clean the air holes (3).
After cleaning, install the belt cover (1) and the frame side cover (2).

* If dust collects in the air holes, it may cause the motor to overheat. The air holes should be cleaned at regular intervals.
In addition, be careful not to let any foreign matter get into the air holes.

9-7. Cleaning the eye guard

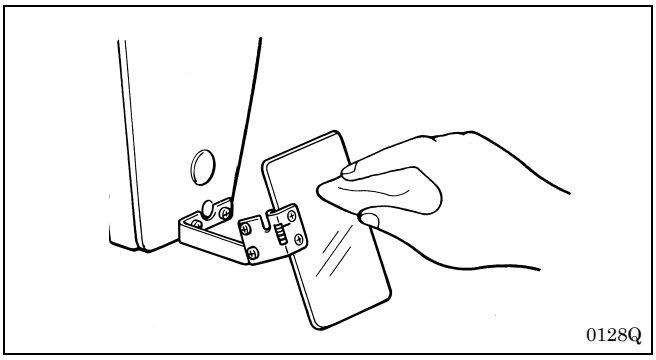

Wipe the eye guard clean with a soft cloth.
Note:
Do not use solvents such as kerosene or thinner to clean the eye guard.

10. STANDARD ADJUSTMENTS

⚠ CAUTION

- Maintenance and inspection of the sewing machine should only be carried out by a qualified technician.
- Ask your Brother dealer or a qualified electrician to carry out any maintenance and inspection of the electrical system.
- Turn off the power switch and disconnect the power cord from the wall outlet at the following times, otherwise the machine may operate if the foot switch is depressed by mistake, which could result in injury.
  - When carrying out inspection, adjustment and maintenance
  - When replacing consumable parts such as the rotary hook and knife
- Hold the machine head with both hands when tilting it back or returning it to its original position. Furthermore, after tilting back the machine head, do not push the face plate side or the pulley side from above, as this could cause the machine head to topple over, which may result in personal injury or damage to the machine.
- If the power switch and air need to be left on when carrying out some adjustment, be extremely careful to observe all safety precautions.
- If any safety devices have been removed, be absolutely sure to re-install them to their original positions and check that they operate correctly before using the machine.

10-1. Adjusting the needle bar height

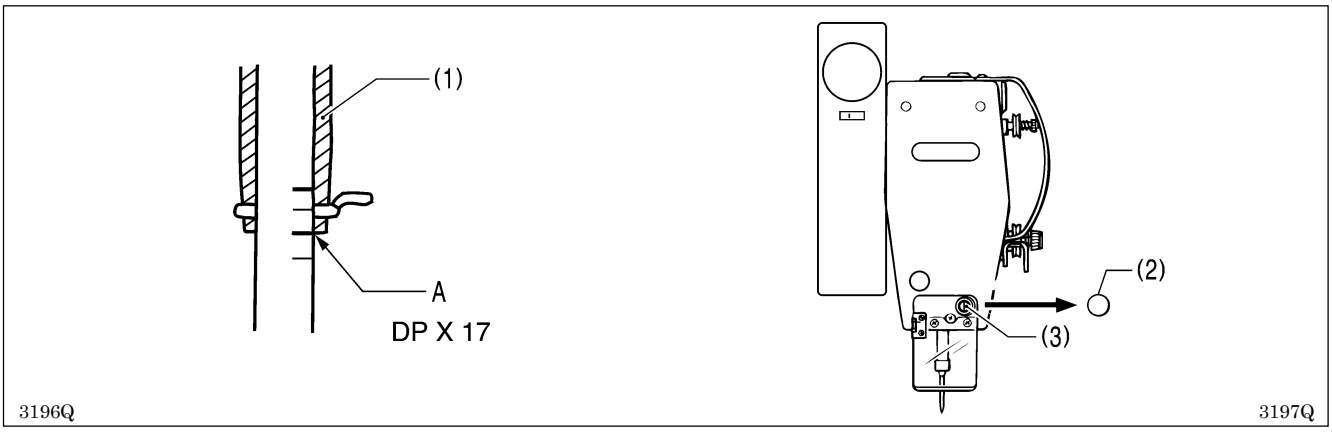

Turn the machine pulley to move the needle bar to the lowest position. Then remove the rubber plug (2), loosen the set screw (3) and then move the needle bar up or down to adjust so that the second reference line from the bottom of the needle (reference line A) is aligned with the lower edge of the needle bar bush (1).

10-2. Adjusting the needle bar lift amount

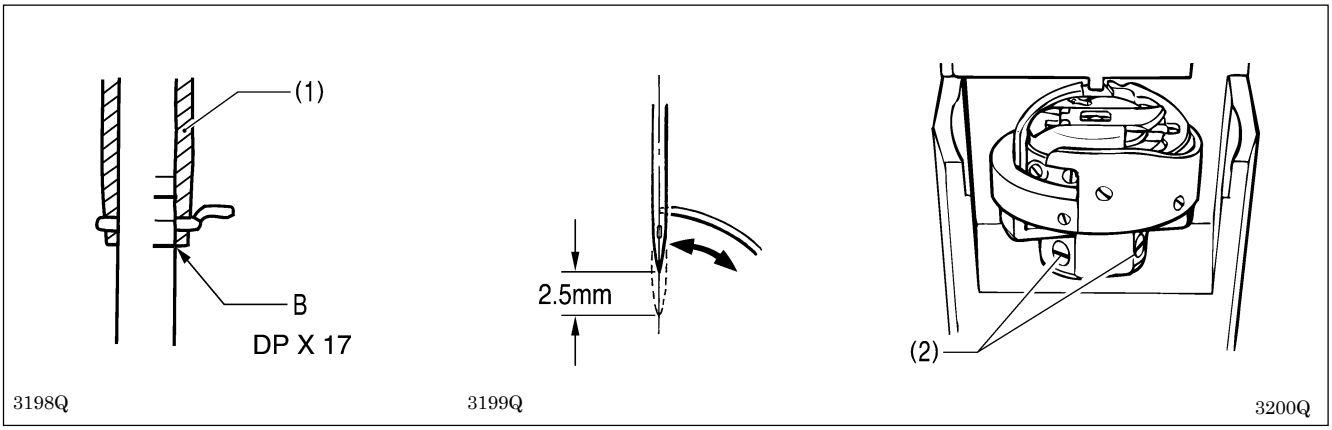

Turn the machine pulley to raise the needle bar from the lowest position until the lowest reference line on the needle (reference line B) is aligned with the lower edge of the needle bar bush (1). Then loosen the set screw (2) and move the rotary hook to adjust so that the tip of the rotary hook is aligned with the needle center line.

10-3. Adjusting the needle clearance

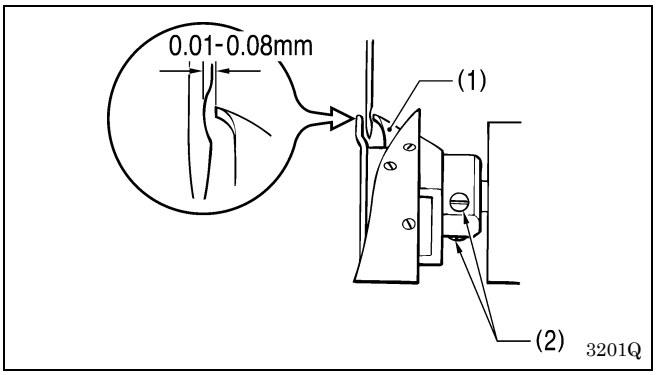

Turn the machine pulley to align the tip of the rotary hook (1) with the needle center line. Then loosen the set screw (2) to adjust so that the clearance between the needle and the rotary hook (1) is 0.01 - 0.08 mm.

10-4. Adjusting the thread take-up amount

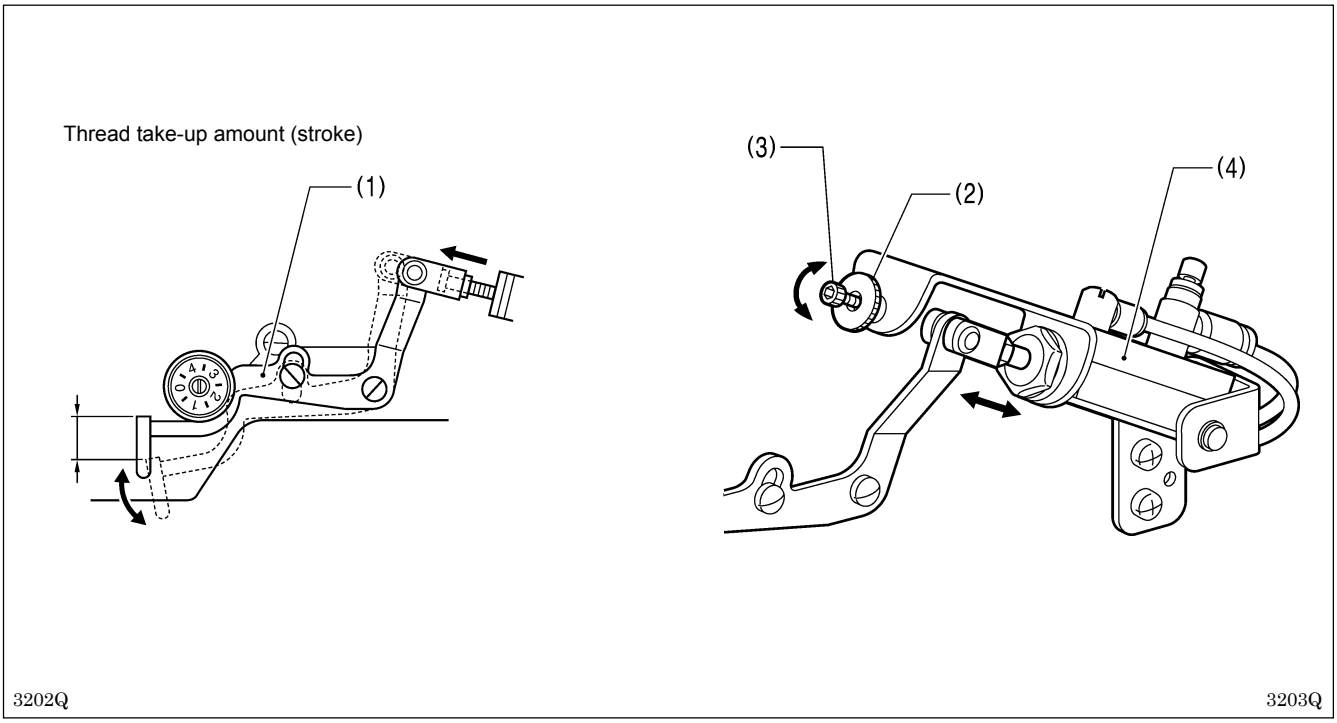

At the time of shipment from the factory, the thread take-up amount (stroke) of the thread take-up lever (1) is set to the standard setting of 7 mm. You may need to adjust this setting depending on the sewing conditions to prevent the thread from pulling out at the sewing start.

[Adjustment method]

Loosen the nut (2) and move the stopper (bolt) (3) to adjust the protruding position of the cylinder (4).

* To reduce the thread take-up amount, tighten the stopper (3).
* To increase the thread take-up amount, loosen the stopper (3).

Note:

If the stroke of the thread take-up lever (1) is shorter than necessary, the needle thread trailing length may become too short and the thread may come out of the needle. Furthermore, if it is larger than necessary, the needle thread trailing length may become too long and the underside of the article being sewn may become untidy.

10-5. Adjusting the movable knife

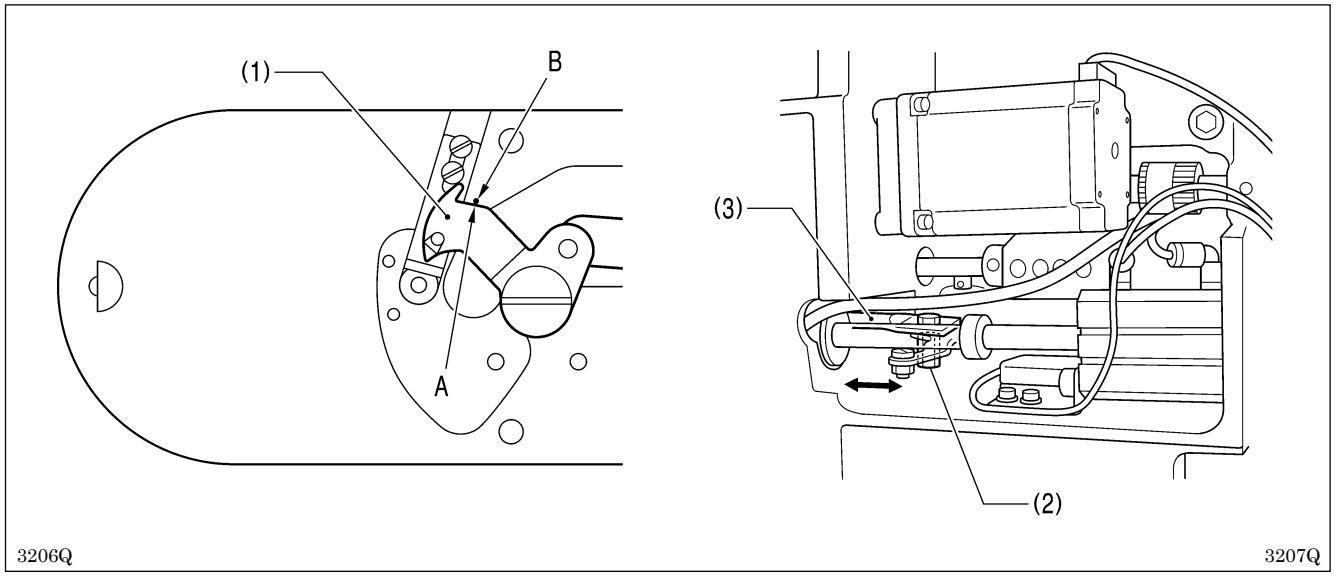

Loosen the nut (2) and move the connecting rod lever (3) to the left or right to adjust so that the V section A is aligned with the index mark B on the needle plate when the sewing machine in the stopped position and the movable knife (1) is pushed to the machine pulley side so that there is no play.

10-5-1. Replacing the movable knife and fixed knife

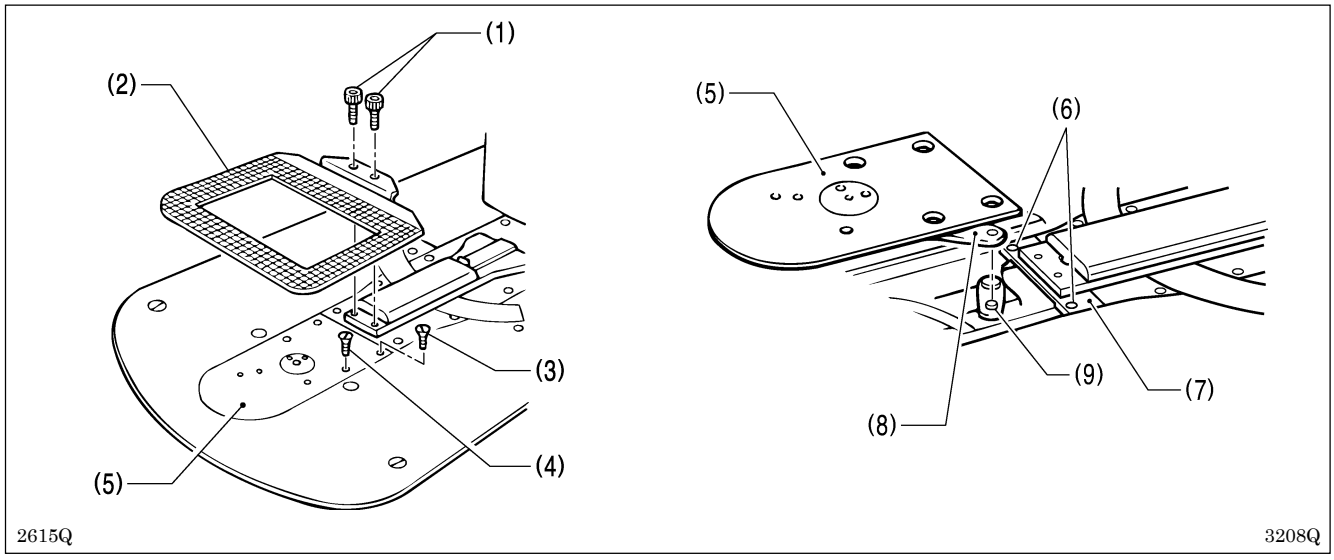

1. Open the large shuttle hook cover, remove the bolts (1) and the feed plate (2).
2. Remove the two screws (3) and the two screws (4), and then remove the needle plate (5).
3. Remove the two screws (6) and the feed bar guide plate FF (7).
4. Remove the thread trimmer connecting rod (8) from the connecting rod lever pin (9).

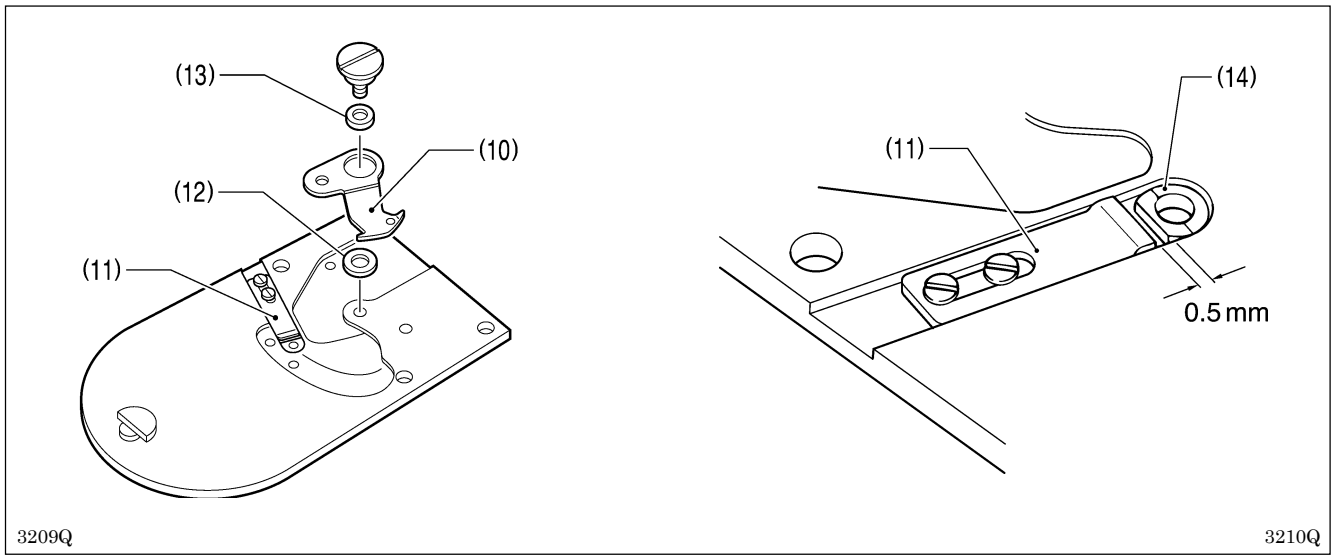

5. Remove the movable knife (10) and replace it with a new one. At this time, check that the movable knife (10) and the fixed knife (11) cut the thread cleanly. If necessary, adjust by using the apropriate movable knife washer (12) (supplied as accessories).
   * Apply grease to the outside of the collar (13) at this time.
6. Install the fixed knife (11) at a distance of 0.5 mm from the needle hole plate (14).
7. Place the thread trimming connecting rod (8) onto the connecting rod lever pin (9), and then install to the needle plate(5).

10-5-2. Adjusting the engagement of the movable knife and fixed knife

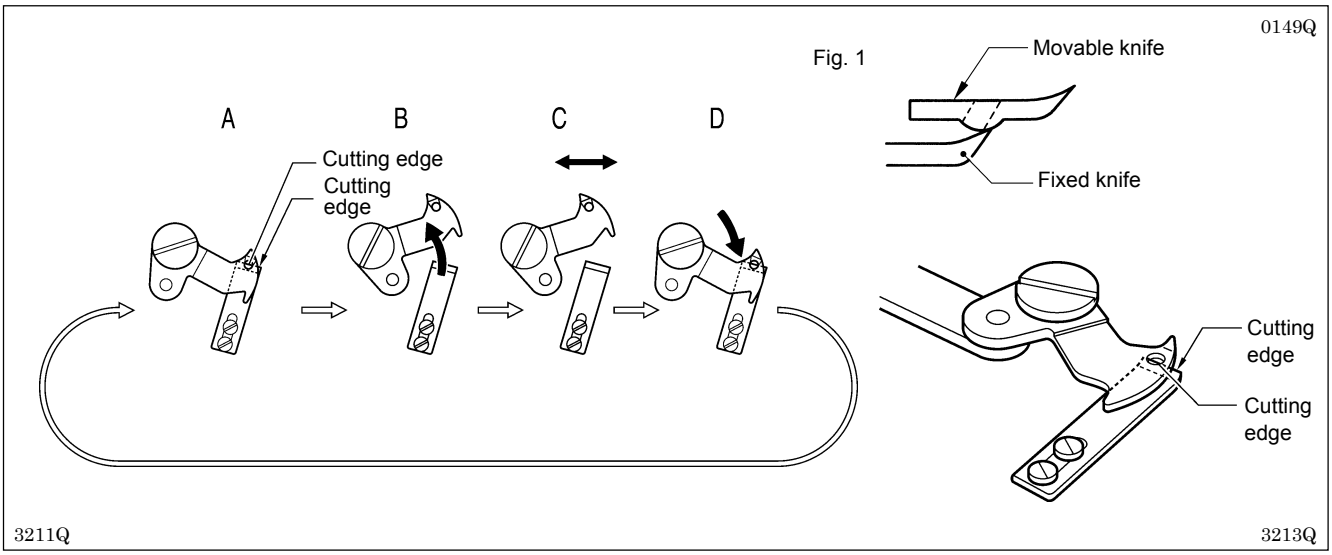

A. After the movable knife and fixed knife are properly engaged, tighten the screw as shown in Fig. 1.
B. Turn the movable knife (in the direction of the arrow) while the screw is still tightened.
C. Loosen the screw.
D. Turn the movable knife (in the direction of the arrow) while the screw is still loosened.
Repeat above steps A , B, C and D four or five times to maintain the cutting performance of the knife.

10-6. Adjusting the work clamp lift amount

The maximum work clamp lift amount is 25 mm from the top of the needle plate.
The lift amount is adjusted 17 mm at the time of shipment.

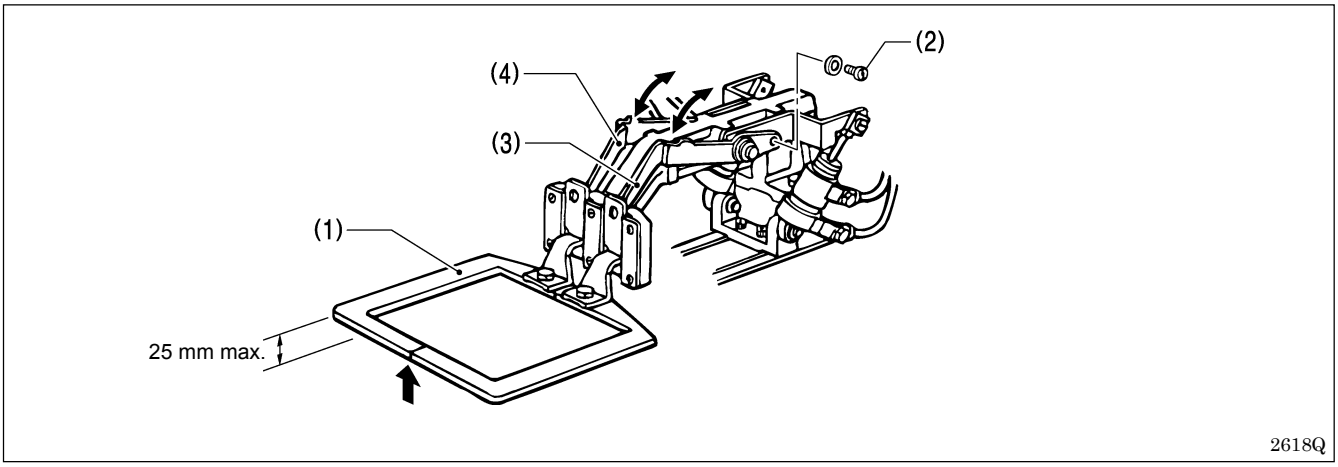

1. Raise the work clamp (1) and loosen the screws (2).
2. Adjust the work clamp lift by moving the presser levers (3) and (4) up and down and then tighten the screws (2).
   * If movement is sluggish when the work clamp (1) is being raised and lowered, it may not be possible to increase the work clamp (1) lift amount.
     Apply grease to the sliding part of the work clamp (1) (grease is already applied at the time of shipment), and check that the movement becomes easier.

10-7. Work clamp interchangeability

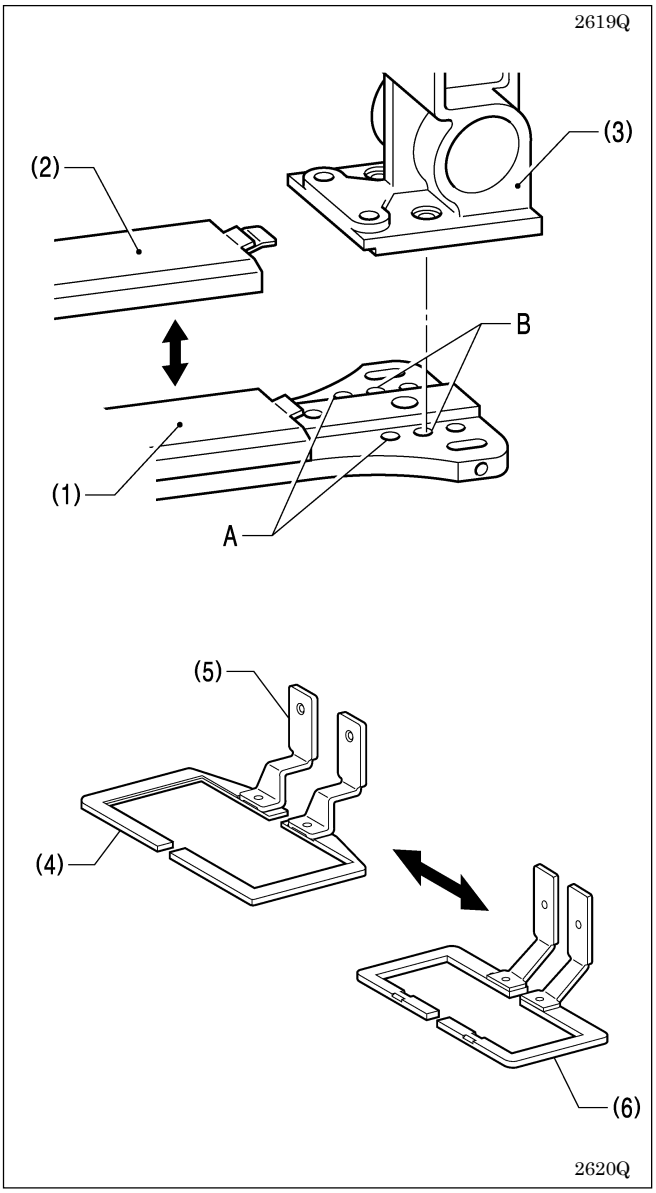

The BAS-311F work clamp can also be used with the KE-484C.
Replace the feed bar guide cover (1) with the feed bar guide cover assembly, LL (2) (optional).
Then, change the installation position for the presser arm assembly (3) from the standard installation position A to installation position B.

To use the BAS-311F work clamp and the KE-484C work clamp interchangeably
Use the optional work clamp 434EMK2 air (5) with the KE-484C work clamp.
It can then be used interchangeably with the BAS- 311F work clamp (6) at installation position B.

10-8. Adjusting the needle up stop position

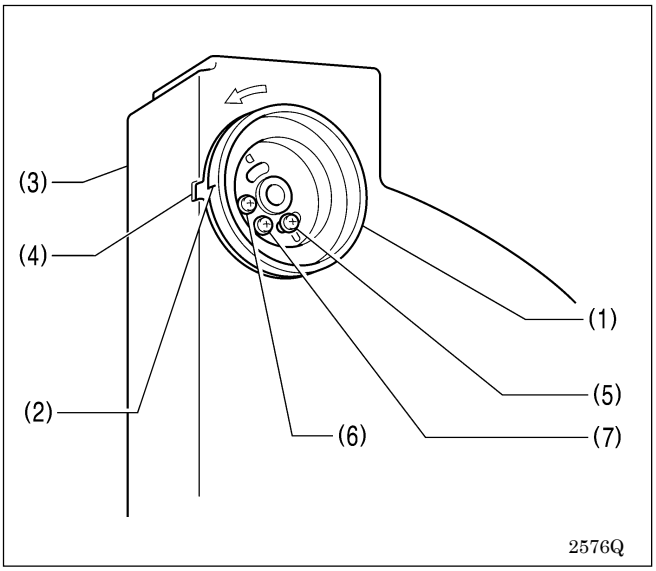

The needle up stop position is adjusted so that the index mark (2) on the machine pulley (1) is inside the mark (4) on the belt cover (3).
If adjustment is necessary, loosen the screw (5) at the “U” mark of the machine pulley (1) and adjust the position of the machine pulley (1). The machine pulley (1) stops later if it is turned clockwise, and it stops earlier if it is turned counter-clockwise.

Note:

The screw (6) at the “D” mark is an adjusting screw for the needle down detection function and is adjusted to match the feed timing, so it should not be loosened.
The screw (7) is a screw for detecting the machine stop position, and should not be loosened.

* If the index mark (2) is not inside the mark (4) when the sewing machine is started, error code “E-50” will be displayed. Turn the machine pulley to move the index mark (2) to the correct position and then start the sewing machine.

10-9. Adjusting the thread wiper

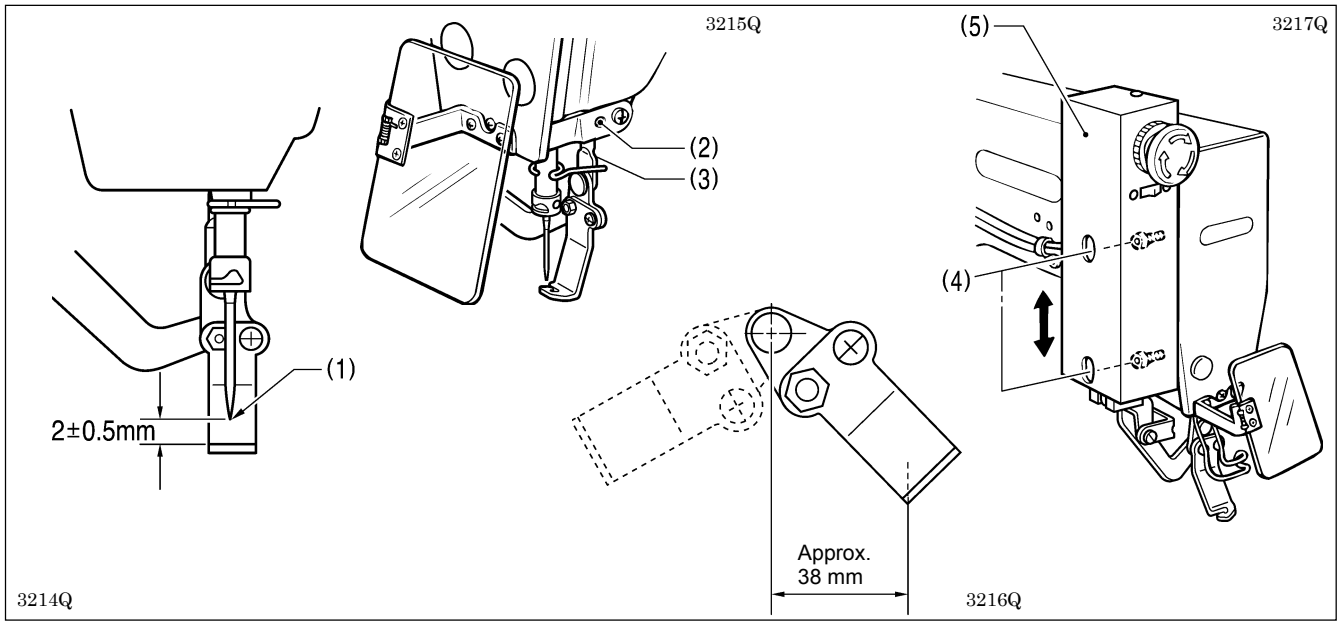

1. Loosen the set screw (2) and move the wiper arm support (3) up or down to adjust so that the clearance between the top of the thread wiper and the needle point (1) is 2 ± 0.5 mm when the thread wiper is aligned with the center of the needle.
   * Before carrying out this adjustment, check that the needle bar is lowered 3.5 to 4.0 mm from the needle up stop position when the sewing machine stops.
2. Loosen the two bolts (4) and move the wiper solenoid cover (5) up or down so that the thread wiper is approximately 38 mm from the needle when it is at the standby position.

10-10. Adjustment of air pressure

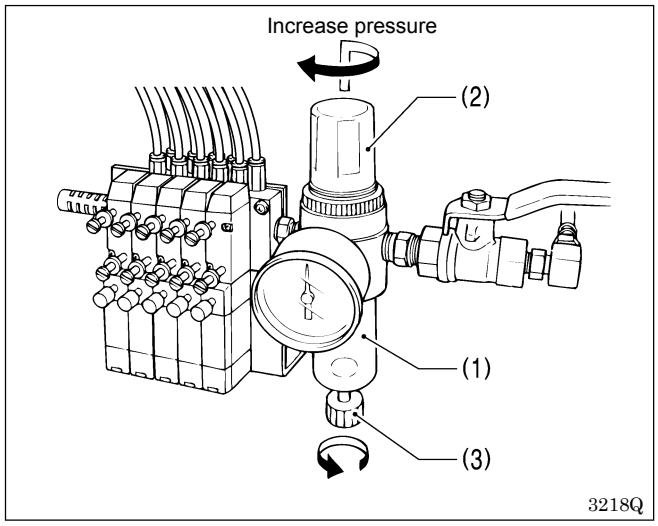

1. Air pressure should be 0.5 Mpa.
   The air pressure can be adjusted by pulling up and turning the control knob (2) on the integrator (1).
   After adjustment is complete, push the control knob (2) downward to lock it.
2. If water stands in the bottle of the integrator (1), turn the drain cock (3) in the direction indicated by an arrow to drain the water.

10-11. Checking the input sensor and DIP switch input

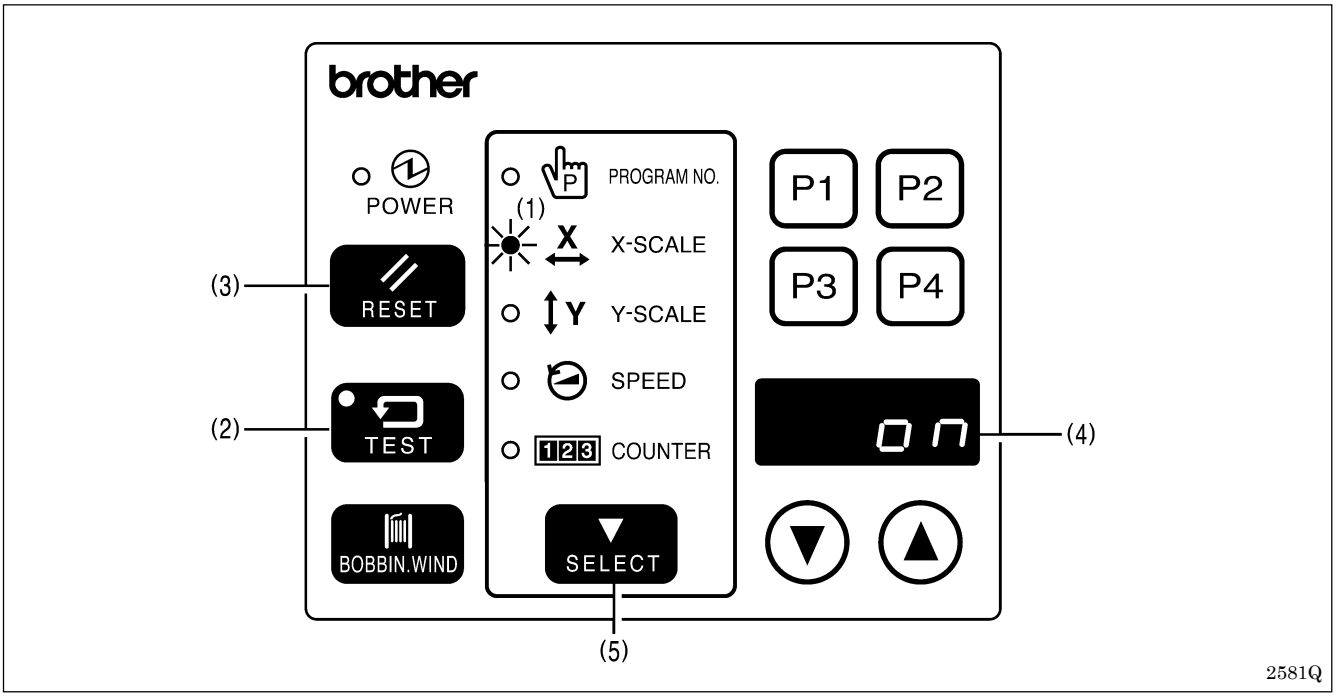

1. When the X-SCALE indicator (1) is illuminated and the RESET switch (3) is pressed while the TEST switch (2) is being pressed, the state of the X home position signal will appear on the display window (4).

• When sensor is ON

• When sensor is OFF

2. Each time the SELECT switch (5) is pressed, a different indicator will illuminate and the operating condition for the corresponding item will appear on the display window (4).
   - When X-SCALE indicator is illuminated..... X home position sensor (ON when home position detected)
   - When Y-SCALE indicator is illuminated..... Y home position sensor (ON when home position detected)
   - When SPEED indicator is illuminated..... Synchronizer (* 1)
   - When SPEED indicator and COUNTER indicator are illuminated ..... Thread trimmer sensor (ON when thread trimming)
   - When PROGRAM NO. indicator is illuminated..... Air wiper sensor (ON when wiper rises)..... Option

   *1 The synchronizer display simultaneously displays the needle up signal (3rd digit), the 24-section signal (2nd digit) and the needle down signal (1st digit).

   [H L L] "H" when the sensor is on, and "L" when the sensor is off
   - Needle down signal
   - 24-section signal
   - Needle up signal

   If the DIP switches at the side of the operation panel are changed at this time, the number of the DIP switch which was changed will be displayed in the 4th digit position of the display window (4) for about one second.

Note:
The DIP switch can be changed at this time without turning off the power so that you can check the DIP switch input. However, you should normally always turn off the power when changing DIP switch settings.

3. Press the TEST switch (2) again to return the display to the normal condition.

10-12. Checking the input voltage

2582Q

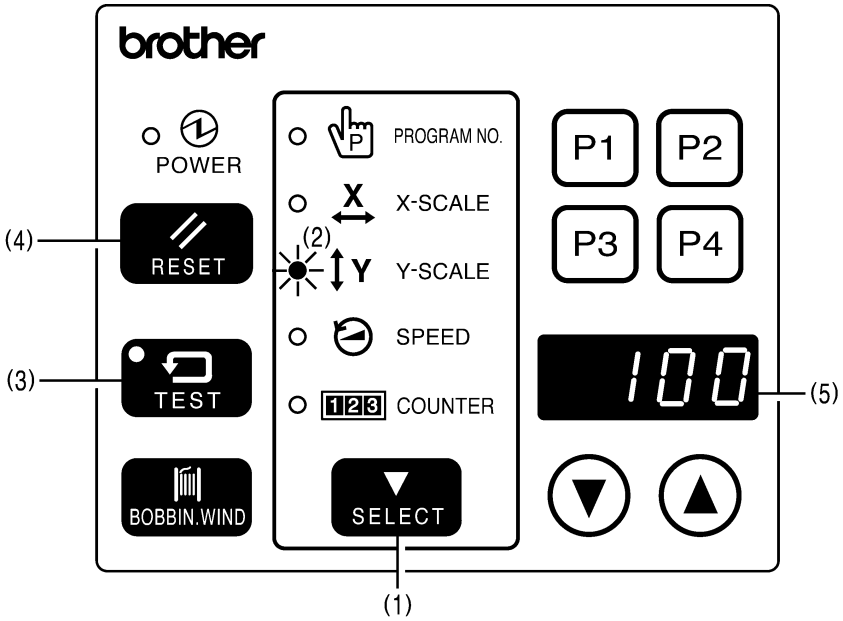

Specifications	Display	Notes
200V	[090 - 110]	“100” is displayed when the input voltage is 200 V.
220V	[100 - 120]	
230V	[105 - 125]	
100V 380V 400V 415V	[100 - 120]	“110” is displayed when the input voltage is 100V (for 100-V specs), 380V (for 380-V specs), 400V (for 400-V specs) or 415V (for 415-V specs).

1. Turn on the power switch.
2. Press the SELECT switch (1) until the Y-SCALE indicator (2) illuminates.
3. While pressing the TEST switch (3), press the RESET switch (4).
4. If the input voltage is normal, the input voltage conditions will be shown in the display window (5) as indicated in the table above.
5. Press the TEST switch (3) again to return the display to the normal condition.

10-13. Clearing all memory settings

If the sewing machine stops operating normally, the cause may be that an incorrect memory setting may have been made by means of the memory switch, for instance. In such cases, carry out the following procedure to clear the memory, and also check the DIP switch settings.
[Method]
While pressing the RESET switch, turn on the power. This will clear all of the memory setting.
Note:
This operation causes memory switches to be returned to their initial settings, and user program setting to be cleared.

10-14. Moving stitch patterns

- Programs which have already been programmed can be moved up, down and to the left and right.
  - * Once the power switch has been turned off, the amount of movement that has been stored in memory is reset. However, if memory switch memo-28 is set to ON, you can keep the amount of movement recorded in memory. (The amount of movement is retained in memory even when the power switch is turned off.)
  - * The amount of movement is reset when you change the program number.
- The feed position can be set to the any position desired.

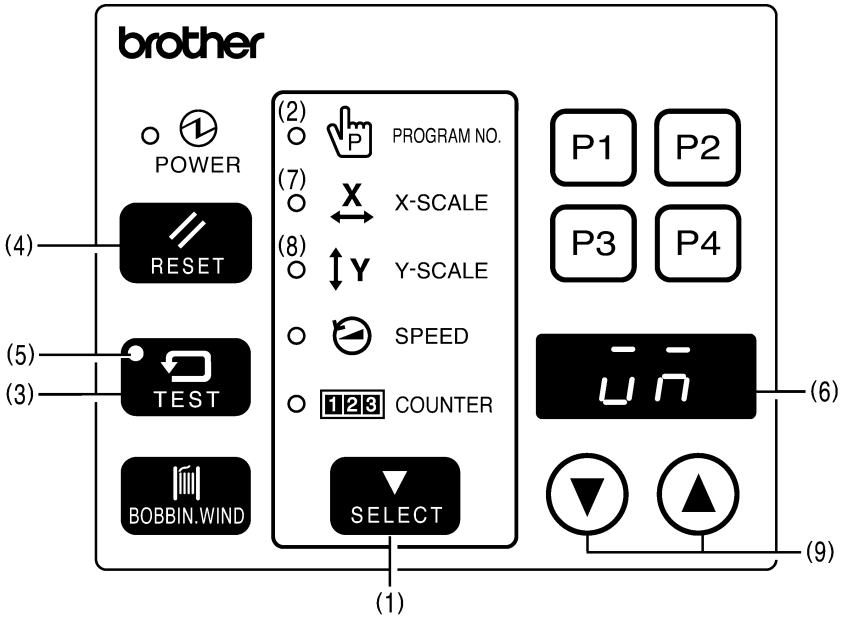

1. Select the program number, and then press the start switch once to move the feed mechanism to the sewing start position.
2. Press the SELECT switch (1) until the PROGRAM NO. indicator (2) illuminates.
3. While pressing the TEST switch (3), press the RESET switch (4).
   - * The TEST indicator (5) will illuminate and < un > will appear in the display window (6).
4. Press the SELECT switch (1) so that either the X-SCALE indicator (7) or Y-SCALE indicator (8) illuminates.
5. Press the DISPLAY SET switches (9) to move the feed mechanism one pulse at a time.
   - If the DISPLAY SET (▲) switch is pressed while the X-SCALE indicator is illuminated, the feed mechanism will move to the left.
   - If the DISPLAY SET (▼) switch is pressed while the X-SCALE indicator is illuminated, the feed mechanism will move to the right.
   - If the DISPLAY SET (▲) switch is pressed while the Y-SCALE indicator is illuminated, the feed mechanism will move down.
   - If the DISPLAY SET (▼) switch is pressed while the Y-SCALE indicator is illuminated, the feed mechanism will move up.
6. When the TEST switch (3) is pressed after the above fine adjustments have been made, the TEST indicator (5) and display window (6) will both switch off and movement of the stitch pattern will be completed.

   Note:

   When moving the stitch pattern, take the whole of the pattern area into consideration so that no parts extend outside the sewing area when the pattern is sewn.

   - * If you would like to set the feed position to a desired position, carry out steps 2. to 6. above while the display window (6) is flashing. The stitch pattern will not be moved at this time.

11. USING THE COUNTERS

11-1. Using the bobbin thread counter

If you use the bobbin thread counter to set the number of articles which can be sewn with the amount of bobbin thread available, you can stop the bobbin thread running out in the middle of sewing a pattern.

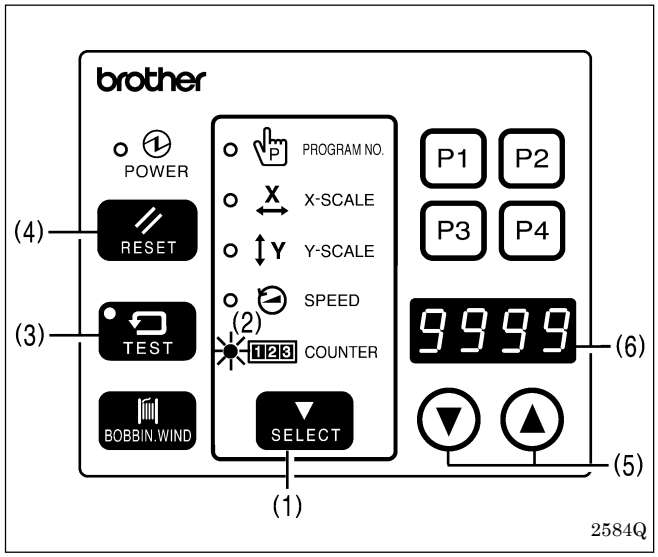

1. Press the SELECT switch (1) until the COUNTER indicator (2) illuminates.
2. While pressing the TEST switch (3), press the RESET switch (4).
   * The COUNTER indicator (2) will flash and the counter will switch to bobbin thread counter setting mode.
3. Press the DISPLAY SET switches (5) to set the number of articles to be sewn.
   - The bobbin thread counter can be set to sew a number of articles from one (“0001”) through to 9999 (“9999”). If the bobbin thread counter is set to “0000”, sewing is carried out without the number of articles sewn being counted.
   - If you press the RESET switch (4) while setting the bobbin thread counter, the setting will return to “0000”.
4. Press the TEST switch (3).
   * The number displayed in the display window (6) will then be stored as the bobbin thread counter setting.
5. Each time the sewing of a single article is completed, the number being displayed in the display window (6) will become smaller. When the number of articles set by the bobbin thread counter have all been sewn, “0000” will be displayed in the display window (6), and an alarm will start sounding continuously.
   * The sewing machine will not operate during this time, even if the foot switch is depressed.
6. Replace the bobbin, and then press the RESET switch (4).
   * The alarm will then stop sounding, and the number which was set in step 3. above will be re-displayed in the display window (6).

11-2. Using the production counter

The production counter can be displayed in the display window (6) separately from the bobbin thread counter.

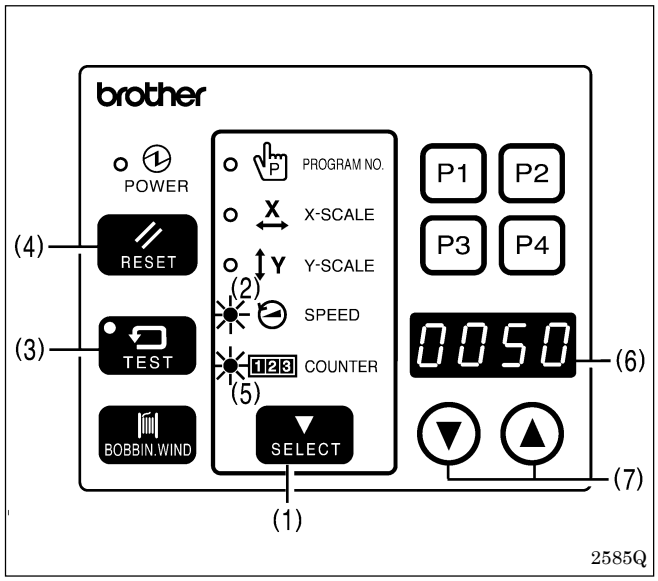

1. Press the SELECT switch (1) until the SPEED indicator (2) illuminates.
2. While pressing the TEST switch (3), press the RESET switch (4).
   * The COUNTER indicator (5) and the SPEED indicator (2) will illuminate, and the production counter will be displayed in the display window (6).
   - Press the RESET switch (4) to reset the production counter to “0000”.
   - You can also press the DISPLAY SET switches (7) to set the production counter to the desired value.
3. When the foot switch is depressed, the sewing machine will start sewing.
4. If you press the TEST switch (3) or the SELECT switch (1), the display will return to showing the bobbin thread counter.

12. CHANGING FUNCTIONS USING THE DIP SWITCHES

12-1. Operation panel DIP switches

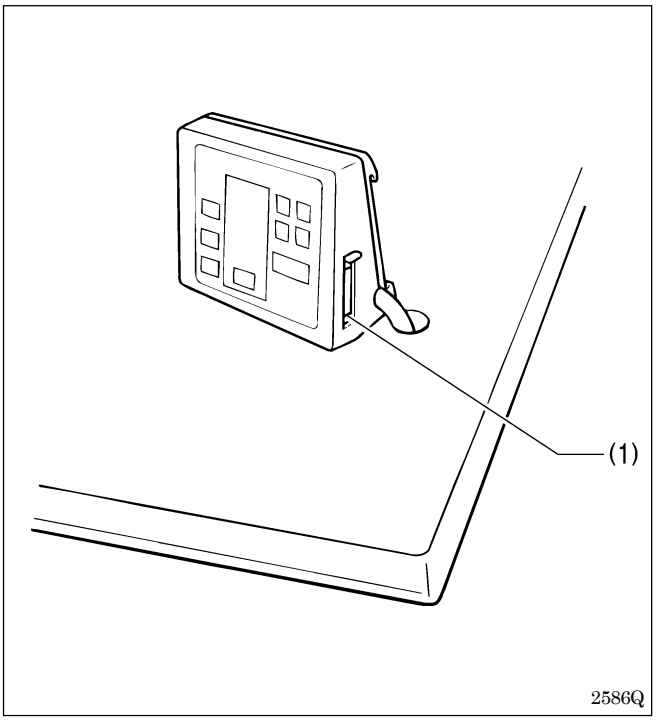

The functions shown in the table below can be changed by means of these DIP switches (1).
* All DIP switches are set to OFF at the time of shipment.

Note:
Always turn off the power before setting the DIP switches.

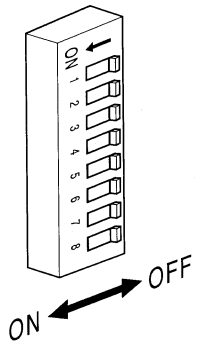

Switch	Motion when set to ON	
DIPA-1	Presser does not automatically lift after sewing is completed.	See “14. Setting the presser mode”
DIPA-2	Pedal mode is switched.	
DIPA-3	User program mode is available.	
DIPA-4	–	
DIPA-5	The presser does not rise automatically when a split is found.	
DIPA-6	Displays the enlargement/reduction ratio in millimeter units instead of as a percentage. (After changing this setting, be sure to carry out the auto-clear operation by referring to page 42.)	
DIPA-7	Enlargement of pattern size is not available.	
DIPA-8	Program number is fixed.	

12-2. DIP switches inside the control box

⚠ DANGER

Wait at least 5 minutes after turning off the power switch and disconnecting the power cord from the wall outlet before opening the face plate of the control box. Touching areas where high voltages are present can result in severe injury.

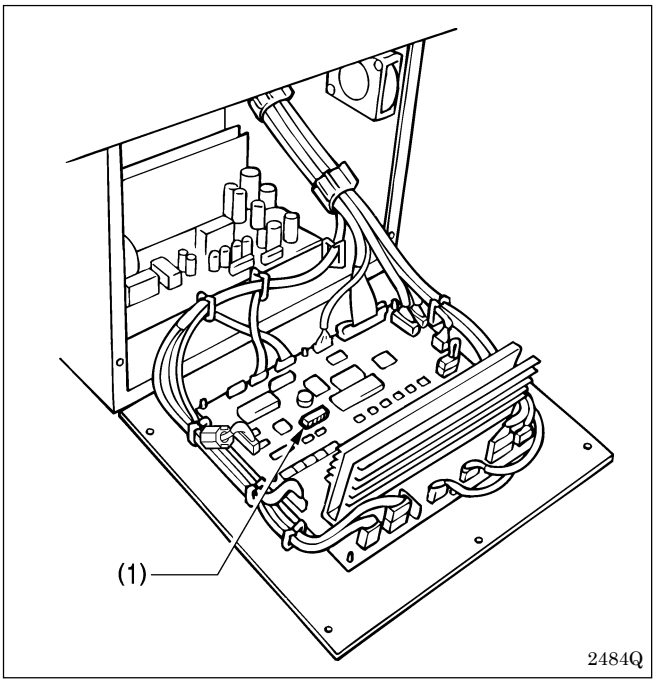

The functions can be changed as shown in the table below by changing the positions of the DIP switches (1).
* All DIP switches are set to OFF at the time of shipment.

Note:
When opening the cover, hold it securely so that it does not fall down.

Switch	Motion when set to ON
DIPB-1	First two stitches are sewn at a low speed of 260 rpm.
DIPB-2	Last two stitches are sewn at a low speed of 260 rpm.
DIPB-3	–
DIPB-4	Last two stitches are sewn at a low speed of 700 rpm.
DIPB-5	First two stitches are sewn at a low speed of 400 rpm.
DIPB-6	Low speed sewing is not performed at the start of sewing.
DIPB-7	The motor operates in reverse when the upper shaft stops, to return the needle bar to close to its highest position. *NOTE
DIPB-8	–

***Note:**
When the motor operates in reverse to raise the needle, the thread take-up will stop at a position which is lower than its normal stopping position. As a result, the thread take-up will rise slightly at the sewing start, and this may result in the thread pulling out under certain conditions.

12-3. Using user programs

User program...

It can store sixteen different programs which can include details such as the program number, X scale, Y scale and sewing speed. If you are sewing certain patterns over and over again, it is useful to record the settings for these patterns into a user program.

Recording a user program

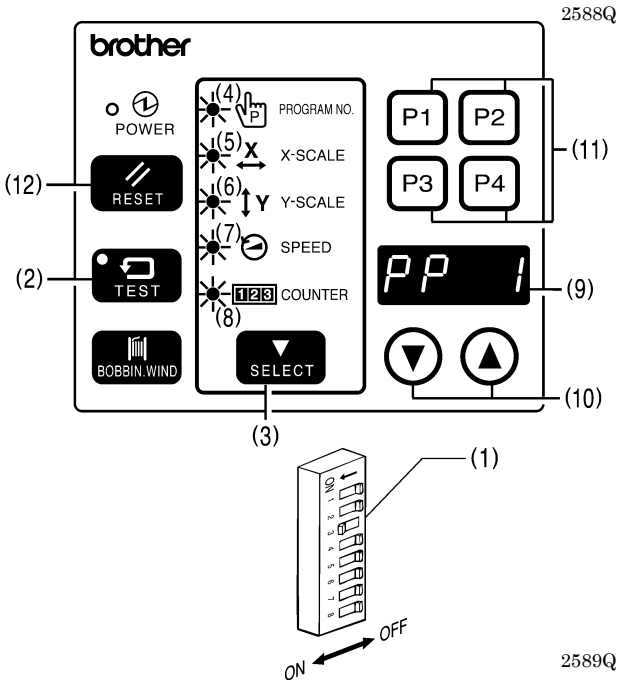

1. Turn off the power switch and then set DIP switch A-3 of the DIP switches (1) to ON.

▼

2. Turn on the power switch.
While pressing the TEST switch (2), press the SELECT switch (3).

* All of the menu indicators ((4) to (8)) will illuminate and the mode will switch to recording mode.
* In addition, "PP 1" will appear in the display window (9) to indicate that user program No.1 is being recorded. (Once recording of No.1 is completed, No.2 will be displayed; once No.2 is completed, No.3 will be displayed. Thus the next unrecorded program letter is always displayed.)

▼

3. Press the SELECT switch (3).

* The PROGRAM NO. indicator (4) will illuminate.

▼

4. Press the DISPLAY SET switches (10) to select the number for the program that you would like to record.

▼

5. Press the SELECT switch (3). * The X-SCALE indicator (5) will illuminate.

▼

6. Press the DISPLAY SET swithes (10) to select the X scale setting that you would like to record.

▼

7. Press the SELECT switch (3). * The Y-SCALE indicator (6) will illuminate.

▼

8. Press the DISPLAY SET switches (10) to select the Y scale setting that you would like to record.

▼

9. Press the SELECT switch (3). * The SPEED indicator (7) will illuminate.

▼

10. Press the DISPLAY SET switches (10) to select the speed setting that you would like to record.

▼

11. Press the SELECT switch (3). * This completes the recording of user program No.1.

* "PP 2" will then appear in the display window (9), to indicate that user program No.2 is now being recorded.
Repeat steps 3. through to 11. to record further programs as desired.

▼

12. Press the TEST switch (2). This completes the recording.

* The menu indicators ((4) to (8)) will all illuminate and "P1" will appear in the display to indicate that user program No.1 is currently selected.

Using a user program

1. Press the DISPLAY SET switches (10) to select the speed program number for the user program that you would like to use.
* The user program except P16 can also be selected using the user program switches (11). (See below.)

▼

2. Depress the work clamp switch to lower the work clamp, and depress the start switch.

▼

3. Check the sewing pattern (see P.24), and then sew the pattern selected.

* P1 to P4 can be selected using the P1 to P4 user program switches (11). P5 to P15 can be selected by pressing the P1 to P4 switches together in various combinations as shown below.

The switches with solid lines are valid switches for selection.

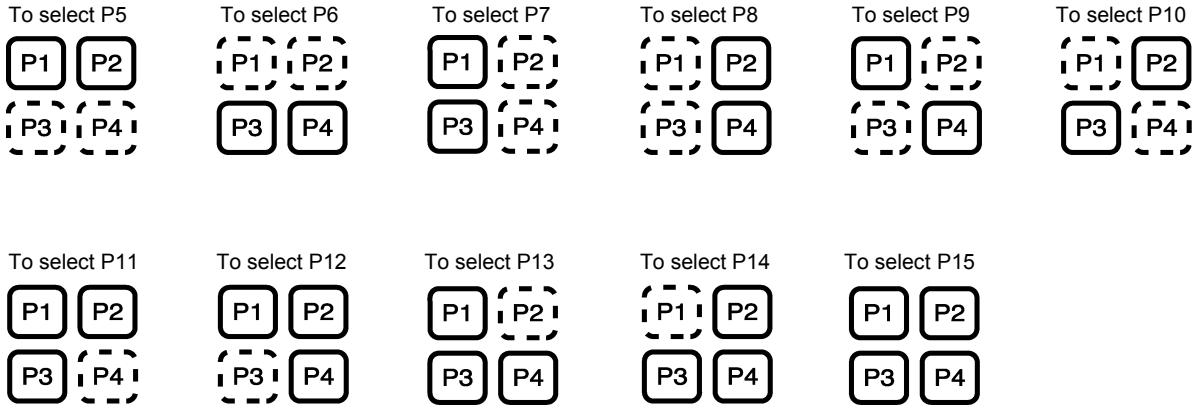

0472Q

Clearing the user programs

1. Switch the machine to recording mode by the procedure in steps 2. of recording a user program.

▼

2. Use the DISPLAY SET switches (10) to specify the user program number which is to be cleared of data.

▼

3. Press the RESET switch (12).
* The buzzer will sound and the user program with the number selected will be cleared.
* If you press and hold the RESET switch (12) until after the buzzer has sounded twice, all user programs will be cleared.
Note:
If data has been recorded in user programs P1, P2, P3 and P4 and you then clear the data in user program P2, the contents of P3 will be transferred to P2, and the contents of P4 will be transferred to P3.

13. CHANGING SPECIAL FUNCTIONS USING THE MEMORY SWITCHES

The functions of the switches on the operation panel (1) can be changed to carry out special functions.

Note:

After changing the memory switch settings, press the power switch to turn the power off and then back on again.

1. Turn on the power switch.
2. While pressing the TEST switch (2), press the BOBBIN. WIND switch (3).
   * "00 - - " will appear in the display window (4).
3. Press the DISPLAY SET switches (5) to set the two digits at the left of the display window (4) to the corresponding number (00 to 4F) of the function shown in the table below that you would like to select.
4. When the BOBBIN. WIND switch (3) is pressed, the two spaces at the right in the display window will change from " - - " to "ON".
   * If you press the RESET switch (6) at this time, memory switches will be returned to their initial settings (factory default settings).
5. Press the TEST switch (2).
   * The display will return to normal.

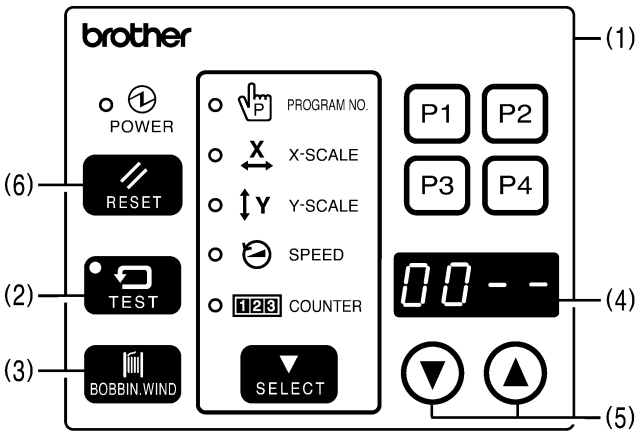

2590Q

<Memory switches 00 - 0F>

Switch	Motion when set to ON	Initial value
memo-00	At the end of sewing, the feed plate will be returned to the sewing start point via mechanical home position.	--
memo-01	Work clamp will move to the sewing start point, and then will be lifted.	ON
memo-02	Feed will move automatically to the next starting point at the same time as a user program is switched. (Normally it moves to the starting point after sewing starts.)	--
memo-03	When sewing using programs, the programs which have been set will be sewn in numerical order. (Cycle sewing mode is set.)	--
memo-04	The sewing speed will be fixed at the minimum speed for the maximum pitch of the sewing data. (Set this to ON if you are concerned that variations in pitch may cause changes in the sewing speed.)	--
memo-05	Increases the presser solenoid lifting force (Set to ON when using the optional spring for extra-heavy material)	--
memo-06	Enlargement and reduction ratio settings for X and Y become the same.	--
memo-07	–	--
memo-08	Test feeding is carried out stitch by stitch when the foot switch is depressed.	--
memo-09	The sewing start point becomes the reference point for enlargements and reductions. (The reference point for enlargements and reductions is normally the center of the sewing frame.)	--
memo-0A	–	--
memo-0b	–	--
memo-0c	Needle stops in up position during emergency stop.	--
memo-0d	The bar tacking stitches (with a pitch of less than 1 mm) are also enlarged and reduced. (Normally stitches with a pitch of less than 1 mm are not enlarged or reduced.)	--
memo-0E	Test feeding will be performed at the same speed as that for actual sewing. (This is used for checking feeding operation.)	--
memo-0F	After sewing is finished, the work clamp automatically opens and closes once (practice operation).	--

-- : OFF

<Memory switches 10 - 1F>

Switch	Motion when set to ON	Initial value
memo-10	–	--
memo-11	ON when a two-stage tensioner is used. (Special order device that outputs from option output No. 1) (Normally the tension opens when output is OFF, and the tension closes when option output No. 1 is ON)	--
memo-12	Pneumatic wiper can be used. (Outputs from option output No. 2)	ON
memo-13	–	--
memo-14	–	--
memo-15	–	--
memo-16	Needle cooler can be used. (available by special order).	--
memo-17	Thread take-up device is not operated at the sewing end.	--
memo-18	Thread take-up device operates one stitch before the sewing end.	--
memo-19	–	--
memo-1A	Needle up stop position errors are not detected.	--
memo-1b	Presser can be moved up and down before the home position is detected. (Normally the presser cannot be moved up and down until after the home position has been detected.)	--
memo-1c	–	--
memo-1d	For pneumatic specifications, the air pressure detection switch is enabled. (The air pressure sensor is a special-order option.)	--
memo-1E	Errors can be reset using the EMERGENCY STOP switch.	--
memo-1F	Thread is not trimmed when an emergency stop occurs during sewing.	--

-- : OFF

<Memory switches 20 - 2F>

Switch	Motion when set to ON	Initial value
memo-20	–	--
memo-21	Rotating-type thread breakage detector operates. (Device is available by special order.)	--
memo-22	During thread breakage detection, sensitivity is decreased from 8 to 14 stitches at the sewing start. (Sensitivity during sewing is three stitches.)	--
memo-23	When DIP switch A-8 is simultaneously ON, setting values changed using the operation panel are ignored.	--
memo-24	–	--
memo-25	–	--
memo-26	Enables the fiber-type thread breakage detector (when memo-21 is ON)	--
memo-27	–	--
memo-28	Stores the amount of parallel movement in memory. (Use the memory all clear operation to clear the setting.)	--
memo-29 - memo-2F	–	--

-- : OFF

<Memory switches 30 - 4F>
30 to 4F are set by entering two-digit values.
These values are incremented using the P2 switch, and decremented using the P4 switch.

Switch	Possible setting range	Units	Initial value	Explanation
memo-30	0 - 99	mm	99	Limits the maximum area in the horizontal direction (X). (If the value is set to 99, the maximum length allowed will be 100 mm)
memo-31	0 - 60	mm	60	Limits the maximum area in the vertical direction (Y).
memo-32	12 - 25	× 100rpm	25	Changes the maximum sewing speed.
memo-33	1 - 10	× 7.5°	5	Changes the feed timing. 1 (Fast) ← 5 (Standard) → 10 (Slow)
memo-34	0 - 5	Stitch	0	The (setting value + 1) number of stitches are sewn at the speed set by memo-35 at the sewing start. (No low-speed sewing if set to 0.)
memo-35	3 - 9	× 100rpm	4	Changes the sewing start speed for the number of stitches specified by memo-34.
memo-36	–	–	–	–
memo-37	1 - 20	× 7.5°	10	Changes the feed timing one stitch before the sewing end. 1 (Fast) ← 10 (Standard) → 20 (Slow)
memo-38	1 - 20	× 7.5°	10	Changes the feed timing two stitches before the sewing end.
memo-39	1 - 20	× 7.5°	10	Changes the feed timing for the third stitch at the sewing start.
memo-3A	1 - 20	× 7.5°	10	Changes the feed timing for the second stitch at the sewing start.
memo-3b	1 - 20	× 7.5°	10	Changes the feed timing for the first stitch at the sewing start.
memo-3c	0 - 99	Stitch	0	Sets the number of stitches for which the feed timing (memo-33 setting) is enabled. 0: Enabled for all stitches 1 - 99: Enabled for the specified number of stitches from the sewing start
memo-3d	–	–	–	–
memo-3E	–	–	–	–
memo-3F	–	–	–	–
memo-40	1 - 5	–	4	Changes the test feeding speed (with no material). 1 (Fast) ←→ 5 (Slow)
memo-41	–	–	–	–
memo-42	0 - 13	–	0	The work clamp operating mode can be changed. (When set to “0”, the mode is selected according to the settings for DIP switches A-1 and A-2.) Refer to “14. SETTING THE WORK CLAMP MODE” for details of the available modes.
memo-43	1 - 3	–	3	Changes the allowable speed/sewing pitch. 1 (Fast) ←→ 3 (Standard)
memo-44	0 - 3	–	0	Changes the path taken when moving from the machine home position to the start position. 0: Across inside of work clamp, 1: Top-left, 2: Bottom-left, 3: Bottom-right
memo-45 - memo-4c	–	–	–	–
memo-4d	0 - 10	× 100 ms	0	Changes the work clamp lift timing after sewing is finished.
memo-4E	2 - 9	× 7.5°	5	Tension release ON timing after thread trimming. 2 (Fast) ← 5 (Standard) →9 (Slow)
memo-4F	14 - 19	× 7.5°	14	Thread trimming timing 14 (Standard) ↔ 19 (Slow)

13-1. Using the cycle sewing function

What is the cycle sewing function?

The cycle sewing function lets you program up to four patterns for cycle sewing of patterns in a predeter mined order.

Recording a cycle sewing program

1. Set DIP switch (1)-3 to ON, and then record the patterns which you would like to use for cycle sewing. (Refer to "12-3. Using user programs".)
* Cycle sewing cannot be performed using patterns (P1 to P16) which have not had a user program assigned.

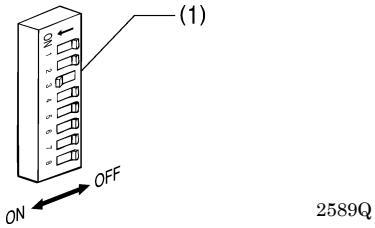

2. Set the memo-03 switch to ON. (Refer to page 55 for how to do this.)

3. While pressing the TEST switch (2), press the SELECT switch (3).
* All of the menu indicators ((4) to (8)) will illuminate and the mode will switch to recording mode.

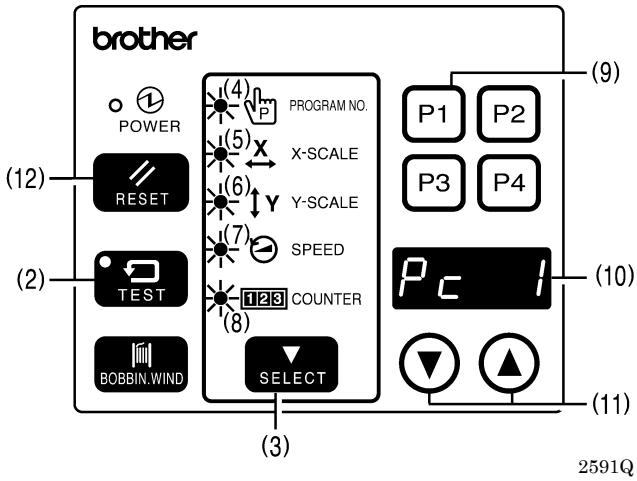

4. Press the P1 switch (9).
- **"Pc 1" will appear in the display window (10) to indicate that cycle sewing program No. 1 is being recorded.**
* Programs P2, P3 and P4 switches can also be used for programming.

5. Press the SELECT switch (3). *The PROGRAM No. indicator (4) will illuminate and "1- -" will appear in the display window (10).

6. Press the DISPLAY SET switches (11) to select the number for the user program that you would like to record.

7. Press the SELECT switch (3). *"2- -" will appear in the display window (10).

8. Press the DISPLAY SET switches (11) to select the number for the user program that you would like to record.

9. Repeat steps 5. and 6. to record all programs which you would like to include for cycle sewing.
* After "9- -" is displayed, "A- -", "b- -", "c- -", "d- -", "E- -" and "F- -" will be displayed in that order so that up to the 15th pattern can be recorded.
* If you would like to return to a previous number during the recording procedure, press the P1 switch so that "Pc 1" is displayed, and then return to step 4.

10. Press the TEST switch (2).
- This completes the setting of cycle sewing program No. 1.
* The menu indicators ((4) to (8)) will all illuminate and "c1-1" will appear in the display window (10) to indicate that the cycle sewing program No.1 is currently selected.

Using a cycle sewing program

1. When “c1-1” is flashing in the display window (10), depress the work clamp switch to lower the work clamp, and depress the start switch.

▼

2. Start sewing.

▼

3. “c1-1”, “c1-2”, “c1-3” are sewn in order for each article, and when the last-recorded pattern has been sewn, the display returns to “c1-1".

* If you press one of the DISPLAY SET switches (11) when “c1-*” is displayed, you can return to the previous stitch pattern or skip a stitch pattern.
* If you press the SELECT switch (3) when “c1-*” is displayed, you can check the contents of the recorded user program.

Clearing a cycle sewing program

1. Switch the machine to recording mode by the procedure in step 3. of recording a user program.

▼

2. Use one of the P* switches (user program switches) to specify which cycle sewing program to clear.

* Press the P1 switch (9) if you would like to clear cycle sewing program No. 1. (“Pc 1” will be displayed.)

▼

3. Press the RESET switch (12).

* The recorded contents of the specified cycle sewing program will then be cleared.
* If you press and hold the RESET switch (12) until after the buzzer has sounded twice, all cycle sewing programs will be cleared.

Note:

If you clear a user program after any cycle sewing programs have been recorded, all recorded cycle sewing programs will also be cleared.

14. SETTING THE WORK CLAMP MODE

Through the combination of DIP switches A-1 and A-2 on the operation panel, presser motions can be set as follows:
When memo-42 = 0 (initial value)

DIPA-1	DIPA-2	Pedal specifications	Raising the presser at the sewing end
–	ON	Single pedal	Presser is raised automatically.
ON	ON	Single pedal	Presser is raised by pressing the pedal.
–	–	Two pedals	Presser is raised automatically, then it is lowered by pressing the pedal. (factory default settings)
ON	–	Two pedals	Presser is kept lifted while the presser pedal is pressed.

Special memo-42 settings

memo-42	Pedal specifications	Raising the presser at the sewing end
5	Two pedals	Left presser drops when presser pedal is at the 1st step, and right presser drops when presser pedal is at the 2nd step. Raising is carried out in the reverse order. * Setting used when using the light work clamp function (Refer to “14-1. Light work clamp”.)
6	Two pedals	Right presser drops when presser pedal is at the 1st step, and left presser drops when presser pedal is at the 2nd step. Raising is carried out in the reverse order.
7	Two pedals	The left/right operating sequence changes alternately for each item sewn when using two-pedal operation. Starts with right → left.
8	Three pedals (Option)	The left pedal is used to raise and lower the left presser, and the right (center) pedal is used to raise and lower the right presser. The start (right) pedal is used to start sewing. Furthermore, when DIP switch A-2 is at ON, and if one presser is already lowered, pressing the start pedal causes the other presser to be lowered and then sewing starts.
9	Two pedals	When the presser pedal is depressed to the 1st step, both left and right pressers are raised simultaneously. When it is pressed to the 2nd step, sewing starts.
10	Two pedals	When the start pedal is depressed, both left and right pressers are lowered simultaneously. When the start pedal is released, sewing starts.
11	Three pedals (Option)	The left pedal raises and lowers the left and right work clamps, and the right pedal (center) detects the home position. The start (right) pedal is used to start sewing.
12	Three pedals (Option)	The left pedal raises and lowers the left work clamp, and the right pedal (center) detects the home position. When the start pedal (right side) is depressed for a short time (200 ms), the right work clamp is lowered, and when it is depressed for a longer time the right work clamp is lowered and then sewing starts.
13	Two pedals	Two-pedal operation raises and lowers the left and right work clamps simultaneously.

When memo-42 has been used to make a special setting, DIP switches A-1 and A-2 function as follows.
- When DIP switch A-1 is at ON, the pressers are not raised automatically at the sewing end.
- DIP switch A-2 is ignored except when memo-42 = 8.

14-1. Light work clamp

The hose connections can be changed so that the pressers are made to lower gently when the presser pedal is depressed to the 1st step, and firmly when the presser pedal is depressed to the 2nd step. This makes it easier to carry out position matching when attaching small articles such as labels.

[Memory switch setting]

Set memo-42 to 5 for two-pedal mode so that the pressers lower in the order of left then right for the standard hose connection. (Refer to “13. Changing special functions using the memory switches”.)

Hose connections for light work clamp operation by both pressers

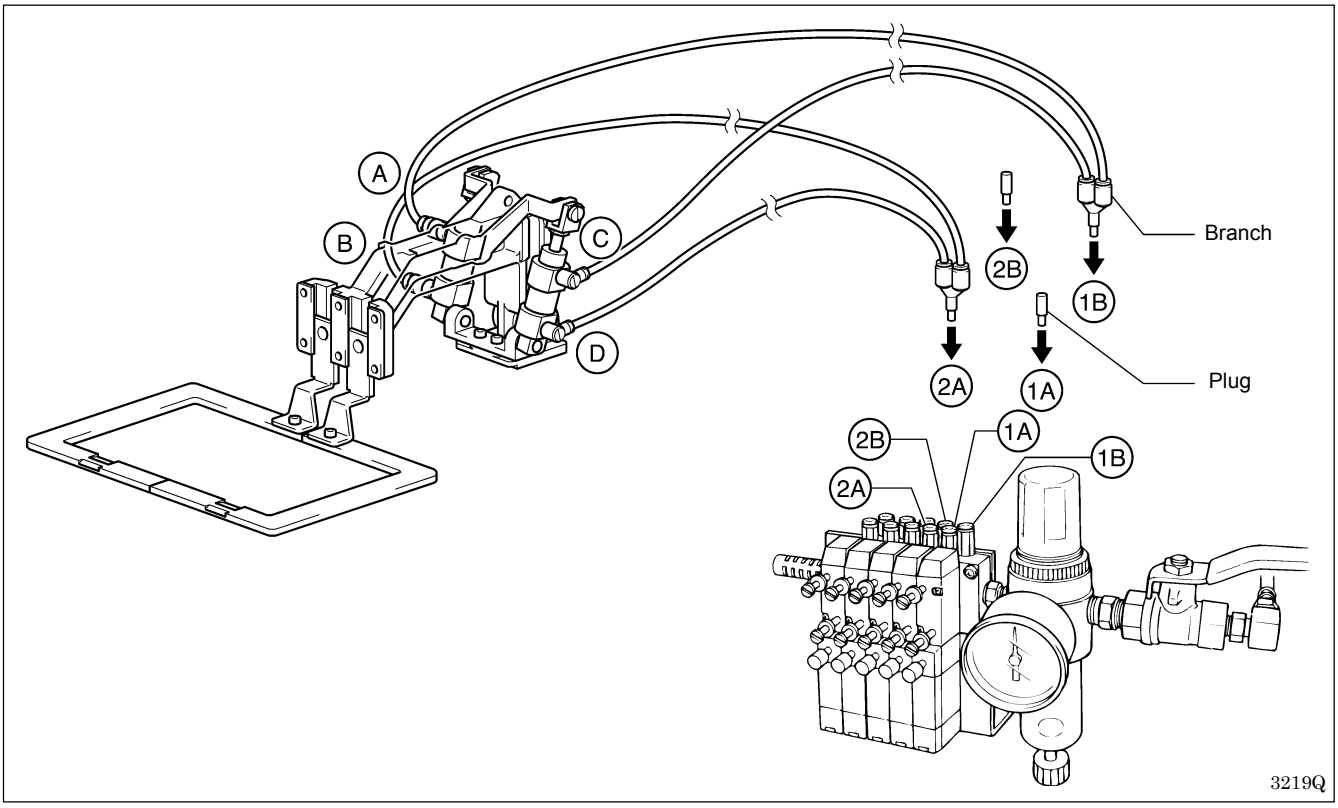

[How to use]

1. Depress the presser pedal to the 1st step to lower the pressers and apply a light pressure. You can then position small articles such as labels at this time.
2. After checking that everything is positioned correctly, depress the presser pedal to the 2nd step to firmly clamp the article being sewn.
3. Press the start pedal to start sewing.

Other hose connections and corresponding operations

The hoses can be connected in combinations other than the one shown above so that only one side of the presser operates in light work clamp mode.

Branch and plug connectors	Cylinder connectors				Operation when presser pedal is depressed to the 1st step
	A	B	C	D	
Branch: 1B, 2A Plug: 1A, 2B	1B	2A	1B	2A	Both pressers operate in light work clamp mode (example shown above)
Branch: 1B Plug: 2B	1B	2A	1B	1A	Only left presser lowers, and it lowers in light work clamp mode
Branch: 1B Plug: 2B	1B	1A	1B	2A	Only right presser lowers, and it lowers in light work clamp mode
Branch: 2A Plug: 1A	1B	2A	2B	2A	Both pressers lower, but only left presser lowers in light work clamp mode
Branch: 2A Plug: 1A	2B	2A	1B	2A	Both pressers lower, but only right presser lowers in light work clamp mode

15. TABLE OF ERROR CODES

⚠ DANGER

Wait at least 5 minutes after turning off the power switch and disconnecting the power cord from the wall outlet before opening the face plate of the control box. Touching areas where high voltages are present can result in severe injury.

If a malfunction should occur with the sewing machine, a buzzer will sound and an error code will appear in the display window. Follow the remedy procedure to eliminate the cause of the problem.

Code	Cause	Remedy
E-10	Emergency stop switch was pressed.	Turn the EMERGENCY STOP switch clockwise to release the lock, and then press the RESET switch to reset the error.
E-11	Emergency stop switch was pressed during sewing.	Turn the EMERGENCY STOP switch clockwise to release the lock, and then press the RESET switch to reset the error. You can then press the BOBBIN. WIND switch to repeat the sewing.
E-12	Emergency stop switch is being continually pressed, or emergency switch connection error.	Turn off the power and check.
E-13	Machine specification select connector is not connected properly.	Turn off the power and check if connectors P3 is disconnected.
E-17	The foot switch was pressed or the operation panel was used while the machine head was tilted back, or the machine head was tilted back while it was operating.	Turn off the power, and then return the machine head to its original position.
E-20	Problem with machine motor stopping, or synchronizer connection error. Or thermostat inside sewing machine motor has operated.	Turn off the power, and then turn the machine pulley to check if the machine has locked up. Check the synchronizer connection. Check if connectors P11, P12 and P13 are disconnected. Check that the correct combination of motor and PROM has been installed.
E-21	Machine motor operation error.	Turn off the power and check the ground wire connection.
E-30	Data is outside possible sewing area due to enlargement ratio setting.	Press the RESET switch, and then set the enlargement ratio again.
E-31	Stitch pattern data overlaps the sewing area when area limiting is active.	Press the RESET switch, and then reset the memory switches “30” and “31” or enlargement ratio.
E-32	The data format of the user program (% or mm) does not match the setting of DIP switch A-6.	After changing the setting of DIP switch A-6, clear all memory settings. (Refer to “10-13. Clearing all memory settings”.)
E-40	Length of a stitch exceeds 10 mm.	Press the RESET switch, and then set the enlargement ratio again.
E-41	Abnormality in the sewing data.	If programming a new sewing data, repeat the procedure from the beginning.
E-42	Invalid program number specified.	Press the RESET switch and specify a correct number.
E-50	Needle bar does not stop when the needle is raised.	Turn the pulley to align the index mark with the needle up stop position. (Refer to “10-8. Adjusting the needle up stop position”.)
E-66	Thread trimmer cylinder does not operate.	Turn off the power and check the cylinder.
E-67	Thread wiper cylinder does not operate.	Turn off the power, and then check if thread is tangled in the thread wiper.
E-70	Cooling fan does not operate.	Turn off the power, and then check if the cooling fan is blocked with scraps of thread.

15. TABLE OF ERROR CODES

Code	Cause	Remedy
E-80	Motor PROM is not correctly inserted.	Turn off the power and check.
E-81	Foot switch was depressed when the power was turned on.	Turn off the power and check.
E-82	An operation panel switch was depressed when the power was turned on.	Turn off the power and check the operation panel. Check that all panel cords are normal.
E-90	Abnormal drop in power supply voltage, or power was turned on again immediately after it was turned off.	Turn off the power and check the input voltage. After turning off the power, wait 3 seconds or more before turning it on again. (Refer to “10-12. Checking the input voltage”.)
E-91	Abnormal rise in power supply voltage.	Turn off the power and check the input voltage. (Refer to “10-12. Checking the input voltage”.)
E-A0	Home position cannot be detected (malfunction of home position sensor), or malfunction of power supply circuit board.	Turn off the power and check the connection of home position sensor connector P1.
E-b0	You tried to change the program number when DIP switch A-8 was set to ON.	Press the RESET switch. Set DIP switch A-8 to OFF before trying to change the program number.
E-b1	No sewing data available.	Replace the PROM with one which contains sewing data.
E-d0	Heat sink of control circuit board is abnormally hot.	Turn off the power and clean the air intake port of the box.
E-E0	Malfunction of EEPROM (malfunction of main circuit board).	Turn off the power, and turn it back on. If the error continually occurs, contact a qualified service technician.
E-E1	Corrupted EEPROM data, or main PROM version has been upgraded.	Press the RESET switch to reset the error. However, the data (memory switches, display and user programs) will be reset to the backup data or initialized.
E-E2	Corrupted EEPROM control information data.	Press the RESET switch to reset the error. However, the data (memory switches, display and user programs) will all be initialized.
E-F0	Solenoid or feed motor short-circuit (malfunction of main circuit board), or power relay is not operating (malfunction of power supply circuit board).	Turn off the power and contact a qualified service technician.
E-F1	Bad connection in cable between power supply circuit board and main circuit board.	Turn off the power and check if connectors P16 is disconnected.
E-F2	Abnormal current detected in power supply circuit board.	Turn off the power and contact a qualified service technician.

<Errors generated when optional equipment is connected>

Code	Cause	Remedy
E-14	Thread breakage detected.	Turn the EMERGENCY STOP switch clockwise to release the lock, and then press the RESET switch to reset the error. You can then press the BOBBIN. WIND switch to repeat the sewing.
E-15	Air pressure drop error.	Turn off the power and check. If drops in air pressure are not being detected, clear all memory settings and then set the memo-1d switch to OFF.

REFERENCE **segment LED alphabet**

8	Panel display	A	b	c	d	E	F	6	H	L	o
	Text display	A	b	c	d	E	F	6	H	L	O

16. TROUBLESHOOTING

⚠ CAUTION

Turn off the power switch and disconnect the power cord before carrying out troubleshooting, otherwise the machine will operate if the foot switch is depressed by mistake, which could result in injury.

Problem	Cause	Check	Remedy	Page
Work clamp does not rise.	Work clamp operation is sluggish.	Sliding part of the work clamp lubrication	Grease the sliding part of the work clamp.	38
	Work clamp lift amount is too great.	Distance between work clamp and top of needle plate	Adjust the height of the work clamp to within 25 mm.	38
	Work clamp is contacting thread wiper.	Thread wiper standby position	Adjust the position of the thread wiper.	40
Work clamp lift amount is incorrect.	Incorrect position of presser arm lever.	Distance between work clamp and top of needle plate.	Adjust the work clamp lift amount.	38
Thread wiper does not operate correctly.	The thread wiper is obstructing the needle.	Clearance between thread wiper and needle tip	Adjust the height of the thread wiper.	40
		Thread wiper position	Adjust the operating distance of the thread wiper.	40
	Thread wiper position is incorrect.	Thread wiper position	Adjust the operating distance of the thread wiper.	40
Lower thread winds to one side.	Bobbin winder thread tension stud height is incorrect.	Bobbin winder thread tension stud height	Adjust the height of the thread tension stud.	26
Lower thread winding amount is incorrect.	Bobbin presser position is incorrect.	Thread winding amount	Adjust the position of the bobbin presser.	26
Thread comes unthreaded.	Stitches being skipped at the sewing start.	Refer to “Skipped stitches occur”	Refer to “Skipped stitches occur”	59
	Uneven upper thread length.	Upper thread length	Adjust the sub-tension	28
	Upper thread is too short.	Thread take-up lever stroke	Adjust the thread take-up lever stroke.	35

Problem	Cause	Check	Remedy	Page
Upper thread breaks.	Upper thread tension is too strong.	Upper thread tension	Adjust the upper thread tension.	28
	Needle is installed incorrectly.	Needle direction	Install the needle correctly.	25
	Thread is too thick for the needle.	Thread and needle	Use the correct thread for the needle.	
	Thread take-up spring tension and height are incorrect.	Thread take-up spring tension and height	Adjust the tension and height of the thread take-up spring.	28, 29
	Damaged or burred rotary hook, needle hole plate or needle.	Damage or burring	File smooth or replace the affected part.	
	Thread melting (synthetic thread)	Thread edge	Use a thread cooling device.	
Lower thread breaks.	Lower thread tension is too strong.	Lower thread tension	Adjust the lower thread tension.	28
	Corners of needle hole plate is damaged.	Damage	File smooth or replace the needle hole plate.	
Skipped stitches occur.	Clearance between needle and rotary hook tip is too great.	Needle clearance	Adjust the needle clearance.	35
	Incorrect needle and rotary hook timing.	Needle bar lift amount	Adjust the needle bar lift amount.	34
	Upper thread is too short.	Thread take-up lever stroke	Adjust the thread take-up lever stroke.	35
	Needle is bent.	Bent needle	Replace the needle.	
	Needle is installed incorrectly.	Needle direction	Install the needle correctly.	25
Needle breaks.	Needle is touching the rotary hook.	Needle clearance	Adjust the needle clearance.	35
		Needle bar lift amount.	Adjust the needle bar lift amount.	34
	Needle is bent.	Bent needle	Replace the needle.	
	Needle is too thin.	Needle and thread	Use the correct needle for the material.	

Problem	Cause	Check	Remedy	Page
Upper thread is not trimmed.	Movable knife is blunt.	Movable knife blade	Replace the movable knife.	37
	Fixed knife is blunt.	Fixed knife blade	Sharpen or replace the fixed knife.	37
	Movable knife does not pick up the thread.	Needle bar lift amount	Adjust the needle bar lift amount.	34
	The movable knife does not pick up the thread because of skipped stitches at the sewing end.	Skipped stitches at sewing end	Refer to “Skipped stitches occur”.	59
	Movable knife position is incorrect.	Movable knife position	Adjust the position of the movable knife.	36
	Sub-tension is too weak.	Sub-tension	Turn the sub-tension nut to adjust the tension.	28
Thread jamming.	Thread take-up spring tension and height are incorrect.	Thread take-up spring tension and height	Adjust the tension and height of the thread take-up spring.	28, 29
	Incorrect needle and rotary hook timing.	Needle bar lift amount	Adjust the needle bar lift amount.	34
Poor seam finish on reverse side of material.	Upper thread is not properly tight.	Upper thread tension	Adjust the upper thread tension.	28
	Uneven upper thread length.	Upper thread length	Adjust the sub-tension.	28
	Upper thread is too long.	Thread take-up lever stroke	Adjust the thread take-up lever stroke.	35
Incorrect thread tightness.	Upper thread tension is too weak.	Upper thread tension	Adjust the upper thread tension.	28
	Lower thread tension is too weak.	Lower thread tension	Adjust the lower thread tension.	28
	Thread take-up spring tension and height are incorrect.	Thread take-up spring tension and height	Adjust the tension and height of the thread take-up spring.	28, 29
Machine does not operate when power is turned on and foot switch is depressed.	Head position switch does not work.	Head position switch cord connection	Check if the cord is disconnected.	9, 10
		Switching plate position	Adjust the position of the switching plate.	6
		Head position switch is broken.	Replace the head position switch.	

17. OPTIONAL PARTS

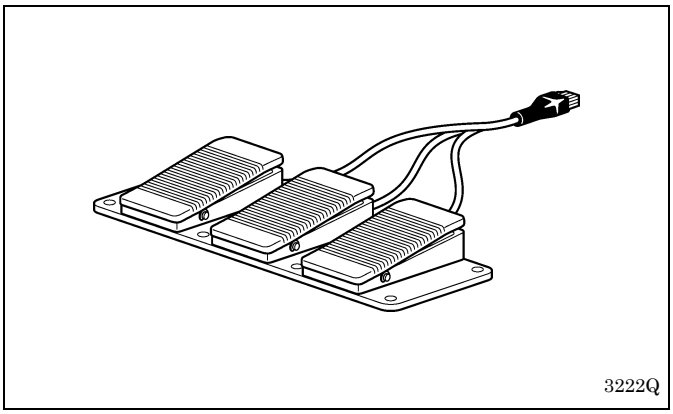

Three-pedal foot switch
The switch has an independent left work clamp switch (left side), right work clamp switch (center) and start switch (right side).

brother®

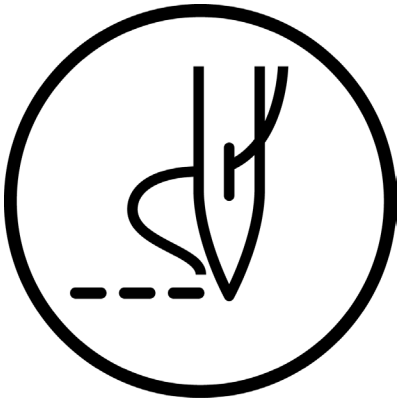

INSTRUCTION MANUAL

BROTHER INDUSTRIES, LTD.
15-1, Naeshiro-cho, Mizuho-ku, Nagoya 467-8561, Japan. Phone: 81-52-824-2177

Printed in Japan

118-B84
SA2032-001
2003.02.B(1)