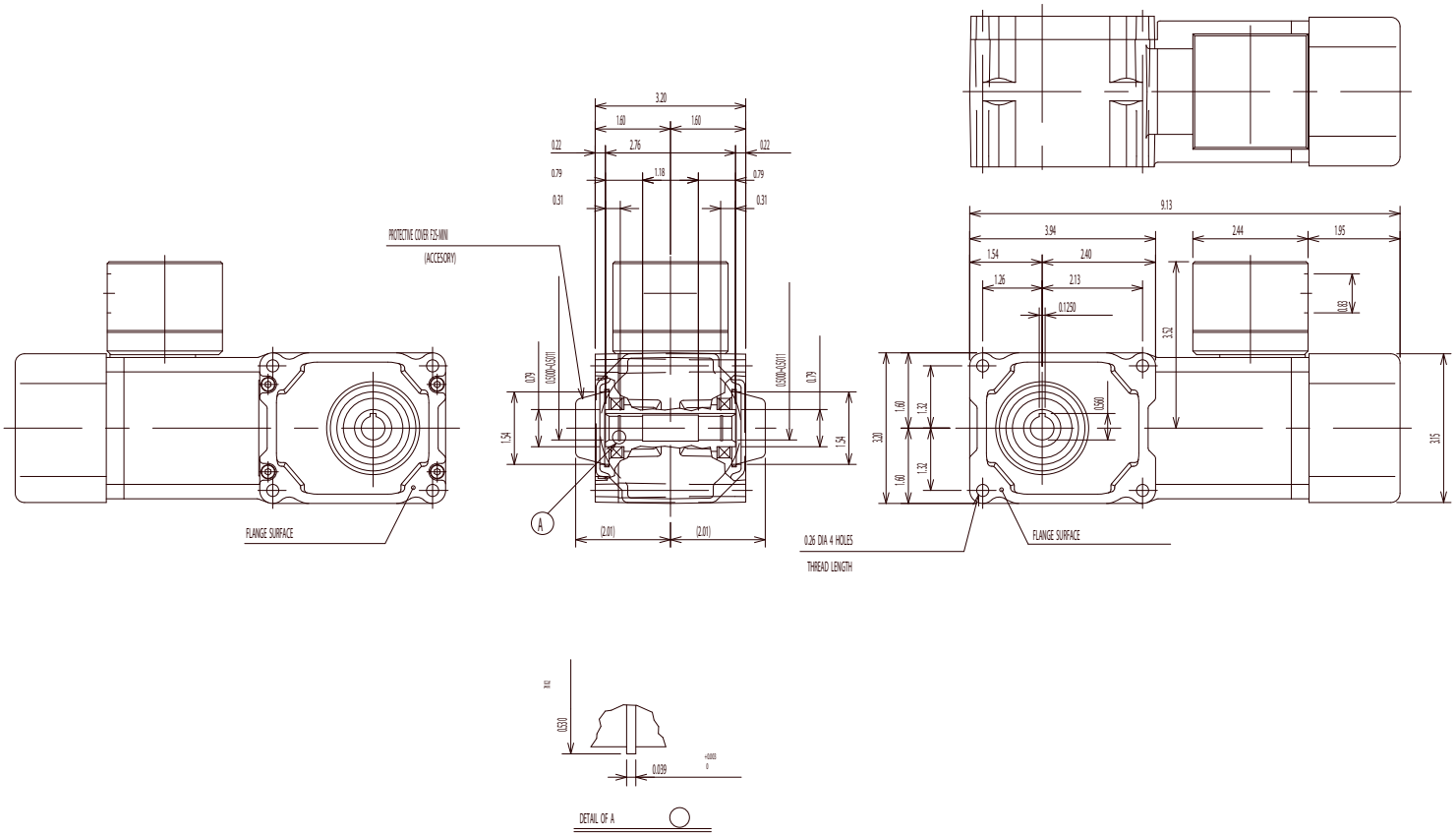
3.20
1.60
1.60
0.22
2.76
0.22
0.79
1.18
0.79
0.31
0.31
PROTECTIVE COVER F25-MINI
(ACCESORY)
0.79
(3.500)
0.79
(3.500)
1.54
1.54
A
(2.01)
(2.01)
FLANGE SURFACE
9.13
3.94
2.44
1.95
1.54
2.40
1.26
2.13
0.1250
0.63
3.52
1.60
1.32
(1.560)
3.20
1.60
1.32
3.15
0.26 DIA 4 HOLES
THREAD LENGTH
FLANGE SURFACE
TYP 12
(0.51)
0.039
+0.0003
0
DETAIL OF A