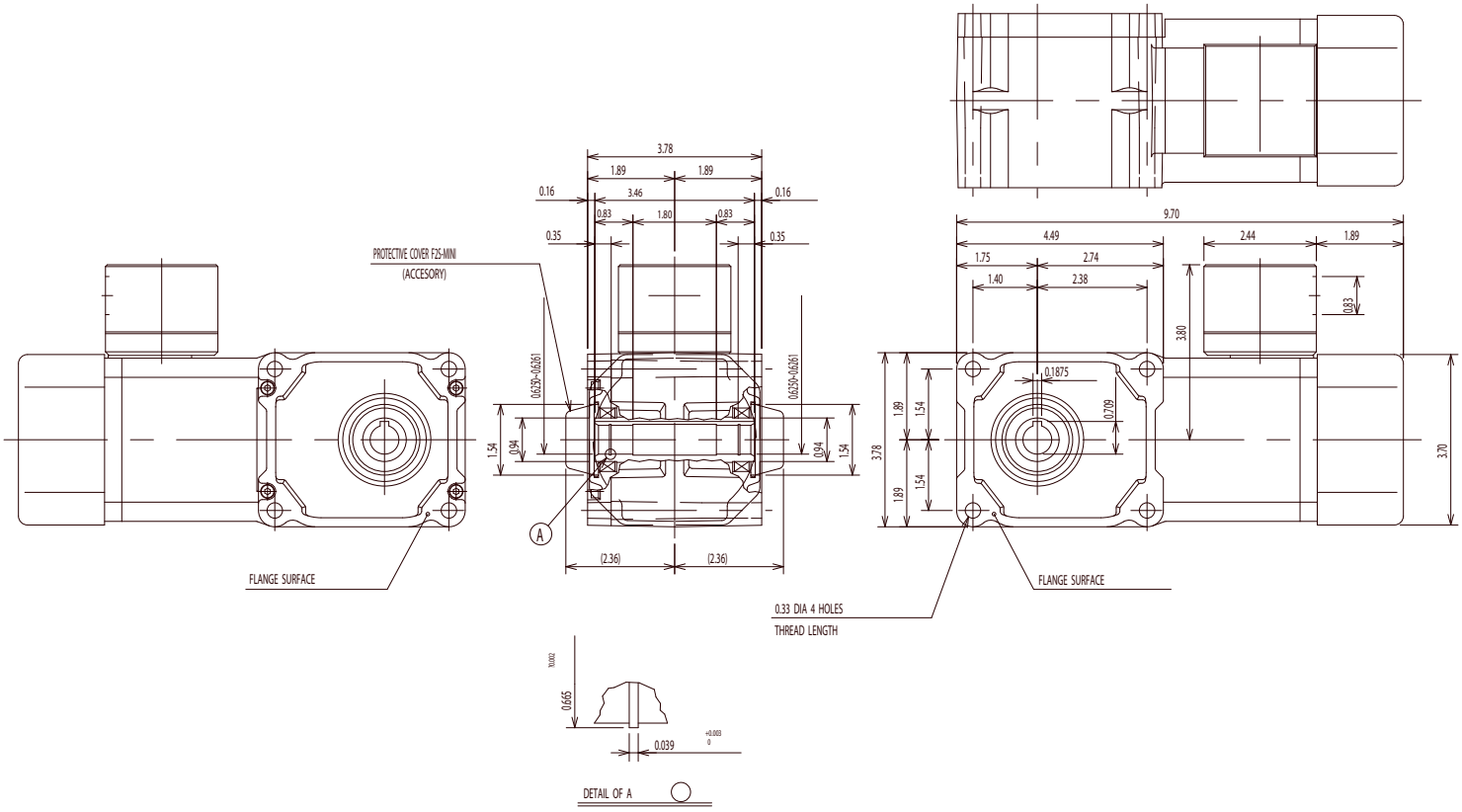
PROTECTIVE COVER F25-MINI
(ACCESORY)
FLANGE SURFACE
FLANGE SURFACE
0.33 DIA 4 HOLES
THREAD LENGTH
3.78
1.89
1.89
0.16
3.46
0.16
0.83
1.80
0.83
0.35
0.35
(06250-06261)
(06250-06261)
1.54
0.94
0.94
1.54
(2.36)
(2.36)
A
9.70
4.49
2.44
1.89
1.75
2.74
1.40
2.38
0.83
3.80
0.1875
0.709
1.89
1.54
1.54
1.89
3.78
3.70
10.002
0.665
0.039
+0.003
0
DETAIL OF A