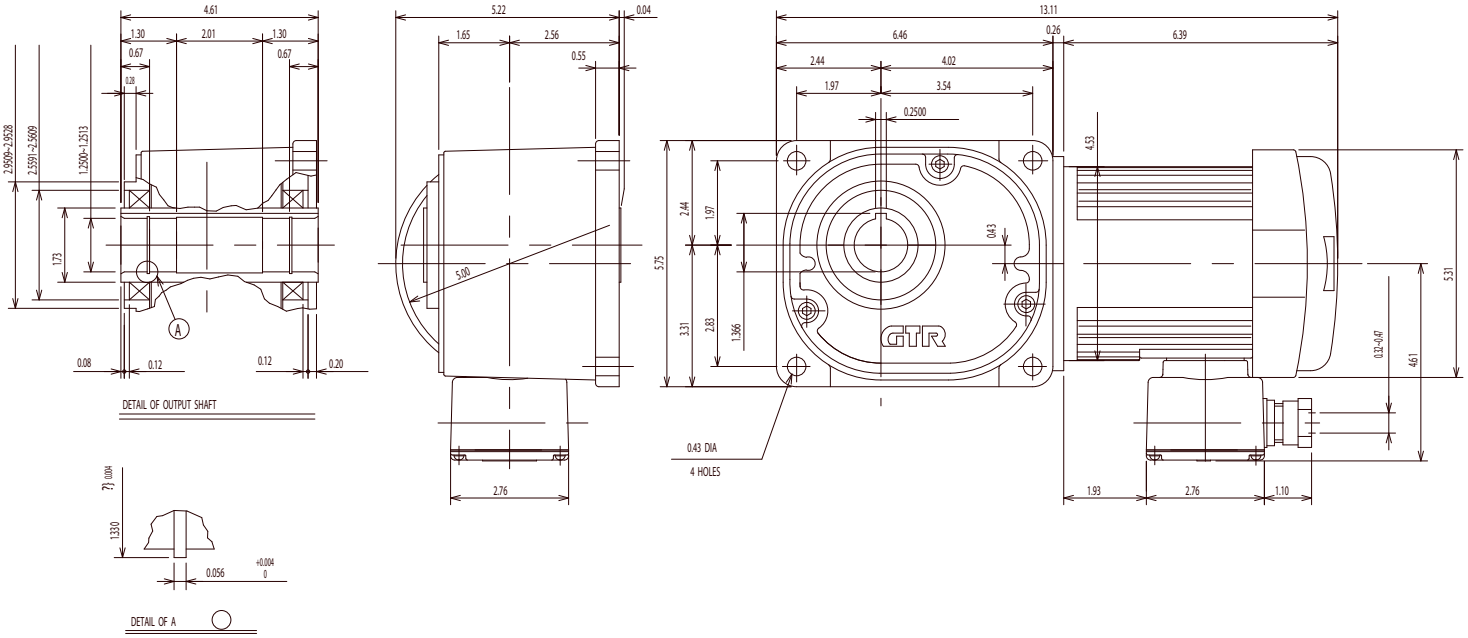
4.61
1.30
2.01
1.30
0.67
0.67
0.26
2.9509~2.9528
2.5591~2.5609
1.2500~1.2513
1.73
A
0.08
0.12
0.12
0.20
DETAIL OF OUTPUT SHAFT
7J 0.004
1.330
0.056
+0.004
0
DETAIL OF A
5.22
0.04
1.65
2.56
0.55
5.00
2.76
13.11
6.46
0.26
6.39
2.44
4.02
1.97
3.54
0.2500
4.53
2.44
1.97
5.75
3.31
2.83
1.366
0.43
GTR
0.43 DIA
4 HOLES
5.31
0.32~0.47
4.61
1.93
2.76
1.10