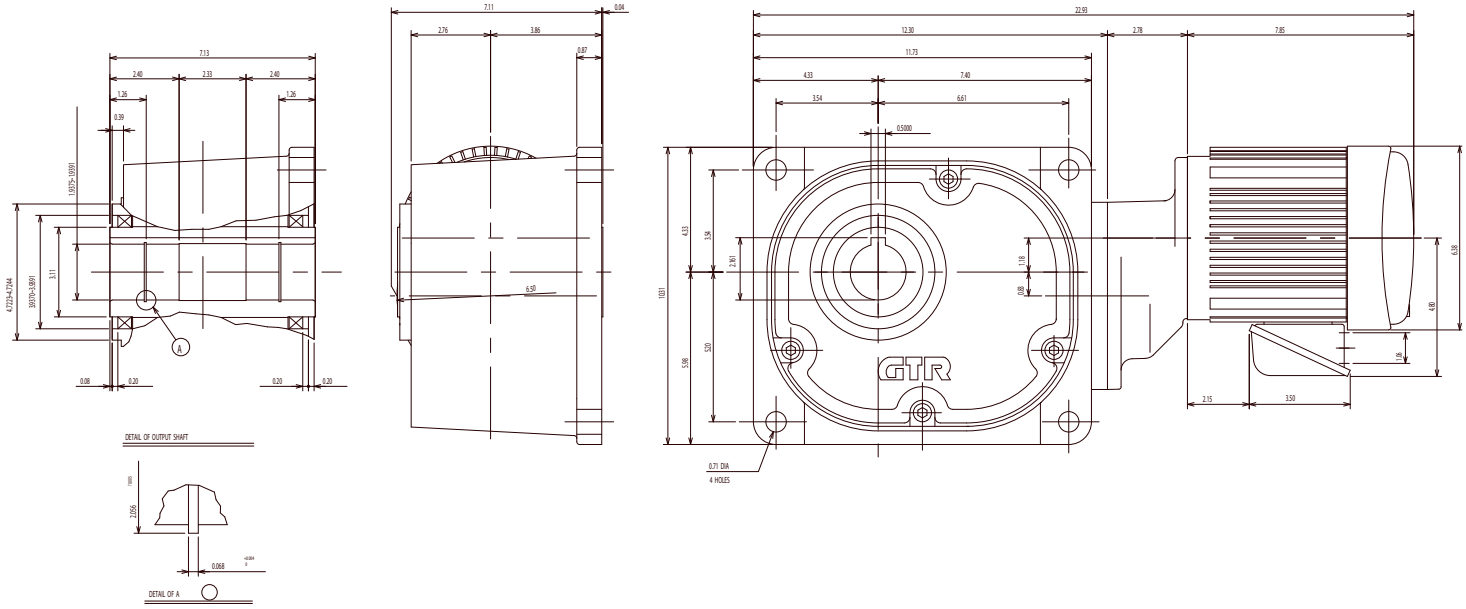
7.13
2.40
2.33
2.40
1.26
1.26
0.39
10.975–10.991
4.72124–4.7144
3.11
3.0170–3.0897
A
0.08
0.20
0.20
0.20
DETAIL OF OUTPUT SHAFT
1.000
2.0156
0.0688
+0.004
0
DETAIL OF A
7.11
0.04
2.76
3.86
0.87
6.50
22.93
12.30
2.78
7.85
11.73
4.33
7.40
3.54
6.61
0.5000
10.31
4.33
3.54
2.361
1.18
1.00
5.20
5.08
6.08
4.80
1.0
2.15
3.50
GTR
0.71 DIA
4 HOLES