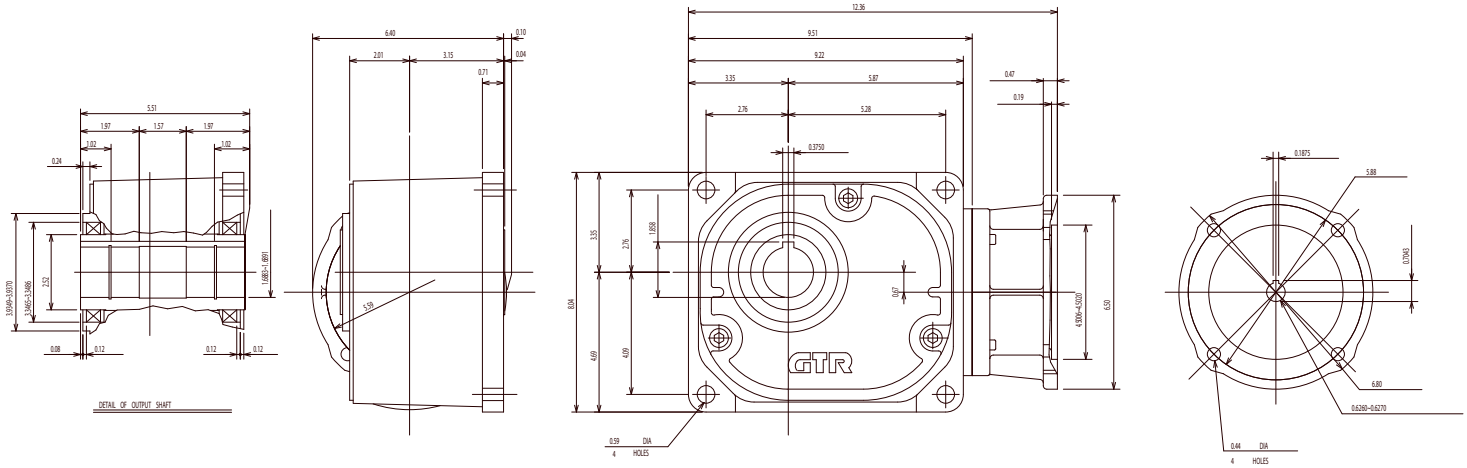
5.51
1.97
1.57
1.97
1.02
1.02
0.24
3.0948–3.0970
3.5405–3.5486
2.52
1.6835–1.6851
0.08
0.12
0.12
0.12
DETAIL OF OUTPUT SHAFT
6.40
2.01
3.15
0.10
0.04
0.71
5.59
12.36
9.51
9.22
3.35
5.87
2.76
5.28
0.47
0.19
0.3750
3.35
2.76
1.888
8.04
4.69
4.09
0.07
4.3006–4.3007
6.50
0.59 DIA
4 HOLES
0.1875
5.88
0.7065
6.80
0.6260–0.6270
0.44 DIA
4 HOLES