brother®

Brother Laser Printer

SERVICE MANUAL

MODEL:
HL-2140/2150N/2170W

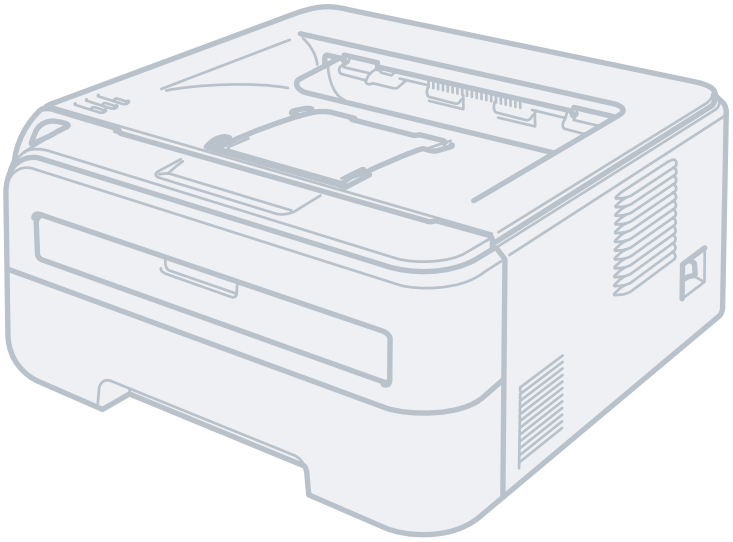

Read this manual thoroughly before maintenance work.
Keep this manual in a convenient place for quick and easy reference at all times.

Sep 2007
SM-PRN066
84UA0*
(5)

Confidential

© Copyright Brother Industries, Ltd. 2007

Compilation and Publication:

This manual has been complied and published, under the supervision of Brother Industries Ltd., covering the latest product descriptions and specifications. The contents of this manual and the specifications of this product are subject to change without notice. Brother reserves the right to make changes without notice in the specifications and materials contained herein and shall not be responsible for any damages (including consequential) caused by reliance on the materials presented, including but not limited to typographical and other errors relating to the publication. This product is designed for use in a professional environment.

PREFACE

This service manual contains basic information required for after-sales service of the laser printer (hereinafter referred to as "the machine"). This information is vital to the service personnel to maintain the high printing quality and performance of the machine.

This service manual covers the **HL-2140/2150N/2170W machines**.

This manual consists of the following chapters:

CHAPTER 1: TROUBLESHOOTING

Details of error messages and codes that the incorporated self-diagnostic function of the machine will display if any error or malfunction occurs. If any error message appears, refer to this chapter to find which parts should be checked or replaced.

The latter half of this chapter provides sample problems that could occur in the main sections of the machine and related troubleshooting procedures.

CHAPTER 2: PERIODICAL MAINTENANCE

Details of consumable parts and periodical maintenance parts. This chapter also covers procedures for disassembling and assembling periodical maintenance parts.

CHAPTER 3: DISASSEMBLY AND ASSEMBLY

Details of procedures for disassembling and assembling of the machine together with related notes. The disassembly order flow provided enables you to see at a glance the quickest way to get to parts involved.

At the start of a disassembly job, you can check the disassembly order flow that guides you through a shortcut to get to the object parts.

This chapter also covers screw tightening torques and lubrication points to which the specified lubrications should be applied during assembly jobs.

CHAPTER 4: ADJUSTMENTS AND UPDATING OF SETTINGS, REQUIRED AFTER PARTS REPLACEMENT

Details of adjustments and updating of settings, which are required if the main PCB and some other parts have been replaced. This chapter also covers how to update the firmware.

CHAPTER 5: SERVICE SUPPORT SOFTWARE

Describes the maintenance mode which is exclusively designed for the purpose of checking the settings and adjustments using the keys on the panel.

This chapter also covers hidden function menus, which activate settings and functions or reset the parts life.

CHAPTER 6: CIRCUIT DIAGRAMS, WIRING DIAGRAM

Provides the Circuit Diagrams and Wiring Diagram for the connections of the PCBs.

Confidential

APPENDIX 1: SERIAL NUMBERING SYSTEM

APPENDIX 2: SCREW CATALOGUE

APPENDIX 3: DELETION OF PERSONAL INFORMATION

APPENDIX 4: REFERENCES

APPENDIX 5: GLOSSARY

Information in this manual is subject to change due to improvement or redesign of the product. All relevant information in such cases will be supplied in service information bulletins (Technical Information).

A thorough understanding of this machine, based on information in this service manual and service information bulletins, is required for maintaining its print quality performance and for improving the practical ability to find the cause of problems.

There is the service reference manual as well. This service reference manual contains “SPECIFICATIONS”, “THEORY OF OPERATION”, “TONER CARTRIDGE WEIGHT INFORMATION”, “REFERENCES”, and “GLOSSARY”.

TABLE OF CONTENTS

REGULATION vii

SAFETY INFORMATION xi

CHAPTER 1 TROUBLESHOOTING 1-1

1. INTRODUCTION 1-1
   - 1.1 Precautions 1-1
   - 1.2 Part names 1-2
   - 1.3 Initial Check 1-3
2. DISTINGUISH ERROR CAUSE 1-5
   - 2.1 LED indication 1-5
     - 2.1.1 LED indication at Operator Calls 1-5
     - 2.1.2 LED indication at Service Calls 1-7
   - 2.2 Message indication 1-8
     - 2.2.1 Error indication at Service Calls 1-8
   - 2.3 Error Cause and Remedy 1-9
3. PAPER FEEDING PROBLEMS 1-18
   - 3.1 No Feeding 1-18
   - 3.2 Double Feeding 1-18
   - 3.3 Paper Jam 1-19
   - 3.4 Dirt on Paper 1-20
   - 3.5 Wrinkles or creases 1-20
   - 3.6 Waves in the paper / folds in the paper at the eject roller 2 1-20
   - 3.7 Curl in the paper 1-21
4. IMAGE DEFECT TROUBLESHOOTING 1-22
   - 4.1 Image Defect Examples 1-22
   - 4.2 Diameter of Rollers 1-22
   - 4.3 Troubleshooting Image Defect 1-23
5. SOFTWARE SETTING PROBLEMS 1-36
6. NETWORK PROBLEMS 1-37
7. OTHERS PROBLEMS 1-38

CHAPTER 2 PERIODICAL MAINTENANCE 2-1

1. CONSUMABLE PARTS 2-1
2. PERIODICAL PEPLACEMENT PARTS 2-2

CHAPTER 3 DISASSEMBLY AND ASSEMBLY 3-1

1. SAFETY PRECAUTIONS 3-1
2. PACKING 3-2
3. SCREW TORQUE LIST 3-3
4. LUBRICATION 3-5
5. OVERVIEW OF GEARS 3-6
6. HARNESS ROUTING 3-7
7. DISASSEMBLY FLOW 3-11
8. DISASSEMBLY PROCEDURE 3-12
   - 8.1 PAPER TRAY UNIT / SEPARATION PAD ASSY 3-12
   - 8.2 FRONT COVER ASSY / SW KEY 3-13
     - 8.2.1 FRONT COVER ASSY 3-13
     - 8.2.2 SW KEY 3-15
   - 8.3 BACK COVER / OUTER CHUTE ASSY 3-17
     - 8.3.1 BACK COVER 3-17
     - 8.3.2 OUTER CHUTE ASSY 3-18
   - 8.4 FUSER COVER ASSY 3-19
     - 8.4.1 FUSER COVER ASSY 3-19
     - 8.4.2 EJECT ACTUATOR / EJECT ACTUATOR SPRING 3-20
     - 8.4.3 EJECT ROLLER ASSY 1 / BUSH C / BUSH R / BUSH L 3-21
   - 8.5 INNER CHUTE ASSY 3-22
   - 8.6 FUSER UNIT 3-23
   - 8.7 SIDE COVER R ASSY 3-25
   - 8.8 CORNER COVER 3-26
   - 8.9 SIDE COVER L ASSY 3-27
   - 8.10 ROLLER HOLDER ASSY 3-28
   - 8.11 WIRELESS LAN PCB ASSY (only HL-2170W) 3-30
   - 8.12 MAIN SHIELD COVER PLATE 3-31
   - 8.13 MAIN PCB ASSY 3-32
   - 8.14 TOP COVER ASSY 3-33
     - 8.14.1 TOP COVER ASSY 3-33
     - 8.14.2 PAPER STACK LEVER 3-34
     - 8.14.3 SUPPORT FLAP 1 / SUPPORT FLAP 2 3-35
     - 8.14.4 EJECT ROLLER ASSY 2 / BUSH R / BUSH L 3-36
   - 8.15 SW SUPPORTER 3-37
   - 8.16 PANEL PCB ASSY 3-38
   - 8.17 HIGH-VOLTAGE PS PCB ASSY 3-39
   - 8.18 NEW TONER SENSOR HARNESS ASSY 3-40
   - 8.19 FILTER ASSY 3-41
   - 8.20 LASER UNIT 3-42

Confidential

8.21 FAN MOTOR 60 UNIT / COVER SENSOR HARNESS ASSY / TONER LED PCB ASSY 3-44
8.21.1 FAN MOTOR 60 UNIT 3-44
8.21.2 COVER SENSOR HARNESS ASSY 3-45
8.21.3 TONER LED PCB ASSY 3-46
8.22 LVPS 3-48
8.22.1 PS PCB UNIT 3-48
8.22.2 LV SHIELD PLATE 2 3-50
8.23 REGISTRATION FRONT SENSOR PCB ASSY 3-51
8.24 REGISTRATION REAR SENSOR PCB ASSY 3-56
8.25 DRIVE SUB ASSY 3-60
8.26 DEV JOINT / DEV GEAR JOINT/53R / REGISTRATION PENDULUM GEAR SPRING 3-62
8.27 TONER SENSOR PCB UNIT ASSY 3-63
8.28 REGISTRATION SOLENOID / T1 SOLENOID 3-64
8.28.1 REGISTRATION SOLENOID 3-64
8.28.2 T1 SOLENOID 3-66
8.29 MAIN SHIELD PLATE / EJECT SENSOR PCB ASSY 3-67
8.30 RUBBER FOOT 3-71
8.31 MAIN FRAME L ASSY 3-72

CHAPTER 4 ADJUSTMENTS AND UPDATING OF SETTINGS, REQUIRED AFTER PARTS REPLACEMENT 4-1

1. IF YOU REPLACE THE MAIN PCB 4-1
2. IF YOU REPLACE THE WIRELESS LAN PCB 4-12
3. IF YOU REPLACE THE LASER UNIT 4-13

CHAPTER 5 SERVICE SUPPORT SOFTWARE 5-1

1. CONTROL PANEL 5-1
1.1 List of service support functions 5-2
1.2 User Mode 5-3
1.3 Service Mode 5-5
2. OTHER SERVICE FUNCTIONS 5-16
2.1 User Maintenance Mode 5-16

CHAPTER 6 CIRCUIT DIAGRAMS, WIRING DIAGRAM 6-1

APPENDIX 1 SERIAL NUMBERING SYSTEM ..... App. 1-1

APPENDIX 2 SCREW CATALOGUE ..... App. 2-1

APPENDIX 3 DELETION OF PERSONAL INFORMATION ..... App. 3-1

APPENDIX 4 REFERENCES ..... App. 4-1

APPENDIX 5 GLOSSARY ..... App. 5-1

REGULATION

<For Europe and Other countries>

■ Radio interference (220 to 240 volt model only)

This machine follows EN55022 (CISPR Publication 22)/Class B.

■ IEC 60825-1 specification (220 to 240 volt model only)

This machine is a Class 1 laser product as defined in IEC 60825-1 specifications. The label shown below is attached in countries where it is needed.

This machine has a Class 3B laser diode which produces invisible laser radiation in the laser unit. You should not open the laser unit under any circumstances.

Caution

Use of controls or adjustments or performance of procedures other than those specified in this manual may result in hazardous radiation exposure.

For Finland and Sweden

LUOKAN 1 LASERLAITE

KLASS 1 LASER APPARAT

Varoitus!

Laitteen käyttäminen muulla kuin tässä käyttöohjeessa mainitulla tavalla saattaa altistaa käyttäjän turvallisuusluokan 1 ylittävälle näkymättömälle lasersäteilylle.

Varning

Om apparaten används på annat sätt än i denna Bruksanvisning specificerats, kan användaren utsättas för osynlig laserstrålning, som överskrider gränsen för laserklass 1.

■ Internal laser radiation

Maximum radiation power:	10 mW
Wave length:	780 - 800 nm
Laser class:	Class 3B

■ EU Directive 2002/96/EC and EN50419

(European Union only)

This equipment is marked with the recycling symbol below. It means that at the end of the life of the equipment you must dispose of it separately at an appropriate collection point and not place it in the normal domestic unsorted waste stream. This will benefit the environment for all. (European Union only)

<For USA and Canada>

■ Federal Communications Commission (FCC) Declaration of Conformity (For USA)

Responsible Party: Brother International Corporation
100 Somerset Corporate Boulevard
P.O. Box 6911
Bridgewater, NJ 08807-0911
USA
Telephone: (908) 704-1700

declares, that the products

Product name: Laser Printer HL-2140, HL-2150N and HL-2170W

Model number: HL-21

complies with Part 15 of the FCC Rules. Operation is subject to the following two conditions: (1) This device may not cause harmful interference, and (2) this device must accept any interference received, including interference that may cause undesired operation.

This equipment has been tested and found to comply with the limits for a Class B digital device, pursuant to Part 15 of the FCC Rules. These limits are designed to provide reasonable protection against harmful interference in a residential installation. This equipment generates, uses, and can radiate radio frequency energy and, if not installed and used in accordance with the instructions, may cause harmful interference to radio communications. However, there is no guarantee that interference will not occur in a particular installation. If this equipment does cause harmful interference to radio or television reception, which can be determined by turning the equipment off and on, the end user is encouraged to try to correct the interference by one or more of the following measures:

- Reorient or relocate the receiving antenna.
- Increase the separation between the equipment and receiver.
- Connect the equipment into an outlet on a circuit different from that to which the receiver is connected.
- Consult the dealer or an experienced radio/TV technician for help.

Important

A shielded interface cable should be used to ensure compliance with the limits for a Class B digital device. Changes or modifications not expressly approved by Brother Industries, Ltd. could void the user's authority to operate the equipment.

Confidential

■ Industry Canada Compliance Statement (For Canada)

This Class B digital apparatus complies with Canadian ICES-003.

Cet appareil numérique de la classe B est conforme à la norme NMB-003 du Canada.

■ Laser Safety (110 to 120 volt model only)

This machine is certified as a Class 1 laser product under the U.S. Department of Health and Human Services (DHHS) Radiation Performance Standard according to the Radiation Control for Health and Safety Act of 1968. This means that the machine does not produce hazardous laser radiation.

Since radiation emitted inside the machine is completely confined within protective housings and external covers, the laser beam cannot escape from the machine during any phase of user operation.

■ FDA Regulations (110 to 120 volt model only)

The U.S. Food and Drug Administration (FDA) has implemented regulations for laser products manufactured on and after August 2, 1976. Compliance is mandatory for products marketed in the United States. The following label on the back of the machine indicates compliance with the FDA regulations and must be attached to laser products marketed in the United States.

MANUFACTURED:

Brother Technology (Shenzhen) Ltd.
NO6 Gold Garden Ind., Nanling Buji, Longgang, Shenzhen, China
This product complies with FDA performance standards for laser products except for deviations pursuant to Laser Notice No.50, dated Jun 24, 2007.

■ Internal laser radiation

Maximum radiation power:	10 mW
Wave length:	780 - 800 nm
Laser class:	Class 3B

SAFETY INFORMATION

■ Caution for Laser Product (WARNHINWEIS fur Laser drucker)

CAUTION: When the machine during servicing is operated with the cover open, the regulations of VBG 93 and the performance instructions for VBG 93 are valid.

CAUTION: In case of any trouble with the laser unit, replace the laser unit itself. To prevent direct exposure to the laser beam, do not try to open the enclosure of the laser unit.

ACHTUNG: Im Falle von Störungen der Lasereinheit muß diese ersetzt werden. Das Gehäuse der Lasereinheit darf nicht geöffnet werden, da sonst Laserstrahlen austreten können.

■ Additional Information

When servicing the optical system of the machine, be careful not to place a screwdriver or other reflective object in the path of the laser beam. Be sure to take off any personal accessories such as watches and rings before working on the machine. A reflected beam, though invisible, can permanently damage the eyes.

Since the beam is invisible, the following caution label is attached on the laser unit.

■ Definitions of Warnings, Cautions, Notes and Memos

The following conventions are used in this manual:

Mark	Contents
	Warnings tell you what to do to prevent possible personal injury.
	Electrical Hazard icons alert you to a possible electrical shock.
	Hot Surface icons warn you not to touch machine parts that are hot.
	Cautions specify procedures you must follow or avoid to prevent possible damage to the machine or other objects.
Note	Notes tell you useful tips when servicing the machine.
Memo	Memo tells you bits of knowledge to help understand the machine.

■ Safety Precautions

Listed below are the various kinds of “WARNING” messages included in this manual.

WARNING

There are high voltage electrodes inside the machine. Before you clean the inside of the machine or replace parts, make sure that you have turned off the power switch and unplugged the machine from the AC power outlet.

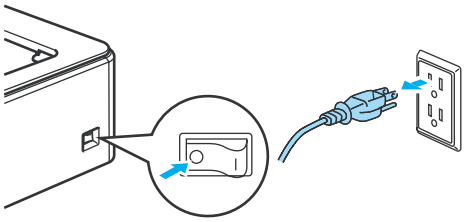

DO NOT handle the plug with wet hands. Doing this might cause an electrical shock.

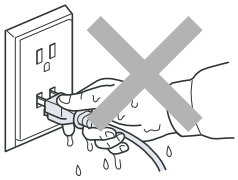

The fuser unit becomes extremely hot during operation. Wait until it has cooled down sufficiently before replacing consumable items. DO NOT remove or damage the caution label located on or around the fuser.

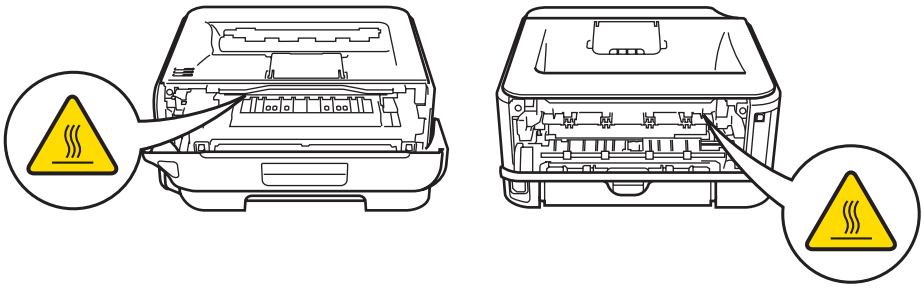

WARNING

DO NOT use flammable substances such as alcohol, benzine, thinner or any type of spray to clean the inside or outside of the machine. Doing this may cause a fire or electrical shock.

If the machine becomes hot, blows smoke, or generates obscure odor, immediately turn off the power switch and unplug the machine from the AC power outlet.

If metal objects, water or other liquids get inside the machine, immediately turn off the power switch and unplug the machine from the AC power outlet.

Caution

Lightning and power surges can damage this product! We recommend that you use a quality surge protection device on the AC power line, or unplug the machine during a lightning storm.

CHAPTER 1 TROUBLESHOOTING

1. INTRODUCTION

Troubleshooting is the countermeasure procedures that the service personnel should follow if an error or malfunction occurs with the machine. It is impossible to anticipate all of the possible troubles which may occur in future and determine the troubleshooting procedures, so this chapter covers some sample troubles. However, those samples will help the service personnel pinpoint and repair other defective elements.

1.1 Precautions

Be sure to observe and follow all the precautions to prevent any secondary problems from happening during troubleshooting.

(1) Always turn off the power and unplug the power cable before removing any covers or PCBs, adjusting the machine and so on. If you need to take voltage measurements with the power switched on, take the greatest of care not to receive an electric shock.

(2) When connecting or disconnecting cable connectors, make sure that you hold the connector body and not the cables.

(3) Electronic devices are sensitive to static build up; make sure that you touch a metal portion of the machine to discharge yourself before accessing the PCBs.
Handle PCBs with care when repairing them.

(4) Follow the warning by all means.

The fuser unit becomes extremely hot during operation. Wait until it has cooled down sufficiently before replacing consumable items. DO NOT remove or damage the caution label located on or around the fuser.

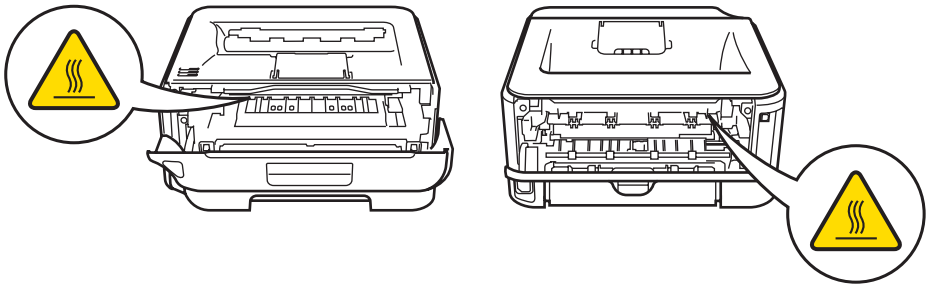

(5) Verify again that the repaired portion works properly.

1.2 Part names

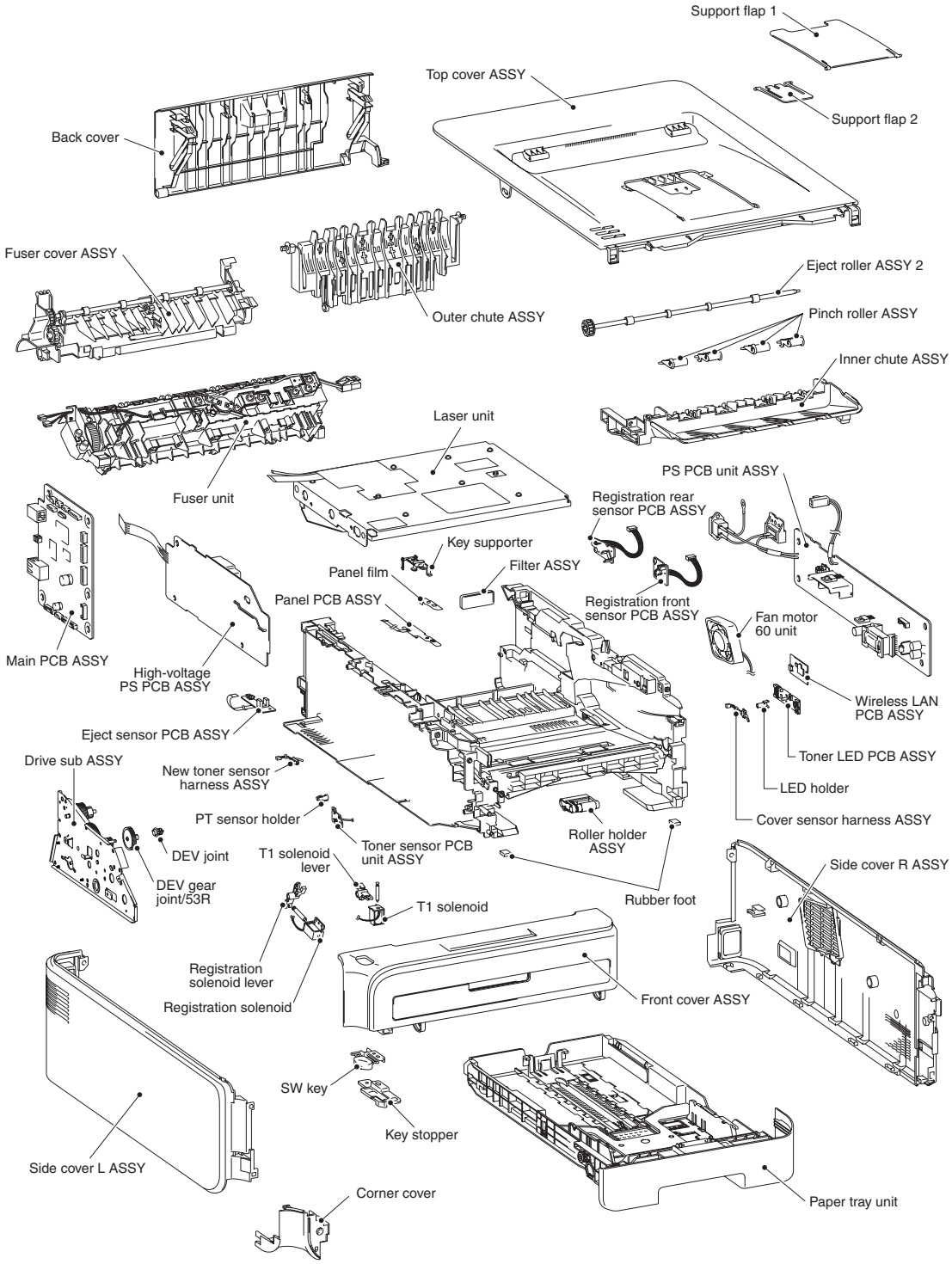

Fig. 1-1

1.3 Initial Check

Check the following items before attempting to repair the machine.

■ Operating Environment

(1) Put your machine on a flat, stable surface such as a desk that is free of vibration and shocks.

(2) Use the machine in a well-ventilated room; use the machine within the following ranges of temperature and humidity: temperature between 10°C and 32.5°C (50°F to 90.5°F), and the relative humidity is maintained between 20% and 80%.

(3) The machine is not exposed to direct sunlight, excessive heat, moisture, or dust.

■ Power Supply

(1) The AC input power supply described on the rating plate of the machine should be within ±10% of the rated voltage.

(2) The AC input power supply is within the regulated value.

(3) The cables and harnesses are connected correctly.

(4) The fuses are not blown.

■ Paper

(1) A recommended type of paper is being used.
(Refer to “2.6 Paper”, Reference 1 of the Service Reference Manual.)

(2) The paper is not damp.

(3) The paper is not short-grained paper or acid paper.

■ Consumable Parts

(1) The drum unit (including the toner cartridge) is installed correctly.

■ Others

(1) Condensation

When the machine is moved from a cold place into a warm room, condensation may occur inside the machine, causing various problems as listed below.

- Condensation on the optical surfaces such as the scanner window, lenses, the reflection mirror and the protection glass may cause the print image to be light.
- If the exposure drum is cold, the electrical resistance of the photosensitive layer is increased, making it impossible to obtain the correct contrast when printing.
- Condensation on the charge unit may cause corona charge leakage.
- Condensation on the plate and separation pad may cause paper feed failures.

If condensation has occurred, leave the machine for at least 2 hours to allow it to reach room temperature.

If the drum unit is unpacked soon after it is moved from a cold place to a warm room, condensation may occur inside the unit which may cause incorrect images. Instruct the end user to allow the unit to come to room temperature before unpacking it. This will take one or two hours.

(2) Cleaning

Use a soft dry cloth.

CAUTION:

DO NOT use flammable substances such as alcohol, benzine, thinner or any type of spray to clean the inside or outside of the machine. Doing this may cause a fire or electrical shock.

2. DISTINGUISH ERROR CAUSE

2.1 LED indication

2.1.1 LED indication at Operator Calls

Distinguish the contents of message by LED indication in the control panel. See the reference page and take the corrective action described for each indication to correct it. when the red Error LED is ON or blinking to indicate it, the machine automatically recovers from most errors. But some of errors are necessary to reset the machine by holding down the [Go] button.

LED indication of the following table is that

LED is OFF, LED is ON and LED is blinking.

LED	Type of error	Error clearance by pressing the [Go] button	Refer to:
Toner Drum Error	**1) Toner low**	N/A	**1-9**
Toner Drum Error	**2) Drum life end soon**	N/A	**1-9**
Toner Drum Error	**3) Toner cartridge is at the end of life**	N/A	**1-9**
	4) Cartridge position error	N/A	**1-10**

Confidential

LED	Type of error	Error clearance by pressing the [Go] button	Refer to:
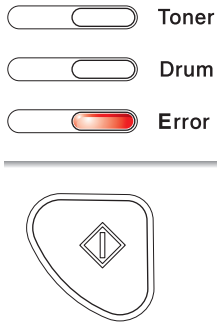	**5) No paper fed tray 1**	N/A	**1-10**
	6) No paper fed manual feed slot	N/A	**1-11**
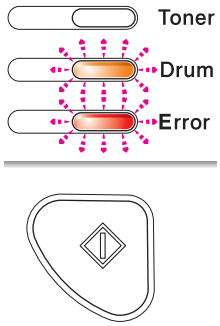	**7) Drum error**	N/A	**1-11**
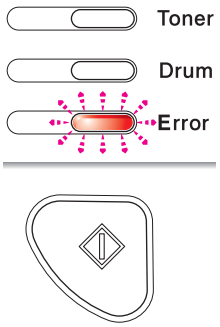	**8) Front cover is open**	N/A	**1-13**
	9) Fuser cover is open	N/A	**1-13**
	10) Paper jam (JAM TRAY 1, JAM INSIDE /JAM REAR)	N/A	**1-14**
	11) Memory full	Yes	**1-16**
	12) Print overrun	Yes	**1-16**

2.1.2 LED indication at Service Calls

If service calls occur, all four LEDs blink on and off to notice it. And then when press the [Go] button, distinguish a fault from the specific combination of ON/OFF and status color of the LED.

When entering this state, instruct the end user to turn off the power switch, wait a few seconds and the same service call appears, see the reference page to take the corrective action.

LED	Pressing one time of the [Go] button		Type of error	Refer to:
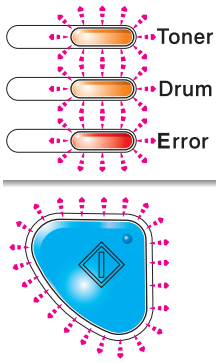		Toner Drum Error	13) Main PCB failure	1-16
		Toner Drum Error	14) Fuser unit failure	1-16
		Toner Drum Error	15) Laser unit failure	1-17
		Toner Drum Error	16) Main motor failure	1-17
		Toner Drum Error	17) High-voltage power supply PCB failure	1-17
		Toner Drum Error	18) Fan failure	1-17

Confidential

2.2 Message indication

2.2.1 Error indication at Service Calls

If LED indication does not operate when service calls occur, you can use a maintenance tool to distinguish the type of error.

Error indication (Printing of Printer Settings)	Error indication (Printing of Maintenance)	Type of error	Refer to:
ERROR S01	ERROR S01	**13) Main PCB failure**	**1-16**
ERROR S02	ERROR S02		
ERROR S03	ERROR S03		
ERROR S04	ERROR S04		
ERROR S05	ERROR S05		
ERROR S06	ERROR S06		
ERROR S07	ERROR S07		
ERROR S08	ERROR S08		
ERROR S09	ERROR S09		
ERROR S10	ERROR S10		
ERROR S11	ERROR S11		
ERROR S12	ERROR S12		
ERROR S13	ERROR S13		
ERROR E49	FUSER MALF 2	**14) Fuser unit failure**	**1-16**
ERROR E50	FUSER MALF		
ERROR FUSER	ERROR FUSER		
ERROR E51	LASER BD MALF	**15) Laser unit failure (Laser beam detection error)**	**1-17**
ERROR E52	SCANNER MALF	**15) Laser unit failure (Scanner motor failure)**	**1-17**
ERROR E54	MOTOR MALF	**16) Main motor failure**	**1-17**
ERROR E55	HIGH VOL MALF	**17) High-voltage power supply PCB failure**	**1-17**
ERROR E60	ERROR E60	**18) Fan failure**	**1-17**
ERROR H61	PROG ERROR	**13) Main PCB failure**	**1-16**
ERROR H63	ERROR H63		
ERROR H66	NV-W ERROR		
ERROR H67	NV-R ERROR		
ERROR H68	NV-B ERROR		

2.3 Error Cause and Remedy

Memo :

- The following troubleshooting sections contain both the actions which end users should take or check and the ones which service technicians should perform.

1) Toner low

Replacing of the toner cartridge

User Check

- Gently shake the toner cartridge from side to side and install it again.
- Replace the toner cartridge.

Step	Cause	Remedy
1	Harness connection failure of toner sensor PCB ASSY	Check the sensor performance following the procedure in "Factory Inspection Mode" (Chapter 5). If any problem occurs, check the harness connection of the toner sensor PCB ASSY, then reconnect it.
2	Toner sensor PCB ASSY failure	Replace the toner sensor PCB ASSY.
3	Panel PCB ASSY failure	Replace the panel PCB ASSY.
4	Main PCB ASSY failure	Replace the main PCB ASSY.

2) Drum life end soon

Replacing of drum unit

User Check

- Replace the drum unit with a new one.
- Reset the counter. (Refer to "Resetting the drum counter" of "2.1 User Maintenance Mode" in Chapter 5.)

3) Toner cartridge is at the end of life

User Check

- Gently shake the toner cartridge from side to side and install it again.
- Replace the toner cartridge.

Step	Cause	Remedy
1	Harness connection failure of toner sensor PCB ASSY	Check the sensor performance following the procedure in "Factory Inspection Mode" (Chapter 5). If any problem occurs, check the harness connection of the toner sensor PCB ASSY, then reconnect it.
2	Toner sensor PCB ASSY failure	Replace the toner sensor PCB ASSY.
3	Panel PCB ASSY failure	Replace the panel PCB ASSY.
4	Main PCB ASSY failure	Replace the main PCB ASSY.

4) Cartridge position error

Identification failure for a new toner cartridge.

User Check

- Install the toner cartridges into the machine properly.

Step	Cause	Remedy
1	Power off or front cover opened while detecting a new toner cartridge.	Reset the developing bias voltage and develop roller counter. (Refer to "Developer Roller Counter Reset" in Chapter 5.)

5) No paper fed tray 1

No paper in Tray (T1)

User Check

- Check if the paper is loaded into the paper tray correctly. Then press the [Go] button.

Step	Cause	Remedy
1	Registration front sensor failure	Check the sensor performance following the procedure in "Factory Inspection Mode" (Chapter 5). If any problem occurs, replace the registration front sensor PCB ASSY.
2	Lift arm and roller holder ASSY not assembled correctly	Be sure to put the boss of the roller holder ASSY into the hole on the lift arm securely.
3	Harness connection failure of registration front sensor PCB ASSY	Check the harness connections of the registration front sensor PCB ASSY, and reconnect it.
4	Harness connection failure of T1 solenoid	Check the harness connections of the T1 solenoid, and reconnect it.
5	Plate-up function malfunction	Replace the paper tray.
6	Toner LED PCB ASSY failure	Replace the toner LED PCB ASSY.
7	Main PCB ASSY failure	Replace the main PCB ASSY.

6) No paper fed manual feed slot

No paper in manual feeding

User Check

- Load the paper

Step	Cause	Remedy
1	Harness connection failure of registration front sensor PCB ASSY	Check the harness connection of the registration front sensor PCB ASSY.
2	Registration front sensor PCB failure	Check the registration front sensor performance following the procedure in "Factory Inspection Mode" (Chapter 5). If any problem occurs, replace the registration front sensor PCB ASSY.
3	Toner LED PCB failure	Replace the toner LED PCB ASSY.
4	Main PCB failure	Replace the main PCB ASSY.

7) Drum error

Dirt on drum unit

User Check

- Clean the corona wire in the drum unit.
- Replace the drum unit with a new one, and reset the drum counter.

Step	Cause	Remedy
1	Dirt or dust on drum unit electrodes	Clean the electrodes on the drum unit and the machine body (Refer to Fig. 1-2).
2	High-voltage power supply PCB failure	Replace the high-voltage power supply PCB.
3	Main PCB ASSY failure	Replace the main PCB ASSY failure.

■ Electrodes location of the drum unit

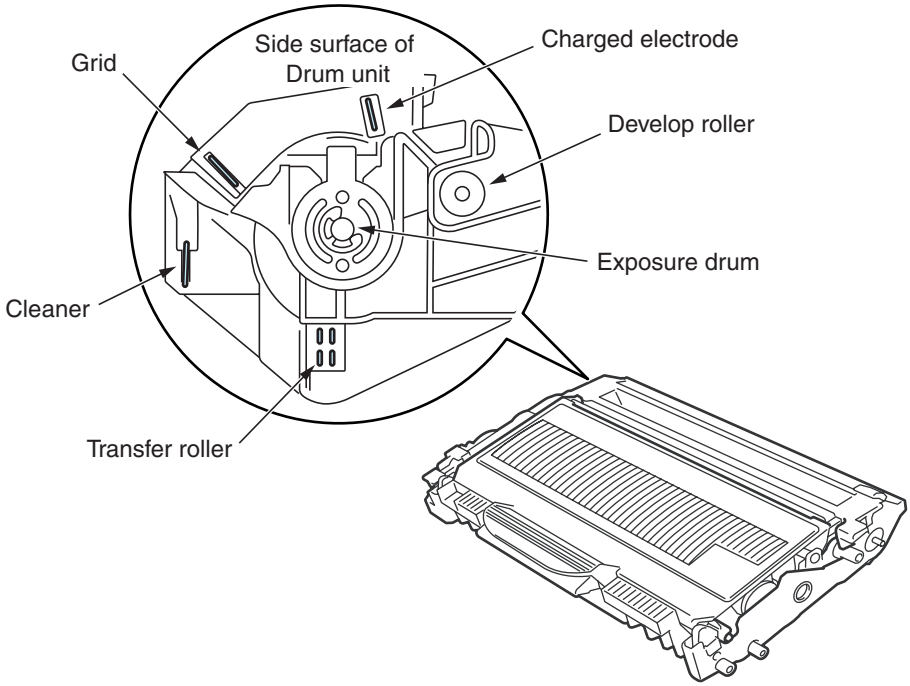

Fig. 1-2

■ Electrodes location of the machine

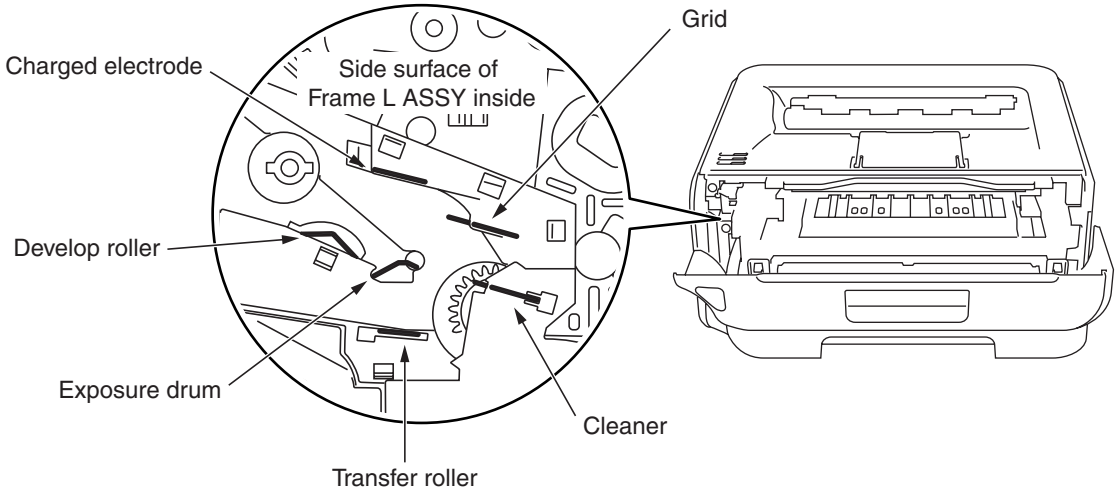

Fig. 1-3

<How to clean the electrodes>

Turn off the power switch. Unplug the machine from the AC power outlet, and leave the machine for a few minutes. Then, wipe the electrodes above carefully with a dry lint-free cloth. Be careful not to change the shapes of the electrodes.

Confidential

8) Front cover is open

Front cover opened

User Check

- Check if the front cover is closed certainly.

Step	Cause	Remedy
1	Cover sensor harness ASSY failure	Check the sensor performance following the procedure in "Factory Inspection Mode" (Chapter 5). If any problem occurs, replace the Cover sensor harness ASSY.
2	Harness connection failure of Cover sensor harness ASSY	Check the harness connection of the Cover sensor harness ASSY and reconnect it.
3	Part pressing the Cover sensor harness ASSY is broken, which is provided at inside of front cover	Replace the front cover ASSY.
4	Toner LED PCB ASSY failure	Replace the toner LED PCB ASSY.
5	Main PCB ASSY failure	Replace the main PCB ASSY.

9) Fuser cover is open

Fuser cover opened

User Check

- Check if the fuser cover is closed certainly.

Step	Cause	Remedy
1	Paper eject actuator catching on some position	Correct catching of the paper eject actuator.
2	Paper eject actuator failure	Replace the paper eject actuator.
3	Eject sensor PCB ASSY failure	Replace the eject sensor PCB ASSY.
4	Main PCB ASSY failure	Replace the main PCB ASSY.

10) Paper jam

- **JAM TRAY 1**

  No paper in Tray 1 (T1)

  User Check

  - Check if the paper is jammed in the appropriate tray. If jammed, remove it.
  - Adjust the paper guide corresponding to the paper size.
  - Check if too much paper is loaded in the tray.

Step	Cause	Remedy
1	Edge actuator or registration front actuator catching on some position	Correct catching of the edge actuator or registration front actuator.
2	Paper feeding kit worn out	Replace the paper feeding kit.
3	Harness connection failure of registration front sensor PCB	Check the harness connections of the registration front sensor PCB, and reconnect it.
4	Registration front sensor PCB failure	Check the edge sensor and registration front sensor performance following the procedure in "Factory Inspection Mode" (Chapter 5). If any problem occurs, replace the registration front sensor PCB ASSY.
5	Toner LED PCB failure	Replace the toner LED PCB ASSY.
6	Registration ground spring loose	Fit the registration ground spring correctly. (Refer to Fig. 1-4.)
7	Main PCB failure	Replace the main PCB ASSY.

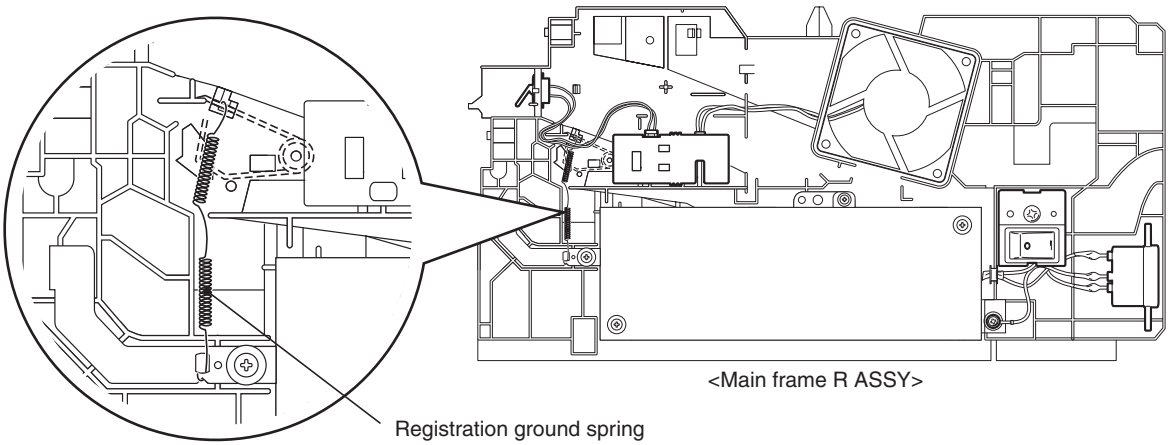

Fig. 1-4

- **JAM INSIDE/JAM REAR**

  Paper jam inside the machine

  User Check

  - Check if the paper is jammed. If jammed, remove it.
  - Check if the fuser cover is closed certainly.

Step	Cause	Remedy
1	Harness connection failure of registration front sensor PCB ASSY, paper eject sensor PCB ASSY or registration rear sensor PCB ASSY	Check the harness connections of the registration front sensor PCB ASSY, paper eject sensor PCB ASSY or registration rear sensor PCB ASSY, and reconnect them.
2	Registration front actuator, registration rear actuator or paper eject actuator catching on some position	Correct catching of the registration front actuator, registration rear actuator or paper eject actuator.
3a	Paper eject sensor PCB failure	Check the sensor performance following the procedure in "Factory Inspection Mode" (Chapter 5). If any problem occurs, replace the eject sensor PCB ASSY.
3b	Registration front sensor PCB failure	Check the sensor performance following the procedure in "Factory Inspection Mode" (Chapter 5). If any problem occurs, replace the registration front sensor PCB ASSY.
3c	Registration rear sensor PCB failure	Check the sensor performance following the procedure in "Factory Inspection Mode" (Chapter 5). If any problem occurs, replace the registration rear sensor PCB ASSY.
4	Toner LED PCB failure	Replace the toner LED PCB ASSY.
5	Main PCB failure	Replace the main PCB ASSY.

11) Memory full

Memory full

User Check

- Press the [Go] button, then print the stored data.
- Reduce the data capacity or reduce the print resolution.

12) Print overrun

Data expansion is not in time

User Check

- Reduce the complexity of data or reduce the print resolution.

13) Main PCB failure

User Check

- Turn the power off and on.

Step	Cause	Remedy
1	Main PCB failure	Replace the main PCB ASSY.

14) Fuser unit failure

Step	Cause	Remedy
1	Harness connection failure between fuser unit connector and eject sensor PCB ASSY	Check the harness connection between fuser unit connector and eject sensor PCB ASSY.
2	Fuser unit failure	Replace fuser unit.
3	Low-voltage power supply PCB failure	Replace the PS PCB unit.
4	Toner LED PCB failure	Replace the toner LED PCB ASSY.
5	Main PCB failure	Replace the main PCB ASSY.

CAUTION:

This problem will be cleared if leaving the machine power ON for ten minutes.

Turn the power on while pressing the SW supporter, when the front cover is open. And check that Toner, Drum and Error LEDs light up, and then release the SW supporter.
Check that all LEDs go off and press the SW supporter once, and then this problem may be cleared by that press the SW supporter once again after all LEDs light up.

15) Laser unit failure

Laser diode failure

Step	Cause	Remedy
1	Laser unit harness connection failure	Check the two harness connections of the laser unit and reconnect them.
2	FG harness ASSY connection failure	Check the FG harness ASSY connection between the laser unit and main PCB ASSY. Then reconnect it.
3	Laser unit failure	Replace the laser unit.
4	Main PCB failure	Replace the main PCB ASSY.

16) Main motor failure

Step	Cause	Remedy
1	Main motor harness connection failure	Check the harness connection of the main motor and reconnect it.
2	Main motor failure	Replace the drive sub ASSY.
3	Low-voltage power supply PCB failure	Replace the PS PCB unit.
4	Main PCB failure	Replace the main PCB ASSY.

17) High-voltage power supply PCB failure

Step	Cause	Remedy
1	High-voltage power supply PCB ASSY harness connection failure	Check the harness connection between the high-voltage power supply PCB and main PCB. Then reconnect it.
2	High-voltage power supply PCB failure	Replace the high-voltage power supply PCB ASSY.
3	Low-voltage power supply PCB failure	Replace the PS PCB unit.
4	Main PCB failure	Replace the main PCB ASSY.

18) Fan failure

Step	Cause	Remedy
1	Fan harness connection failure	Check the harness connection of the fan motor 60 unit, and reconnect it.
2	Fan failure	Replace the fan motor 60 unit.
3	Toner LED PCB failure	Replace the toner LED PCB ASSY.
4	Main PCB failure	Replace the main PCB ASSY.

3. PAPER FEEDING PROBLEMS

Problems related to paper feeding are end user recoverable if following the User Check items. If the same problem occurs again, follow each procedure in the order of the number described in the Step column in the tables below.

3.1 No Feeding

Step	Cause	Check	Result	Remedy
1	Edge actuator catching on some position	Does the edge actuator move smoothly?	No	Re-assembly the edge actuator
2	Roller holder ASSY catching on some position	Does the roller holder ASSY move smoothly?	Yes	Re-assembly the roller holder ASSY.
3	Registration front sensor failure	Is the problem solved after replacing the registration front sensor PCB ASSY?	Yes	Replace the registration front sensor PCB ASSY.
4	Paper feeding kit failure	Is the surface of the separation pad or the pickup roller dirty or worn out?	Yes	1) Clean the surface of the separation pad or pickup roller. 2) Replace the separation pad or pickup roller.
5	Pressure plate gear damage	Is the pressure plate gear damaged?	Yes	Replace the paper tray.
6	T1 solenoid failure	Does the T1 solenoid work correctly?	No	Replace the T1 solenoid
7	T1 solenoid pathway of the high-voltage power supply PCB broken	Is the problem solved after replacing the high-voltage power supply PCB ASSY?	Yes	Replace the high-voltage power supply PCB ASSY.
8	Main PCB failure	Is the problem solved after replacing the main PCB ASSY?	Yes	Replace the main PCB ASSY.
9	Main motor failure	Is the problem solved after replacing the drive sub ASSY?	Yes	Replace the drive sub ASSY.

3.2 Double Feeding

Step	Cause	Check	Result	Remedy
1	Paper feeding kit failure	Is the surface of the separation pad worn out?	Yes	Replace the paper feeding kit.

3.3 Paper Jam

■ Paper jam in the paper tray and front cover

Step	Cause	Check	Result	Remedy
1	Registration front actuator/edge actuator catching on some position	Does the registration front actuator/edge actuator move smoothly?	No	Re-assemble the registration front actuator/ edge actuator.
2	Registration front sensor PCB (registration front actuator/edge actuator failure)	Does the registration front sensor move smoothly? (Check it following the procedure described in "Factory Inspection Mode" in Chapter 5)	No	Replace the registration front sensor PCB ASSY.
3	Registration solenoid failure	Is the problem solved after replacing the registration solenoid?	Yes	Replace the registration solenoid.
4	Toner LED PCB failure	Is the problem solved after replacing the toner LED PCB ASSY?	Yes	Replace the toner LED PCB ASSY.
5	High-voltage power supply PCB failure	Is the problem solved after replacing the High-voltage power supply PCB ASSY?	Yes	Replace the High-voltage power supply PCB ASSY.
6	Registration ground spring loose	Is the registration ground spring fitted correctly?	No	Fit the registration ground spring correctly. (Refer to Fig. 1-4.)
7	Main PCB failure	Is the problem solved after replacing the Main PCB ASSY?	Yes	Replace the Main PCB ASSY.

■ Paper jam in the back cover and paper eject section

Step	Cause	Check	Result	Remedy
1	Foreign object around fuser unit	Is there a foreign object around the fuser unit?	Yes	Remove the foreign object.
2	Paper eject actuator failure	Does the paper eject actuator move smoothly? Is it damaged?	No	Replace the paper eject actuator.
3	Fuser cover ASSY loose	Is the fuser cover ASSY fitted correctly?	No	Fit the fuser cover ASSY correctly.
4	Outer chute ASSY loose	Is the outer chute ASSY fitted correctly?	No	Fit the outer chute ASSY fitted correctly.
5	Eject roller 2 malfunction	Is each pinch roller of the inner chute ASSY attached to each eject roller 2 of top cover ASSY properly?	No	Replace the inner chute ASSY.
6	Paper eject sensor PCB failure	Is the problem solved after replacing the paper eject sensor PCB?	Yes	Replace the paper eject sensor PCB ASSY.

3.4 Dirt on Paper

User Check

- Check if the paper is loaded into the paper tray correctly.
- Turn over the stack of paper in the paper tray, or try rotating the paper 180° in the paper tray.

Step	Cause	Check	Result	Remedy
1	Fuser unit dirty	Is there dirt around the entrance of the fuser unit?	Yes	Clean the entrance of the fuser unit.
		Is the pressure roller ASSY dirty?	Yes	Clean the pressure roller ASSY.

3.5 Wrinkles or creases

User Check

- Check if the paper is loaded into the paper tray correctly.
- Turn over the stack of paper in the paper tray, or try rotating the paper 180° in the paper tray.

Step	Cause	Check	Result	Remedy
1	Fuser unit dirty	Is there dirt around the entrance of the fuser unit?	Yes	Clean the entrance of the fuser unit.
2	Fuser unit failure	Is the problem solved if new fuser unit is replaced?	Yes	Replace the fuser unit.

3.6 Waves in the paper / folds in the paper at the eject roller 2

User Check

- Check that the problem is solved if new paper is used.

Step	Cause	Check	Result	Remedy
1	Foreign object around eject roller 2	Is there a foreign object around the eject roller 2?	Yes	Remove the foreign object.
2	Eject roller 2 failure	Is the problem solved after replacing the new eject roller 2?	Yes	Replace the top cover ASSY.

3.7 Curl in the paper

Step	Cause	Check	Result	Remedy
1	High pressure of pressure roller in the fuser unit	Is the problem solved by changing the position of the pressure roller?	Yes	Change the position of the pressure roller.

(1) Turn the Nip release lever of right and left to the direction of the arrow.

(2) Hold and turn the PR stopper plate of right and left.

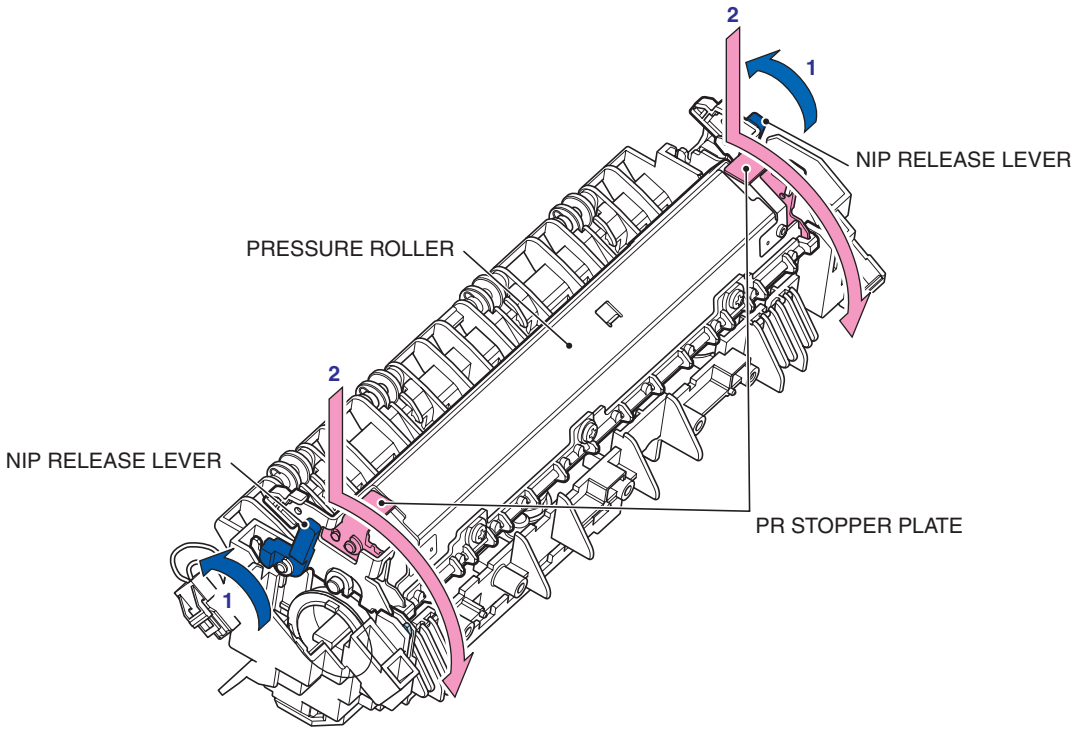

Fig. 1-5

4. IMAGE DEFECT TROUBLESHOOTING

4.1 Image Defect Examples

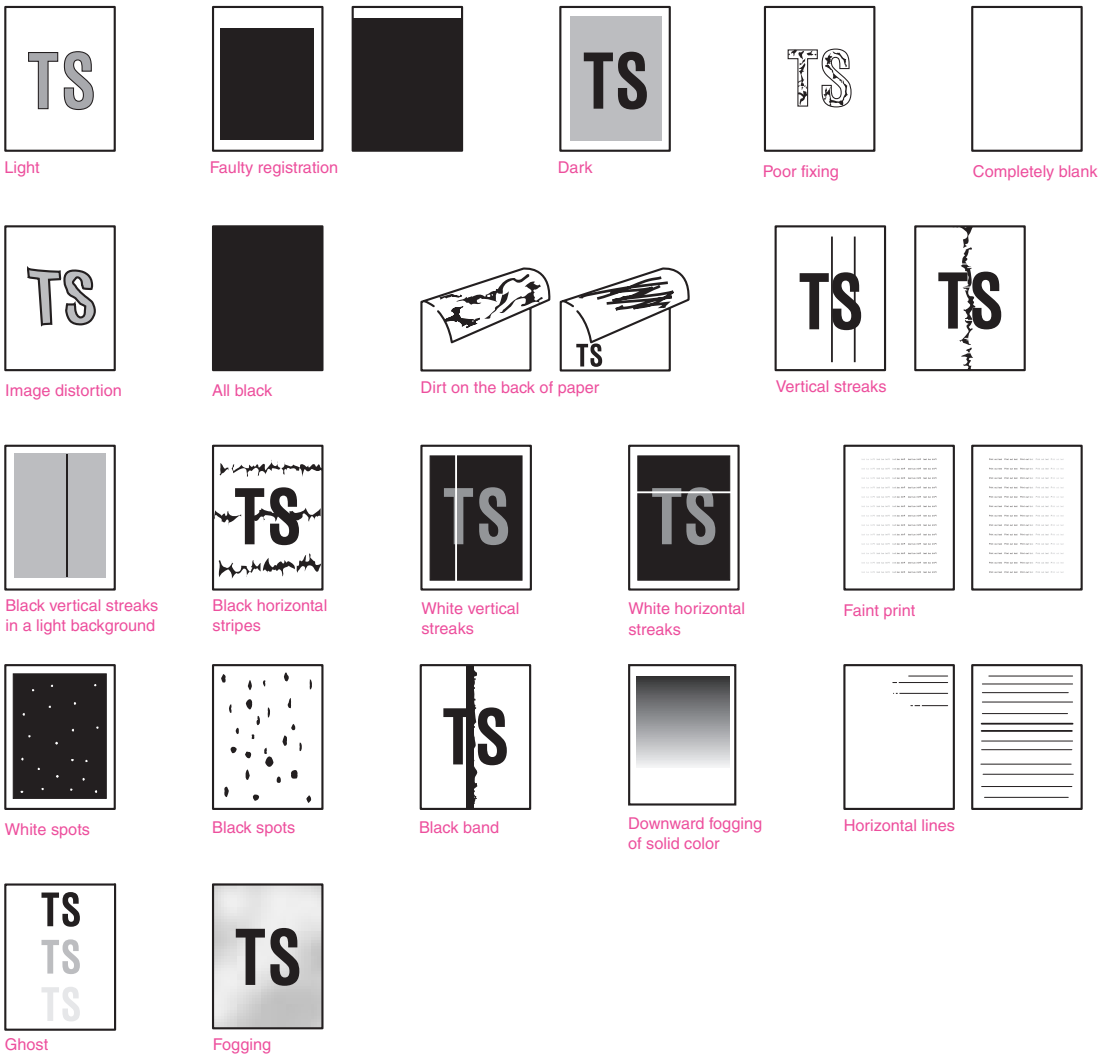

Fig. 1-6

4.2 Diameter of Rollers

Image defects which appear periodically may be caused by failure of a roller. Specify the cause referring to the diameter of the rollers or pitch which appears in the image as shown in the table below.

No.	Parts name	Diameter	The pitch which appears in the image
1	Develop roller	Ø20.0 mm	40.6 mm
2	Exposure drum	Ø24.0 mm	75.0 mm
3	Heat roller in the fuser unit	Ø25.0 mm	78.5 mm
4	Pressure roller ASSY in the fuser unit	Ø25.0 mm	78.5 mm

4.3 Troubleshooting Image Defect

Image defect related problems are end user recoverable if following the User Check items. If the same problem occurs, follow each procedure in the order of the number described in the Step column in the tables below.

■ Light

TS

User Check

- Check the machine's environment. Low temperature and low humidity conditions can cause this problem.
- If the whole page is light, toner save mode may be on.
- Replace the toner cartridge or drum unit with a new one.

Step	Cause	Check	Result	Remedy
1	Dirt on exposure drum electrode	Are the electrodes of the drum unit and machine body dirty?	Yes	Clean both electrodes. (Refer to Fig. 1-2, Fig. 1-3.)
2	Dirt on scanner windows of the laser unit	Is the scanner windows of the laser unit dirty?	Yes	Wipe the dirt off with a soft, clean, lint free cloth. (Refer to Fig. 1-7.)
3	Toner sensor failure	After replacing the toner cartridge with a new one, does the same problem occur even after printing several pages?	No	Replace the toner cartridge.
4		Does the machine start printing even after removing the toner cartridge from the drum unit?	Yes	Clean the toner sensor. (receiving light side) Check the harness connection of the toner LED PCB ASSY. (luminescence side) Replace the toner sensor PCB ASSY or toner LED PCB ASSY.
5	Between the HVPS PCB/Main PCB connection failure	Is the harness of the HVPS PCB ASSY and main PCB ASSY connected correctly?	Yes	Reconnect the harness of the HVPS PCB ASSY and main PCB ASSY.
6	HVPS PCB failure	Is the problem solved after replacing the HVPS PCB ASSY?	Yes	Replace the HVPS PCB ASSY.
7	Main PCB failure	Is the problem solved after replacing the main PCB ASSY?	Yes	Replace the main PCB ASSY.
8	Laser unit failure	Is the problem solved after replacing the laser unit?	Yes	Replace the laser unit.

<Location of the leser beam window>

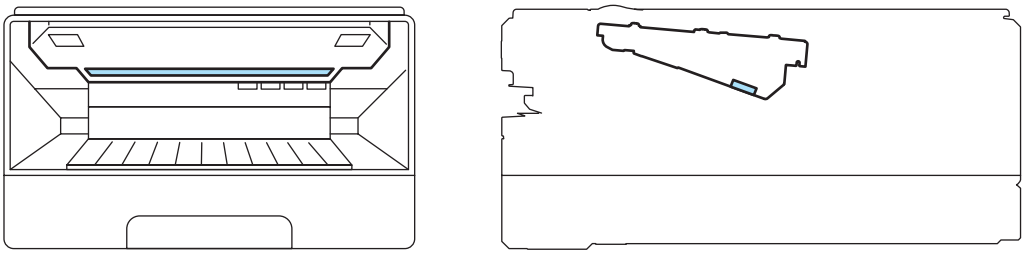

Fig. 1-7

■ Faulty registration

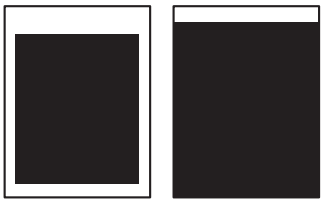

User Check

- Check that the appropriate media type is selected in the printer driver.

Step	Cause	Check	Result	Remedy
1	Registration rear actuator catching on some position	Does the registration rear actuator move smoothly?	No	Re-assemble the registration rear actuator.

■ Dark

User Check

- Check the machine's environment. High temperature and high humidity conditions can cause this problem.
- Replace the drum unit with a new one.
- Replace the toner cartridge with a new one.

Step	Cause	Check	Result	Remedy
1	HVPS PCB failure	Is the problem solved after replacing the HVPS PCB ASSY?	Yes	Replace the HVPS PCB ASSY.
2	Main PCB failure	Is the problem solved after replacing the main PCB ASSY?	Yes	Replace the main PCB ASSY.

■ Poor fixing

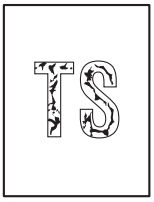

User Check

- Replace the drum unit with a new one.
- Replace the toner cartridge with a new one.

Step	Cause	Check	Result	Remedy
1	High pressure of pressure roller in the fuser unit	Is the problem solved by changing the position of the pressure roller?	Yes	Change the position of the pressure roller. (Refer to Fig. 1-5.)
2	Fuser unit failure	Is the problem solved after replacing the fuser unit?	Yes	Replace the fuser unit.
3	Low-voltage power supply PCB failure	Is the problem solved after replacing the PS PCB unit?	Yes	Replace the PS PCB unit.
4	HVPS PCB failure	Is the problem solved after replacing the HVPS PCB ASSY?	Yes	Replace the HVPS PCB ASSY.
5	Main PCB failure	Is the problem solved after replacing the main PCB ASSY?	Yes	Replace the main PCB ASSY.

■ Completely blank

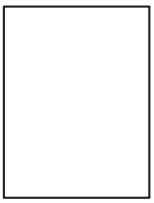

User Check

- Replace the drum unit with a new one.
- Replace the toner cartridge with a new one.

Step	Cause	Check	Result	Remedy
1	Developing bias voltage conduction failure	Are the electrodes on the drum unit and machine body dirty?	Yes	Clean both electrodes. (Refer to Fig. 1-2, Fig. 1-3.)
2	Scanner harness of the laser unit connection failure	Is the scanner harness of the laser unit connected securely?	No	Reconnect the scanner harness of the laser unit.
3	Laser unit failure	Is the problem solved after replacing the laser unit?	Yes	Replace the laser unit.
4	HVPS PCB failure	Is the problem solved after replacing the HVPS PCB ASSY?	Yes	Replace the HVPS PCB ASSY.
5	Main PCB failure	Is the problem solved after replacing the main PCB ASSY?	Yes	Replace the main PCB ASSY.

■ Image distortion

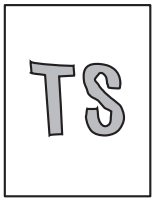

Step	Cause	Check	Result	Remedy
1	Laser unit not assembled correctly	Is the laser unit assembled into the machine securely? (Check if there is no gap.)	Yes	Assemble the laser unit correctly and secure the screw.
2	Incorrect radiation angle of scanner diode of laser unit. Scanner motor rotation failure	Is the problem solved after replacing the laser unit?	Yes	Replace the laser unit.
3	Main PCB failure	Is the problem solved after replacing the main PCB ASSY?	Yes	Replace the main PCB ASSY.

■ All black

Step	Cause	Check	Result	Remedy
1	Corona wire failure	Are the electrodes on the drum unit and machine body dirty?	Yes	Clean both electrodes. (Refer to Fig. 1-2, Fig. 1-3.)
2		Is the corona wire damaged?	Yes	Replace the drum unit.
3	Scanner harness of the laser unit connection failure	Is the scanner harness of the laser unit connected securely?	No	Reconnect the scanner harness of the laser unit.
4	FG harness ASSY connection failure	Is the FG harness ASSY between the laser unit and main PCB ASSY connected securely?	No	Reconnect the FG harness ASSY between the laser unit and main PCB ASSY securely.
5	HVPS PCB failure	Is the problem solved after replacing the HVPS PCB ASSY?	Yes	Replace the HVPS PCB ASSY.
6	Main PCB failure	Is the problem solved after replacing the main PCB ASSY?	Yes	Replace the main PCB ASSY.
7	Laser unit failure	Is the problem solved after replacing the laser unit?	Yes	Replace the laser unit.

Confidential

■ Dirt on the back of paper

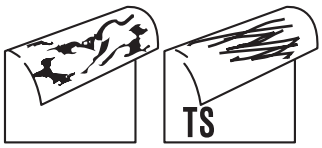

Step	Cause	Check	Result	Remedy
1	Scratch and Dirt on the fuser unit	Is the pressure roller ASSY dirty? Is any other area in the machine dirty?	Yes	Print approximate 10 pages.
			No	Replace the fuser unit.
2	Scratch and Dirt in the paper feed system	Is the paper feed system dirty?	Yes	Wipe dirt off.

■ Vertical streaks

User Check

- This problem may occur with noise which is caused by dirt on the corona wire in the drum unit. In this case, clean the corona wire with the wire cleaner.
- Replace the drum unit with a new one.
- Replace the toner cartridge with a new one.

Step	Cause	Check	Result	Remedy
1	Scratch and Dirt in the paper feed system	Is the paper feed system dirty?	Yes	Wipe dirt off.
2	Scratch and Dirt on the exposure drum	Are there scratch and dirt on the surface of the exposure drum?	Yes	Replace the drum unit.
3	Scratch and Dirt on the heat roller	Are there scratch and dirt on the surface of the heat roller?	Yes	Replace the fuser unit.

CAUTION:

If the machine prints the same pattern, especially including vertical streaks, continuously, black vertical streaks may appear on the paper since the electrostatic performance of the exposure drum is decreased temporally.

■ Black vertical streaks in a light background

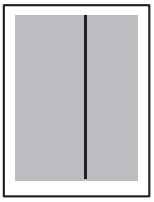

User Check

- Clean the inside of the machine and the corona wire in the drum unit.
- Replace the toner cartridge with a new one.

Step	Cause	Check	Result	Remedy
1	Drum unit failure	Is the problem solved after replacing the drum unit?	Yes	Replace the drum unit.

■ Black horizontal stripes

User Check

- Clean the inside of the machine and the corona wire in the drum unit.
- Replace the drum unit with a new one.

Step	Cause	Check	Result	Remedy
1	Dirt on the charged electrode	Are the electrodes on the drum unit and machine body dirty?	Yes	Clean both electrodes. (Refer to Fig. 1-2, Fig. 1-3.)
2	Paper tray ground terminal provided in the machine body	Is the paper tray ground terminal bent, which is provided in the machine body? (Refer to Fig. 1-8.)	Yes	Correct bending of paper tray ground terminal.
3	Toner attached on the develop roller	Are the horizontal stripes at 40.6 mm (develop roller circumference) intervals?	Yes	This problem will disappear by printing approximate 10 pages. If the same problem occurs, replace the toner cartridge.
4	Scratch and Dirt on the exposure drum	Are the horizontal stripes at 75.0 mm (exposure drum circumference) intervals?	Yes	Replace the drum unit.
5	Scratch and Dirt on the heat roller	Are the horizontal stripes at 78.5 mm (heat roller circumference) intervals?	Yes	Replace the fuser unit.
6	HVPS PCB failure	Is the problem solved after replacing the HVPS PCB ASSY?	Yes	Replace the HVPS PCB ASSY.
7	Main PCB failure	Is the problem solved after replacing the main PCB ASSY?	Yes	Replace the main PCB ASSY.

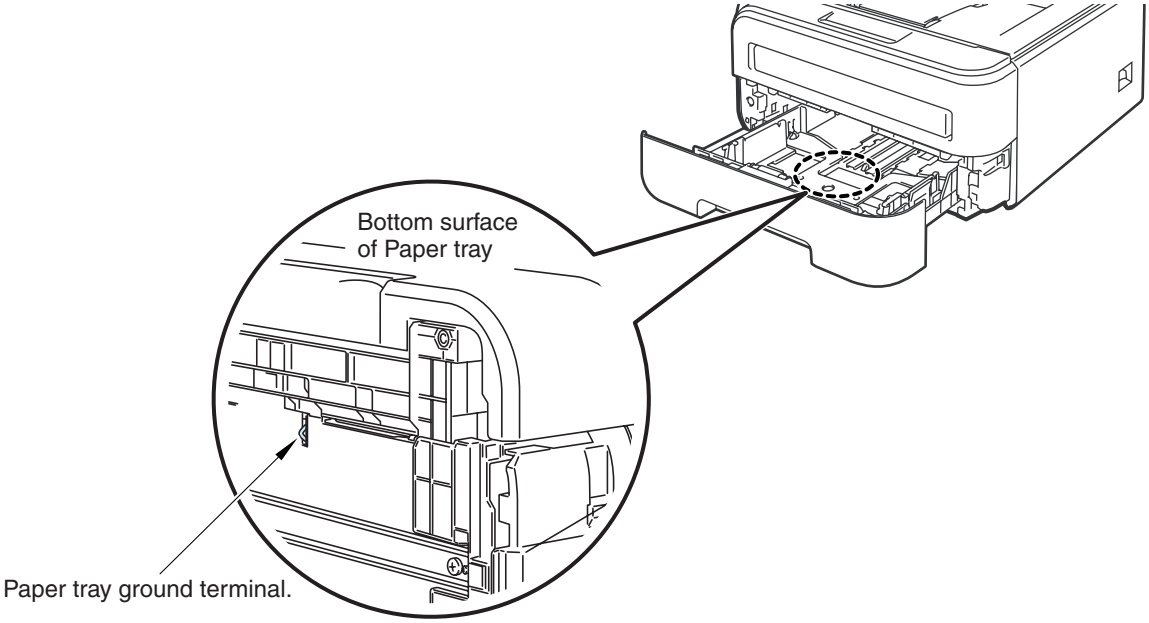

Fig. 1-8

■ White vertical streaks

User Check

- Clean the scanner windows of the laser unit with a soft lint-free cloth. (Refer to Fig. 1-7.)
- Replace the toner cartridge with a new one.
- Check the machine's environment. High temperature and high humidity conditions can cause this problem.
- Damp (wet) paper might be used. Try to change to freshly unpacked paper.
- Check if there is no dust in the gap between the toner cartridge and drum frame.

Step	Cause	Check	Result	Remedy
1	Condensation	Has condensation occurred inside the machine?	Yes	Try to print several pages or leave the machine 2 hours to allow it to reach room temperature.
2	Transfer failure	Is the transfer roller scratched?	Yes	Replace the drum unit.
3	Scanner windows of laser unit failure	Is the problem solved after replacing the laser unit?	Yes	Replace the laser unit.

■ White horizontal streaks

User Check

- Check that the appropriate media type is selected in the printer driver.
- The problem may disappear by itself. Try printing multiple pages to clear this problem especially if the machine has not been used for a long time.
- The drum unit may be damaged. Replace the drum unit with a new one.

Step	Cause	Check	Result	Remedy
1	Toner cartridge electrode contact failure	Are the electrodes on the toner cartridge and machine body dirty?	Yes	Clean both electrodes. (Refer to Fig. 1-2, Fig. 1-3.).
2	Drum unit electrode contact failure	Are the electrodes on the drum unit and machine body dirty?	Yes	Clean both electrodes. (Refer to Fig. 1-2, Fig. 1-3.).

■ Faint print

User Check

- Check that the machine is installed on a level surface.
- Replace the toner cartridge with a new one.
- Clean the scanner windows of the toner unit with a soft cloth. (Refer to Fig. 1-7.)

Step	Cause	Check	Result	Remedy
1	Main PCB failure	Is the problem solved after replacing the main PCB ASSY?	Yes	Replace the main PCB ASSY.
2	Laser unit failure	Is the problem solved after replacing the laser unit?	Yes	Replace the laser unit.
3	Toner empty sensor failure	Is the "Toner Life End" message indicated on the LCD after replacing the current toner cartridge with a new one?	No	Replace the toner sensor PCB ASSY.

■ White spots

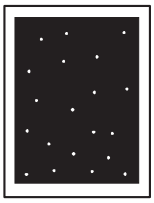

User Check

- Toner may be empty. Replace the toner cartridge with a new one.
- If the problem is not solved after printing a few pages, the drum unit may have glue from label stock on the exposure drum surface. Refer to the next page, and wipe it off gently with a cotton swab.
- The drum unit may be damaged. Replace the drum unit with a new one.

Step	Cause	Check	Result	Remedy
1	Toner attached on the develop roller	Are the horizontal stripes at 40.6 mm (develop roller circumference) intervals?	Yes	This problem will disappear by printing approximate 10 pages. If the same problem occurs, replace the toner cartridge.
2	Scratch and Dirt on the exposure drum	Are the horizontal stripes at 75.0 mm (exposure drum circumference) intervals?	Yes	Replace the drum unit.
3	Drum unit connection failure	Are the electrodes on the drum unit and machine body dirty?	Yes	Clean both electrodes. (Refer to Fig. 1-2, Fig. 1-3.)
4	HVPS PCB failure	Is the problem solved after replacing the HVPS PCB ASSY?	Yes	Replace the HVPS PCB ASSY.
5	Main PCB failure	Is the problem solved after replacing the main PCB ASSY?	Yes	Replace the main PCB ASSY.

<Clean the drum unit as follows>

If you have print quality problems, clean the drum unit as follows:

(1) Put the print sample in front of the drum unit, and find the exact position of the poor print.

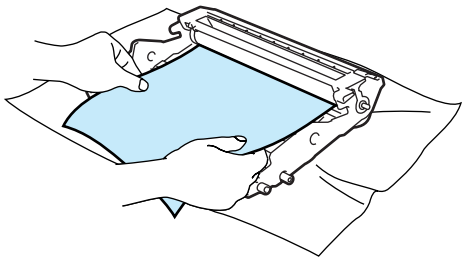

Fig. 1-9

(2) Turn the drum unit gear to the direction of the arrow of the figure by hand while looking at the surface of the exposure drum.

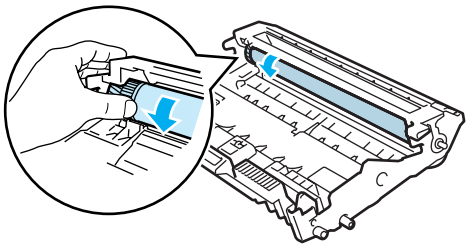

Fig. 1-10

(3) When you have found the mark on the drum that matches the print sample, wipe the surface of the exposure drum with a dry cotton swab until the dust or glue on the surface comes off.

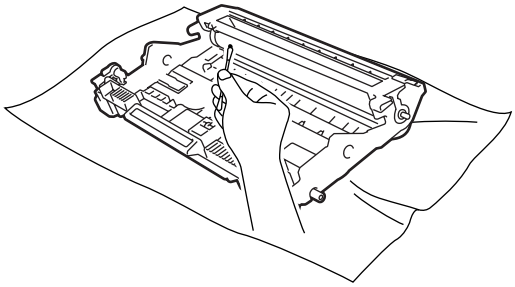

Fig. 1-11

CAUTION:

DO NOT clean the surface of the photosensitive drum with a sharp object.

■ Black spots

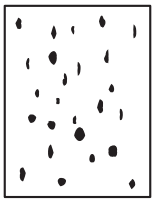

User Check

- Damp (wet) paper might be used. Try to change to freshly unpacked paper.
- Toner may be empty. Replace the toner cartridge with a new one.
- If the problem is not solved after printing a few pages, the drum unit may have glue from label stock on the exposure drum surface. Refer to the previous page, and wipe it off gently with a cotton swab.
- The drum unit may be damaged. Replace the drum unit with a new one.

Step	Cause	Check	Result	Remedy
1	Toner attached on the develop roller	Are the horizontal stripes at 40.6 mm (develop roller circumference) intervals?	Yes	This problem will disappear by printing approximate 10 pages. If the same problem occurs, replace the toner cartridge.
2	Scratch and Dirt on the exposure drum	Are the horizontal stripes at 75.0 mm (exposure drum circumference) intervals?	Yes	Replace the drum unit.
3	Drum unit connection failure	Are the electrodes on the drum unit and machine body dirty?	Yes	Clean both electrodes (Refer to Fig. 1-2, Fig. 1-3.)
4	Scratch and Dirt on the heat roller	Are the horizontal stripes at 78.5 mm (heat roller circumference) intervals?	Yes	Replace the fuser unit.
5	HVPS PCB failure	Is the problem solved after replacing the HVPS PCB ASSY?	Yes	Replace the HVPS PCB ASSY.
6	Main PCB failure	Is the problem solved after replacing the main PCB ASSY?	Yes	Replace the main PCB ASSY.

■ Black band

User Check

- Clean the inside of the machine and the corona wire in the drum unit. If the same problem occurs after cleaning, replace the drum unit with a new one.
- The paper tray ground terminal provided in the machine body may be dirty. Clean the contact with a dry cloth.

■ Downward fogging of solid color

User Check

- Toner may be empty. Replace the toner cartridge with a new one.

Step	Cause	Check	Result	Remedy
1	HVPS PCB failure	Is the problem solved after replacing the HVPS PCB ASSY?	Yes	Replace the HVPS PCB ASSY.
2	Main PCB failure	Is the problem solved after replacing the main PCB ASSY?	Yes	Replace the main PCB ASSY.

■ Horizontal lines

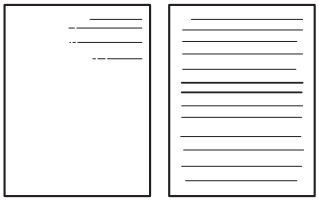

User Check

- The paper tray ground terminal provided in the machine body may be dirty. Clean the contact with a dry cloth.

Step	Cause	Check	Result	Remedy
1	Dirt on charged electrode	Are the electrodes on the drum unit and machine body dirty?	Yes	Clean both electrodes. (Refer to Fig. 1-2, Fig. 1-3.)
2	Paper tray ground terminal provided in machine body	Is the paper tray ground terminal bent, which is provided in the machine body?	Yes	Correct bending of paper tray ground terminal.
3	Laser unit failure	Is the problem solved after replacing the laser unit?	Yes	Replace the laser unit.

■ Ghost

User Check

- Check the machine's environment, conditions such as high or low humidity may cause this situation to occur.
- Check that the appropriate media type or size is selected in the printer driver.
- Replace the drum unit with a new one.

Step	Cause	Check	Result	Remedy
1	HVPS PCB failure	Is the problem solved after replacing the HVPS PCB ASSY?	Yes	Replace the HVPS PCB ASSY.
2	Main PCB failure	Is the problem solved after replacing the main PCB ASSY?	Yes	Replace the main PCB ASSY.

■ Fogging

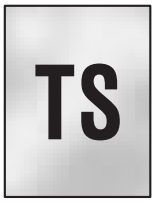

User Check

- Replace the toner cartridge with a new one.
- Replace the drum unit with a new one.
- Do not use acid paper.
- Check if there is dust or paper powder in the machine.

Step	Cause	Check	Result	Remedy
1	Toner sensor failure (Machine body)	Is the toner sensor performed normally by following the procedure in "Factory Inspection Mode" (Chapter 5).	No	Replace the toner sensor PCB unit ASSY and the toner LED PCB ASSY.
2	HVPS PCB failure	Is the problem solved after replacing the HVPS PCB ASSY?	Yes	Replace the HVPS PCB ASSY.
3	Main PCB failure	Is the problem solved after replacing the main PCB ASSY?	Yes	Replace the main PCB ASSY.

CAUTION:

This problem often occurs when the drum unit or toner cartridge is nearly at the end of life.

5. SOFTWARE SETTING PROBLEMS

The machine may not print the data correctly if there are incorrect software settings.

User Check

- Check that the USB cable and the network cable is not damaged or broken.
- Check that the correct machine is selected if you have an interface switching device.
- Check the descriptions on the software setting in the user's guide.
- Try resetting the factory settings.

Step	Cause	Check	Result	Remedy
1	Failure inside the machine	Does the machine print "Printer Settings" ? (Refer to "1.3 Service Mode" in Chapter 5.)	No	Identify the error type, and then refer to the specified section of this chapter.
2	Machine connection	For Macintosh, has the product ID been verified?	No	Verify the product ID.Product ID: HL-2140: 0033* HL-2150N: 0034* HL-2170W: 0035* * Hexadecimal
3	Main PCB failure	Is the problem solved after replacing the main PCB ASSY?	Yes	Replace the main PCB ASSY.

6. NETWORK PROBLEMS

User Check

- Check the descriptions in the network user's guide.
- Try resetting the factory settings.

Step	Cause	Check	Result	Remedy
1	Wireless LAN PCB failure (HL-2170W)	Is the problem solved after replacing the wireless LAN PCB ASSY?	Yes	Replace the wireless LAN PCB ASSY.
2	Main PCB failure	Is the problem solved after replacing the main PCB ASSY?	Yes	Replace the main PCB ASSY.

7. OTHERS PROBLEMS

■ The machine is not turned on, or the LED indication does not appear.

Step	Cause	Check	Result	Remedy
1	Harness connection failure of panel PCB	Is the harness of the panel PCB ASSY connected correctly?	No	Reconnect the panel PCB ASSY harness.
2	Panel PCB failure	Is the problem solved after replacing the panel PCB ASSY?	Yes	Replace the panel PCB ASSY.
3	LVPS PCB failure	Is the problem solved after replacing the PS PCB unit?	Yes	Replace the PS PCB unit.
4	Main PCB failure	Is the problem solved after replacing the main PCB ASSY?	Yes	Replace the main PCB ASSY.

■ The fan does not work.

Step	Cause	Check	Result	Remedy
1	Harness connection failure of the fan motor 60 ASSY.	Is the harness of the fan motor 60 ASSY connected correctly?	No	Reconnect the harness of the fan motor 60 ASSY correctly.
2	Toner LED PCB ASSY failure	Is the problem solved after replacing the toner LED PCB ASSY?	Yes	Replace the toner LED PCB ASSY.
3	Main PCB failure	Is the problem solved after replacing the main PCB ASSY?	Yes	Replace the main PCB ASSY.

■ Pickup function of paper tray does not work.

Step	Cause	Remedy
1	Link arm does not operate smoothly or keeps catching.	Check whether the link arm operates correctly.
2	Pickup roller holder ASSY does not operate smoothly or keeps catching.	Check whether the pickup roller holder ASSY operates correctly.
3	Roller holder ASSY failure	Replace the roller holder ASSY.
4	Main motor failure	Replace the main motor.
5	Main PCB failure	Replace the main PCB ASSY.

■ A new toner cannot be detected.

Step	Cause	Remedy
1	New toner actuator does not operate smoothly or keeps catching.	Check whether the new toner actuator operates correctly.
2	New toner actuator is damaged.	Replace the new toner actuator.
3	Main PCB failure	Replace the main PCB ASSY.
4	New toner sensor harness ASSY failure	Replace the new toner sensor harness ASSY.

CHAPTER 2 PERIODICAL MAINTENANCE

To avoid creating secondary problems by mishandling, follow the warnings below during maintenance work.

WARNING

- Always turn off the power switch and unplug the power cord from the power outlet before accessing any parts inside the machine.
- When opening the front cover or back cover to access any parts inside the machine, never touch the shaded parts shown in the following figures.
- DO NOT use flammable substances such as alcohol, benzine, thinner or any type of spray to clean the inside or outside of the machine. Doing this may cause a fire or electrical shock.

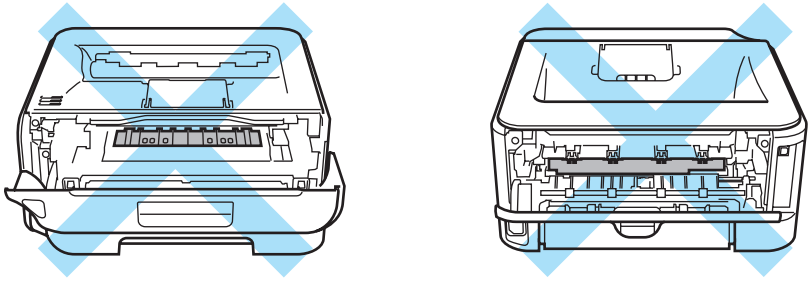

1. CONSUMABLE PARTS

The consumable parts described in this section are parts which are subject to deterioration or damage and should be replaced at least once during the period of warranty of the product if any printing quality problem appears.

Parts Name		Approximate Life
Toner Cartridge	Starter cartridge	Approx. 1,000 pages A4/Letter pages *1
	Standard cartridge	Approx. 1,500 pages A4/Letter pages *1
	High yield cartridge	Approx. 2,600 pages A4/Letter pages *1
Drum Unit		Approx. 12,000 pages A4/Letter pages (1 page/job)

*1 Approx. cartridge yield is declared in accordance with ISO/IEC 19752. (Letter/A4)

2. PERIODICAL PEPLACEMENT PARTS

There are no parts to be replaced periodically.

Confidential

CHAPTER 3 DISASSEMBLY AND ASSEMBLY

1. SAFETY PRECAUTIONS

To avoid creating secondary problems by mishandling, follow the warnings and precautions below during maintenance work.

WARNING

- Always turn off the power switch and unplug the power cord from the power outlet before accessing any parts inside the machine.
- When opening the front cover or back cover to access any parts inside the machine, never touch the shaded parts shown in the following figures.
- DO NOT use flammable substances such as alcohol, benzine, thinner or any type of spray to clean the inside or outside of the machine. Doing this may cause a fire or electrical shock.

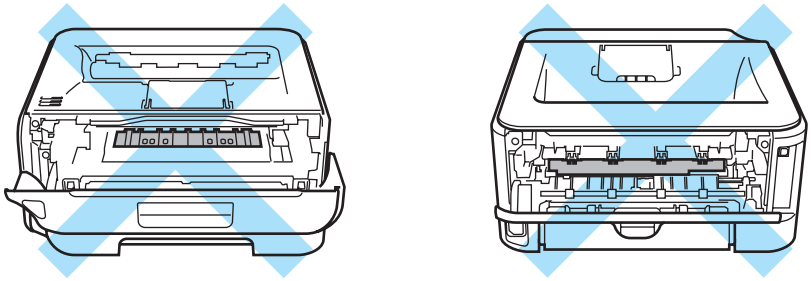

- Be careful not to lose screws, washers, or other parts removed.
- Be sure to apply grease to the gears and applicable positions specified in this chapter.
- When using soldering irons or other heat-generating tools, take care not to accidentally damage parts such as wires, PCBs and covers.
- Static electricity charged in your body may damage electronic parts. When transporting PCBs, be sure to wrap them in conductive sheets.
- When replacing the PCB and all the other related parts, put on a grounding wrist band and perform the job on a static mat. Also take care not to touch the conductor sections on the flat cables or on the wire harness.
- When connecting or disconnecting cable connectors, hold the connector body, not the cables. If the connector has a lock, release the connector lock first to release it.
- After a repair, check not only the repaired portion but also all connectors. Also check that other related portions are functioning properly before operational checks.
- After disconnecting flat cables, check that each cable is not damaged at its end or short-circuited.
- When connecting flat cables, do not insert them at an angle. After insertion, check that the cables are not at an angle.

2. PACKING

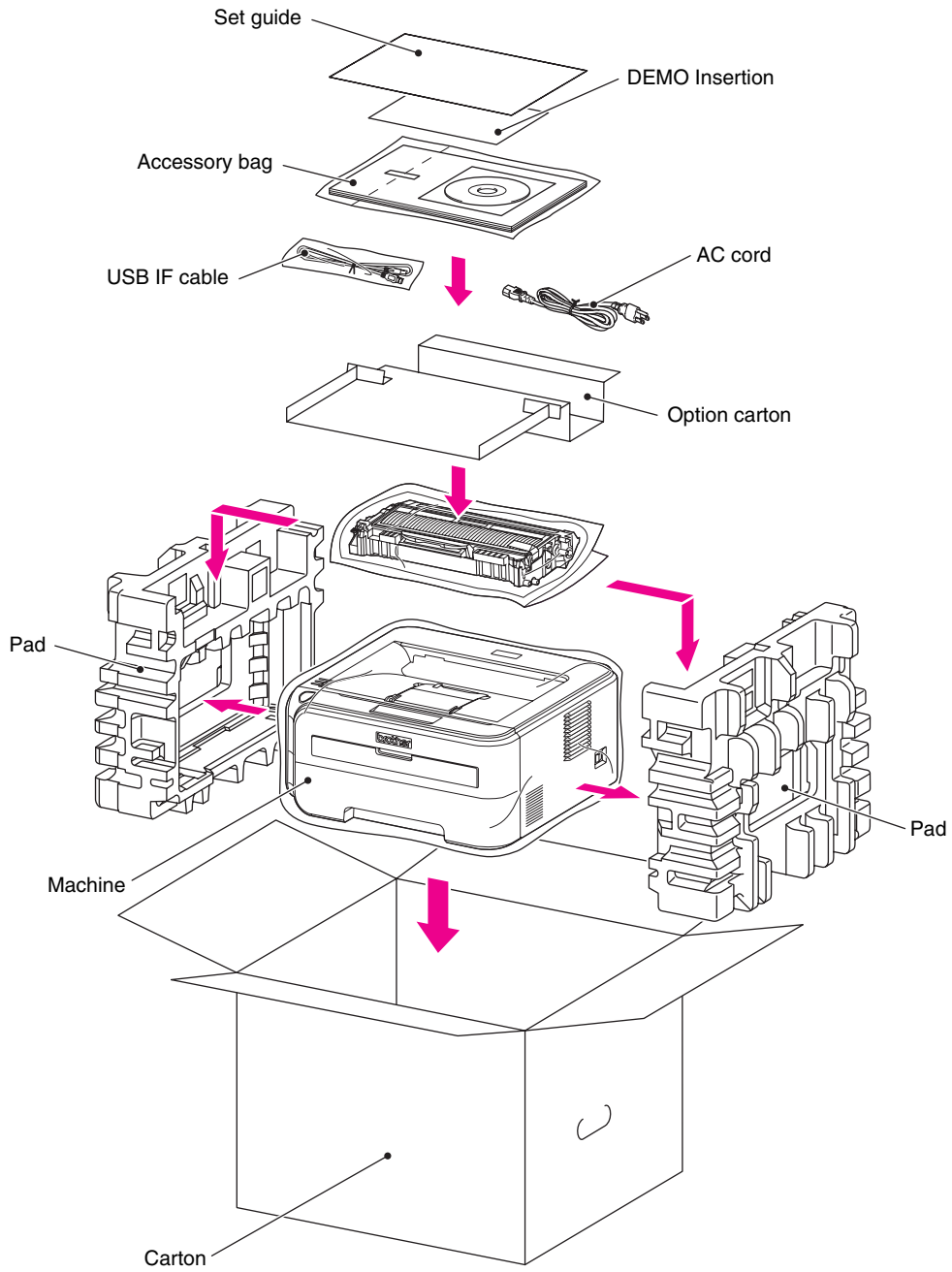

Fig. 3-1

3. SCREW TORQUE LIST

Location of screw	Screw type	Q'ty	Tightening torque N m (kgf · cm)
KEY STOPPER	Taptite cup B M3x8	2	0.4±0.05 (4±0.5)
INNER CHUTE ASSY	Taptite bind B M4x12	2	0.6±0.1 (6±1)
FUSER UNIT	Taptite pan B M4x14	2	0.8±0.1 (8±1)
SIDE COVER R ASSY	Taptite bind B M4x12	2	0.8±0.1 (8±1)
CORNER COVER	Taptite bind B M4x12	1	0.8±0.1 (8±1)
SIDE COVER L ASSY	Taptite bind B M4x12	2	0.8±0.1 (8±1)
MAIN SHIELD COVER PLATE	Taptite cup S M3x6 SR	2	0.55±0.05 (5.5±0.5) Left side
	Taptite cup S M3x6 SR	1	0.9±0.05 (9±0.5) Right side
MAIN PCB ASSY	Taptite cup S M3x6 SR	4(5)*	0.6±0.1 (6±1)
TOP COVER ASSY	Taptite bind B M4x12	2	0.8±0.1 (8±1)
PANEL PCB ASSY	Taptite cup B M3x8	1	0.5±0.1 (5±1)
HIGH-VOLTAGE PS PCB ASSY	Taptite cup S M3x6 SR	2	0.8±0.05 (8±0.5)
	Taptite bind B M4x12	2	0.8±0.05 (8±0.5)
LASER UNIT	Taptite cup S M3x6 SR	4(2)*	0.8±0.05 (8±0.5) Left side of Main frame
	Taptite pan (S/P washer) S M3x8	0(2)*	0.8±0.05 (8±0.5) Right side of Main frame
AIR DUCT	Taptite cup S M3x6 SR	2	0.9±0.05 (9±0.5)
LV SHIELD PLATE COVER	Screw pan (S/P washer) M3.5x6	1	0.5±0.05 (5±0.5)
	Taptite cup S M3x6 SR	2	0.5±0.05 (5±0.5)
SW HOLDER	Taptite bind B M4x12	1	0.8±0.1 (8±1)
INLET HARNESS ASSY	Screw pan (S/P washer) M3.5x6	1	0.5±0.05 (5±0.5)
	Taptite flat B M3x10	2	0.45±0.05 (4.5±0.5)
PS PCB UNIT	Taptite cup S M3x6 SR	2	0.5±0.05 (5±0.5)
LV SHIELD PLATE 2	Taptite bind B M4x12	2	0.8±0.1 (8±1)
	Taptite cup S M3x6 SR	1	0.6±0.1 (6±1) Back Side
	Taptite cup S M3x6 SR	1	0.5±0.05 (5±0.5) Front chute ground plate side
ACTUATOR HOLDER ASSY	Taptite bind B M3x10	2	0.5±0.1 (5±1)
REGISTRATION FRONT SENSOR PCB ASSY	Taptite bind B M3x10	1	0.5±0.1 (5±1)
REAR ACTUATOR HOLDER ASSY	Taptite bind B M3x10	2	0.5±0.1 (5±1)
REGISTRATION REAR SENSOR PCB ASSY	Taptite bind B M3x10	1	0.5±0.1 (5±1)

Location of screw	Screw type	Q'ty	Tightening torque N m (kgf · cm)
UNDER FG WIRE	Taptite bind B M4x12	1	0.8±0.1 (8±1)
	Taptite cup S M3x6 SR	1	0.8±0.05 (8±0.5)
DRIVE SUB ASSY	Taptite cup S M3x6 SR	1	0.6±0.1 (6±1)
	Taptite bind B M4x12	9	0.8±0.1 (8±1)
NEW TONER SENSOR HARNESS ASSY	Taptite bind B M3x10	1	0.5±0.1 (5±1)
REGISTRATION SOLENOID	Taptite bind B M3x10	1	0.5±0.1 (5±1)
T1 SOLENOID	Taptite bind B M3x10	1	0.5±0.1 (5±1)
FU FRONT PLATE GUIDE	Taptite bind B M3x10	3	0.5±0.1 (5±1)
CHUTE GROUND PLATE	Taptite cup S M3x6 SR	2	0.6±0.1 (6±1)
MAIN SHIELD PLATE	Taptite bind B M4x12	3	0.8±0.1 (8±1)
MAIN FRAME L ASSY	Taptite bind B M4x12	4	0.8±0.1 (8±1)
	Taptite cup S M3x6 SR	2	0.7±0.1 (7±1)

* The parenthesis shows the number of screws for HL-2150N/2170W.

4. LUBRICATION

The kind of the lubricating oil (Maker name)	Lubrication point	Quantity of labrication
BG-MU (Kanto Kasei)	Dev gear joint/53R Drive sub ASSY Drum gear 25L/139L	2mm dia. ball BG2
MOLYKOTE EM-D110 (Dow Corning Toray)	Separation pad ASSY	2mm dia. ball EM2

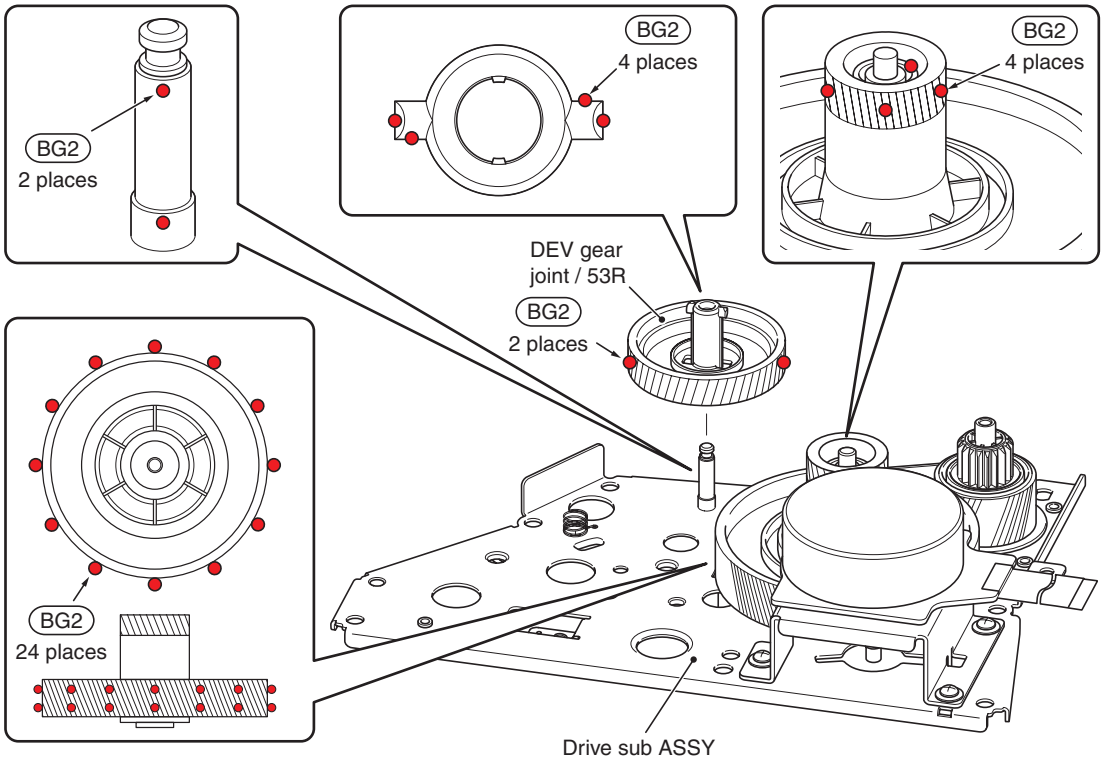

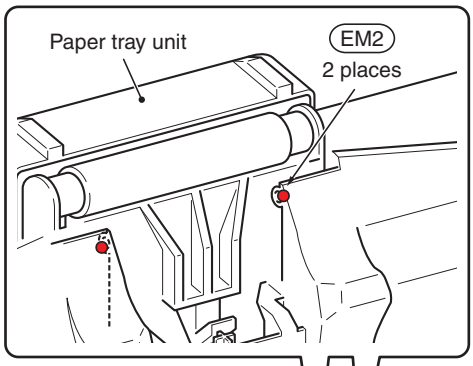

CAUTION:

Be careful not to put lubricants on the surface through which papers are fed.

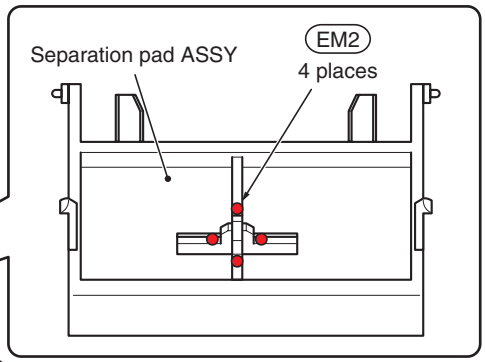

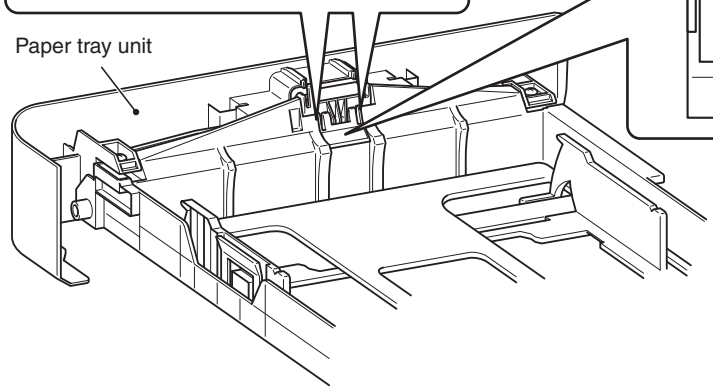

CAUTION:

Be careful not to let lubricants touch the opposite side of the Separation pad ASSY.

5. OVERVIEW OF GEARS

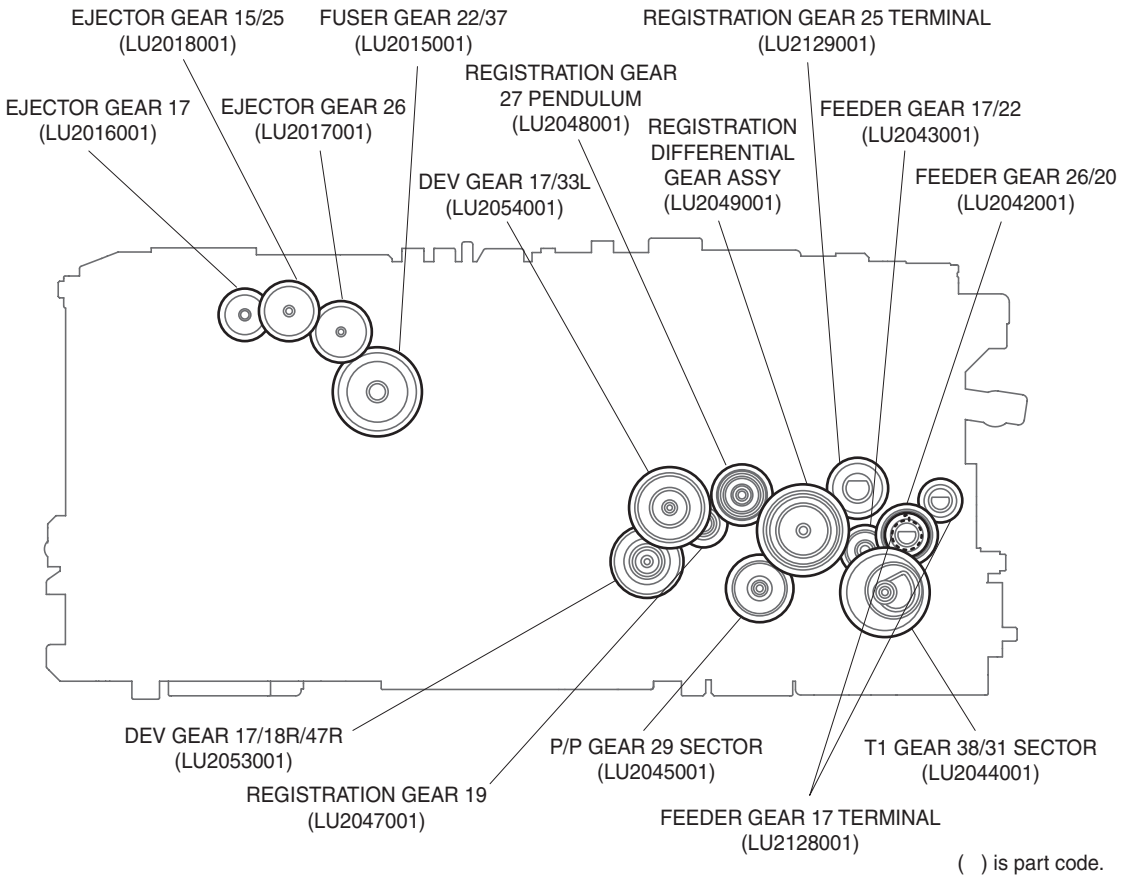

Fig. 3-2

CAUTION:

The part codes of gears are subject to change without notice.

6. HARNESS ROUTING

1 FUSER UNIT

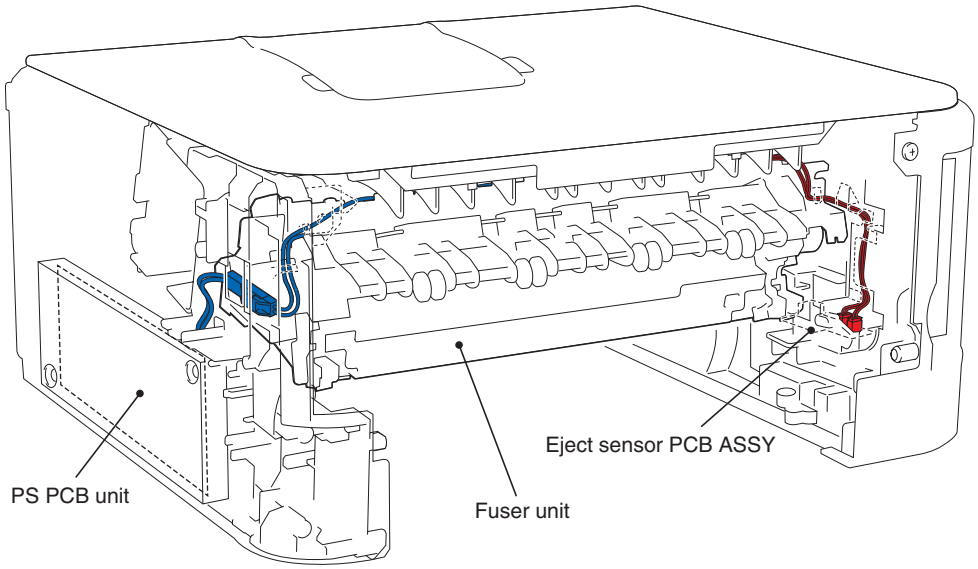

2 FG HARNESS

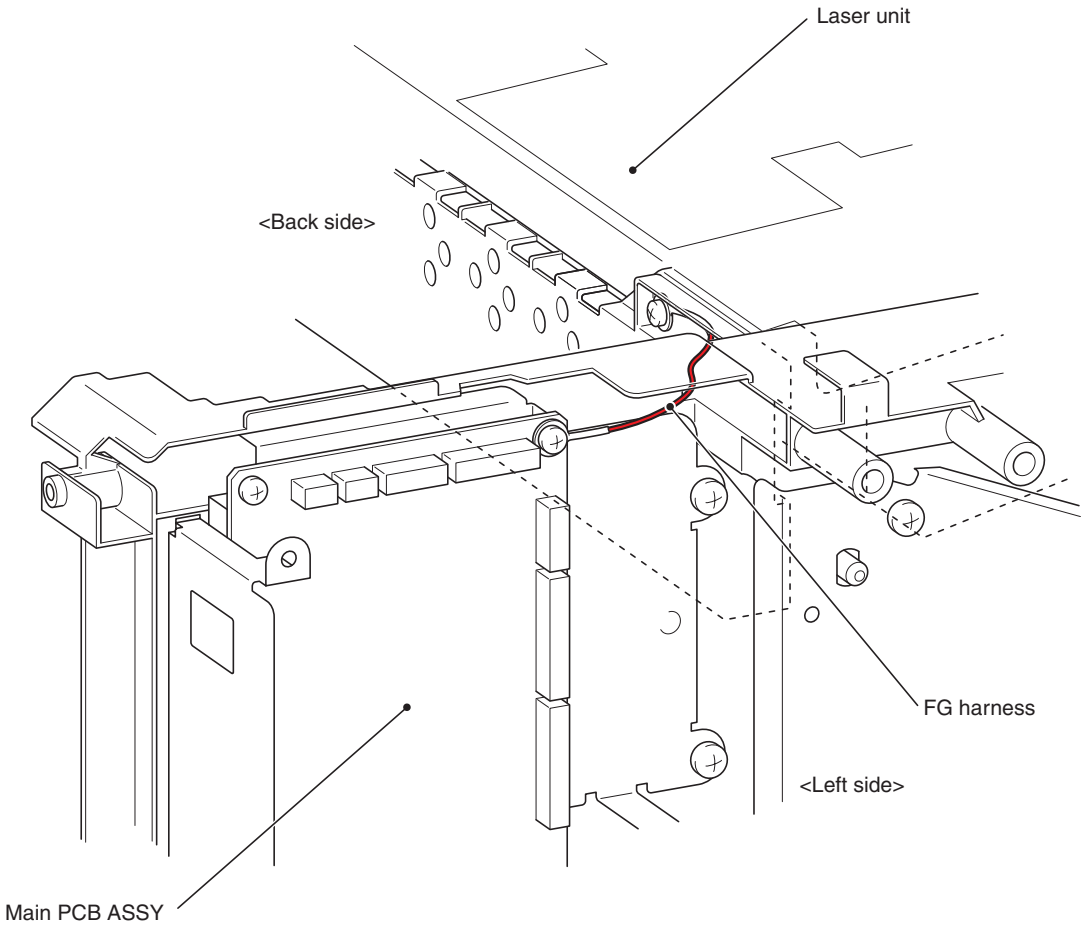

Confidential

3 MAIN FRAME R ASSY

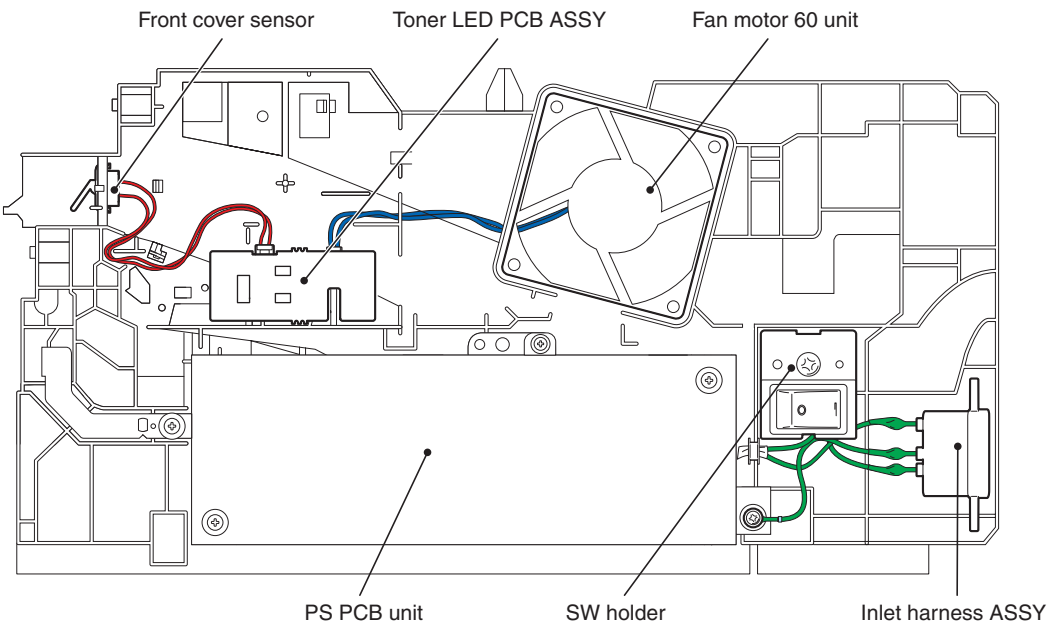

4 WIRELESS LAN PCB ASSY (only HL-2170W) / TONER LED PCB ASSY / PS PCB UNIT / MAIN PCB ASSY/ REGISTRATION FRONT SENSOR PCB ASSY / REGISTRATION REAR SENSOR PCB ASSY

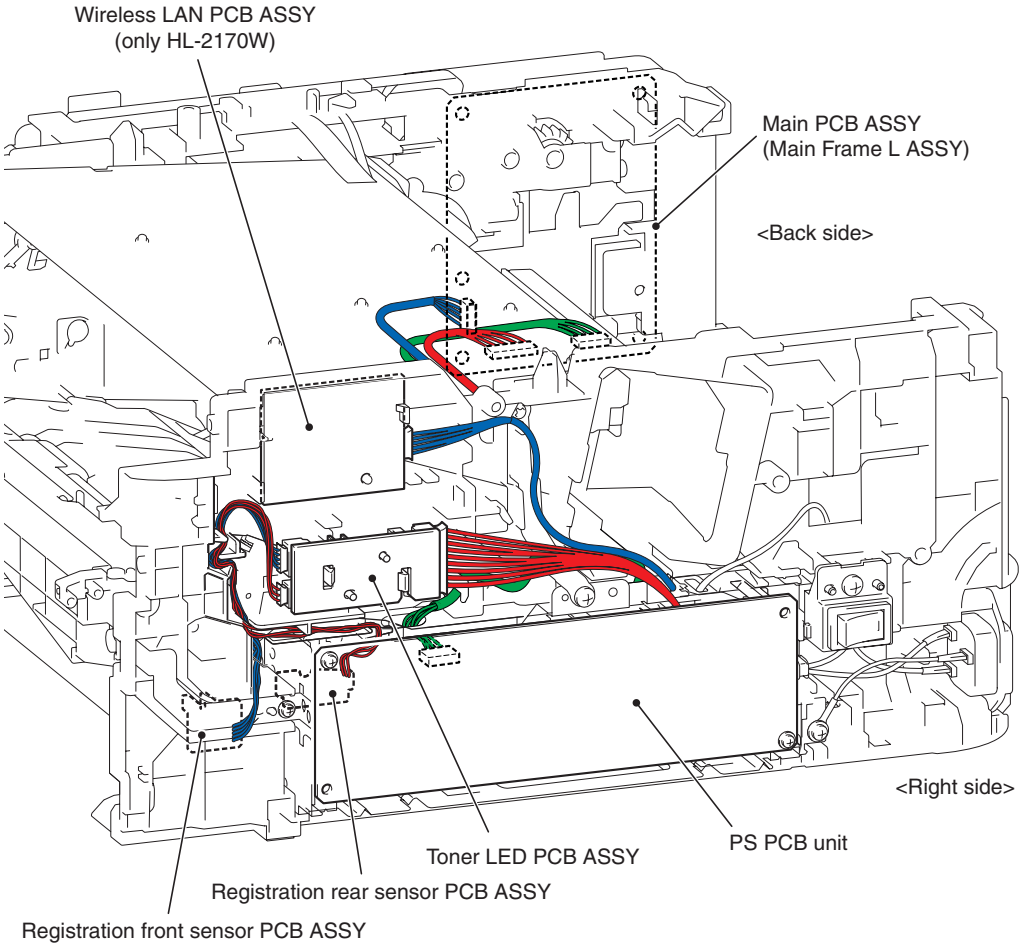

Confidential

5	PANEL PCB ASSY / TONER SENSOR PCB UNIT ASSY / NEW TONER SENSOR HARNESS ASSY

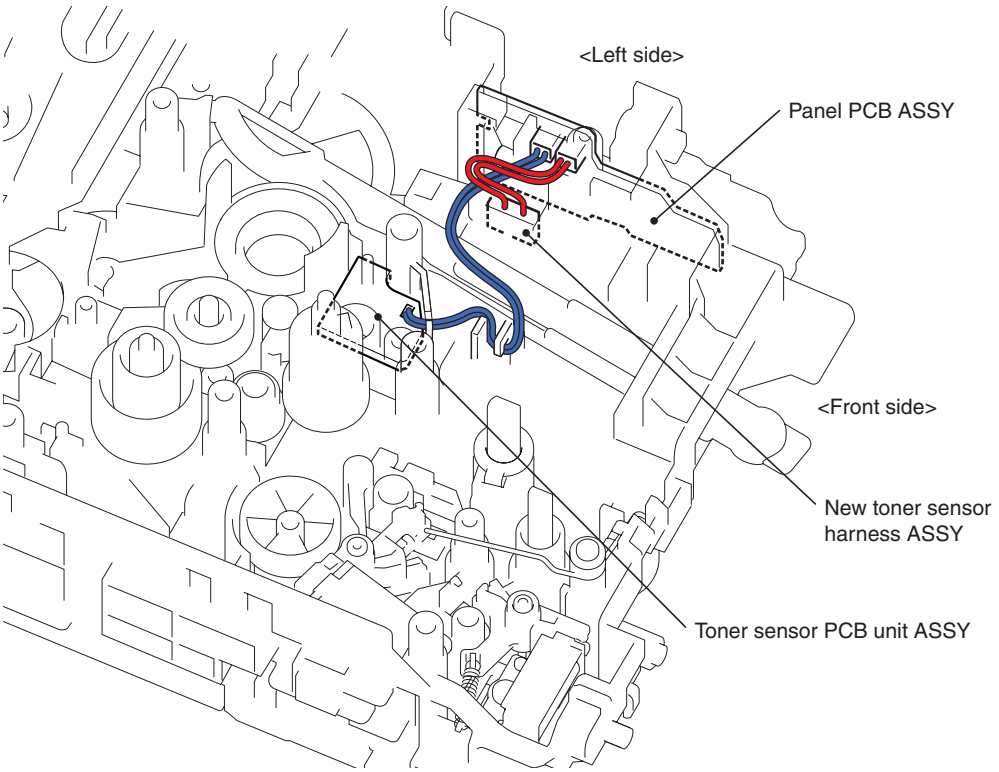

6 HIGH-VOLTAGE PS PCB / REGISTRATION SOLENOID / T1 SOLENOID

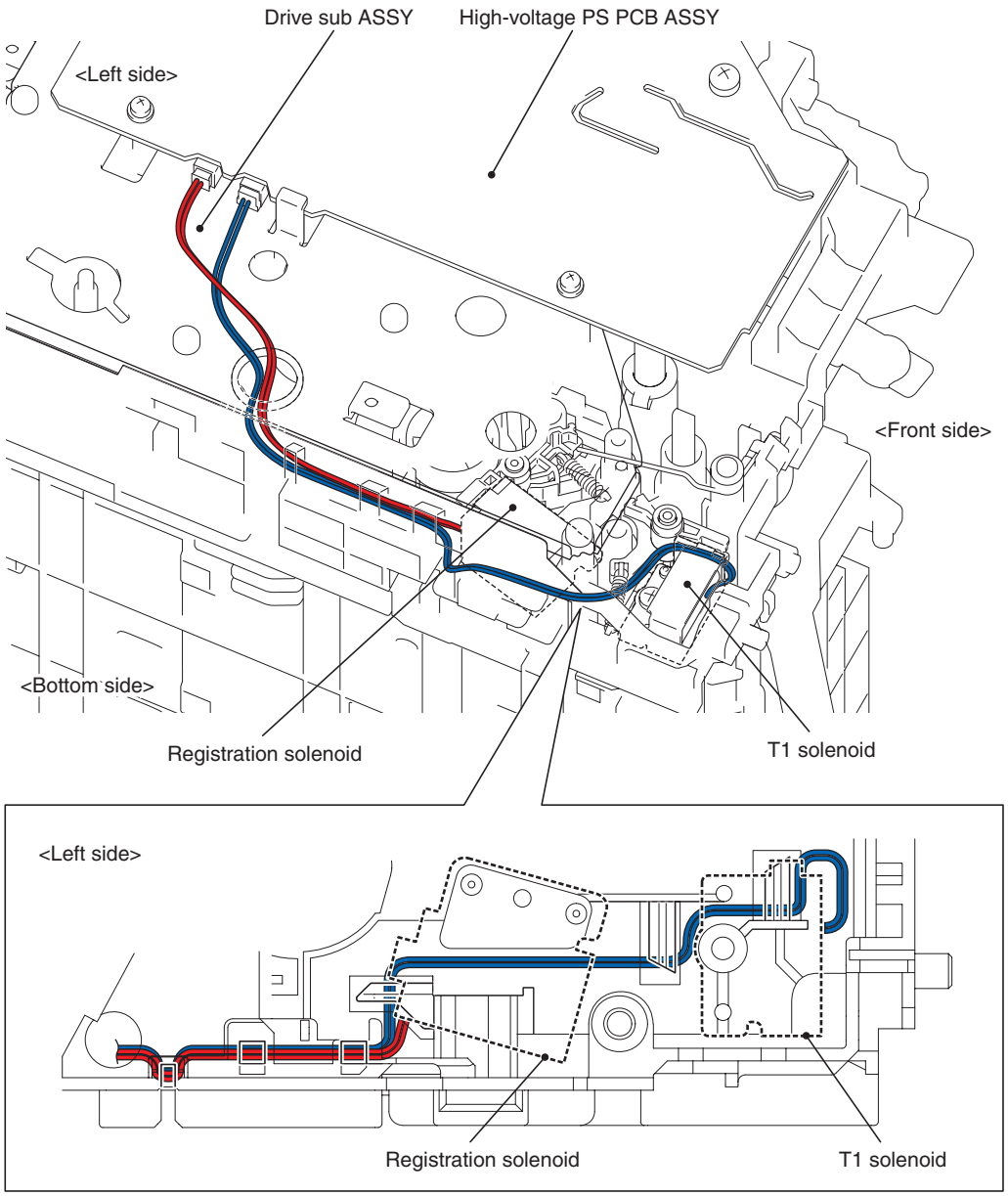

Confidential

7. DISASSEMBLY FLOW

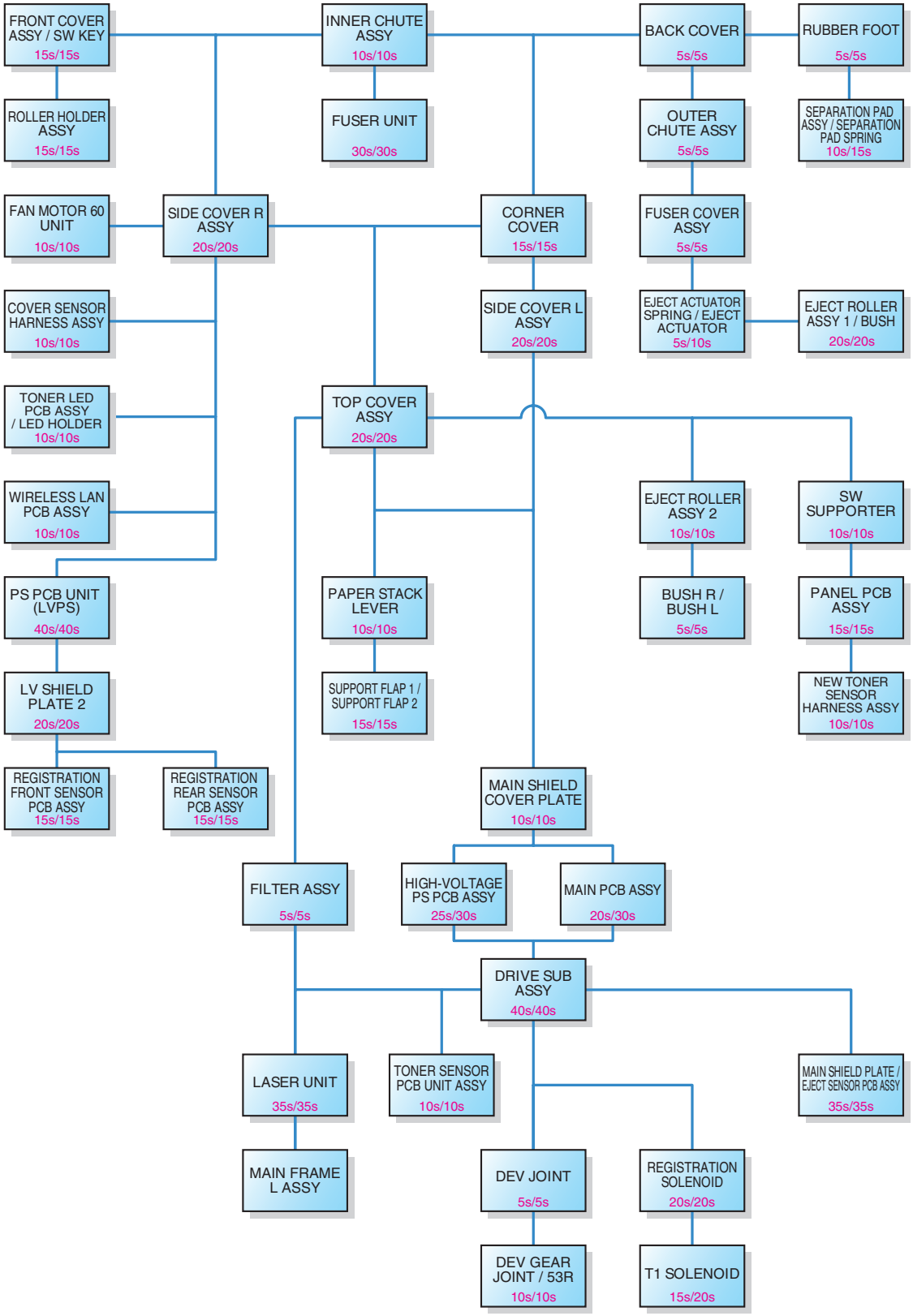

Fig. 3-3

8. DISASSEMBLY PROCEDURE

8.1 PAPER TRAY UNIT / SEPARATION PAD ASSY

(1) Pull out the Paper tray unit from the Main body.

(2) Lift up the Separation pad ASSY.

(3) Release the Boss to remove the Separation pad ASSY from the Paper tray unit.

(4) Remove the Separation pad spring from the Paper tray unit.

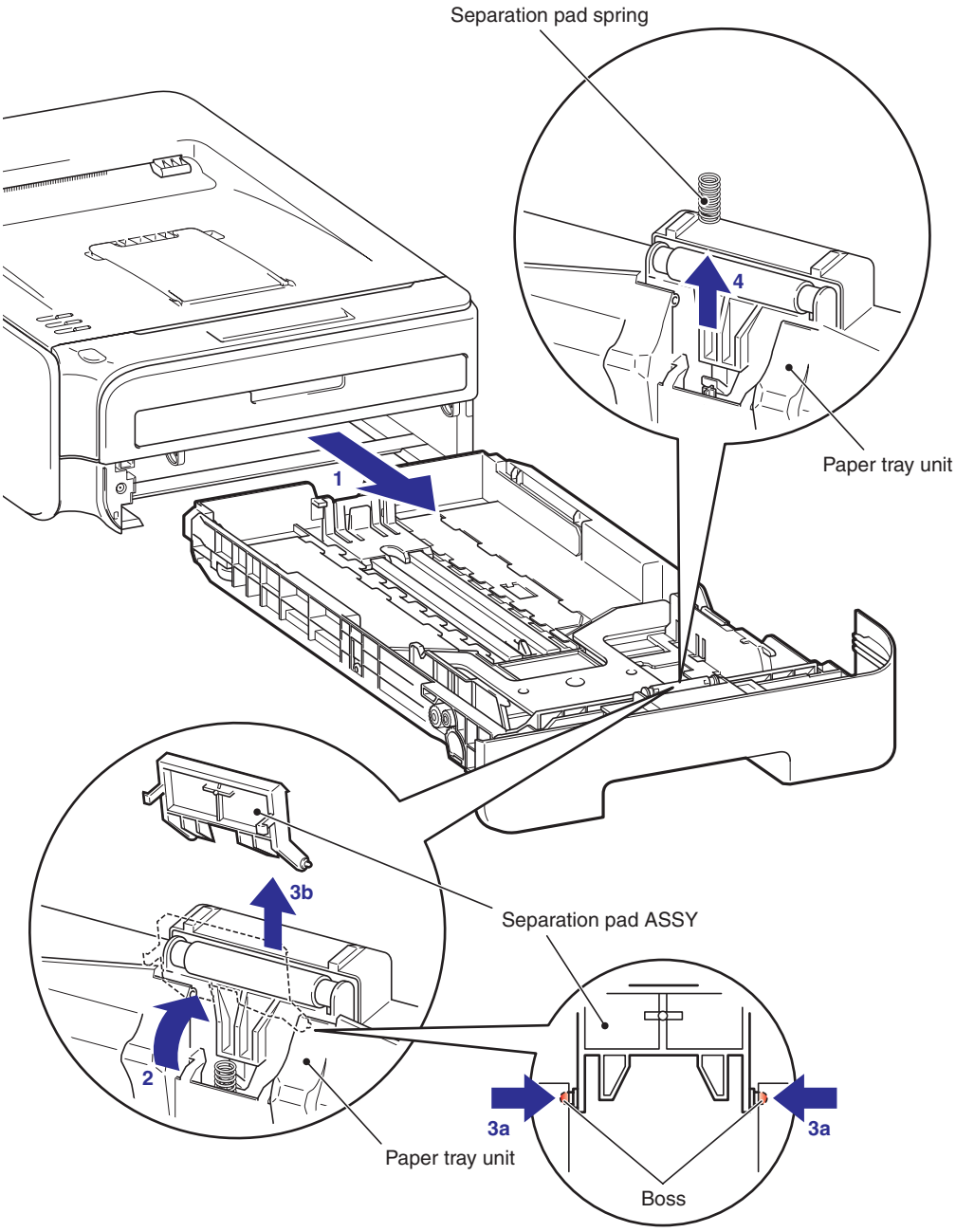

Fig. 3-4

Confidential

8.2 FRONT COVER ASSY / SW KEY

8.2.1 FRONT COVER ASSY

(1) Open the Front cover ASSY.

(2) Release the Hook to remove the DEV joint link from the Front cover ASSY.

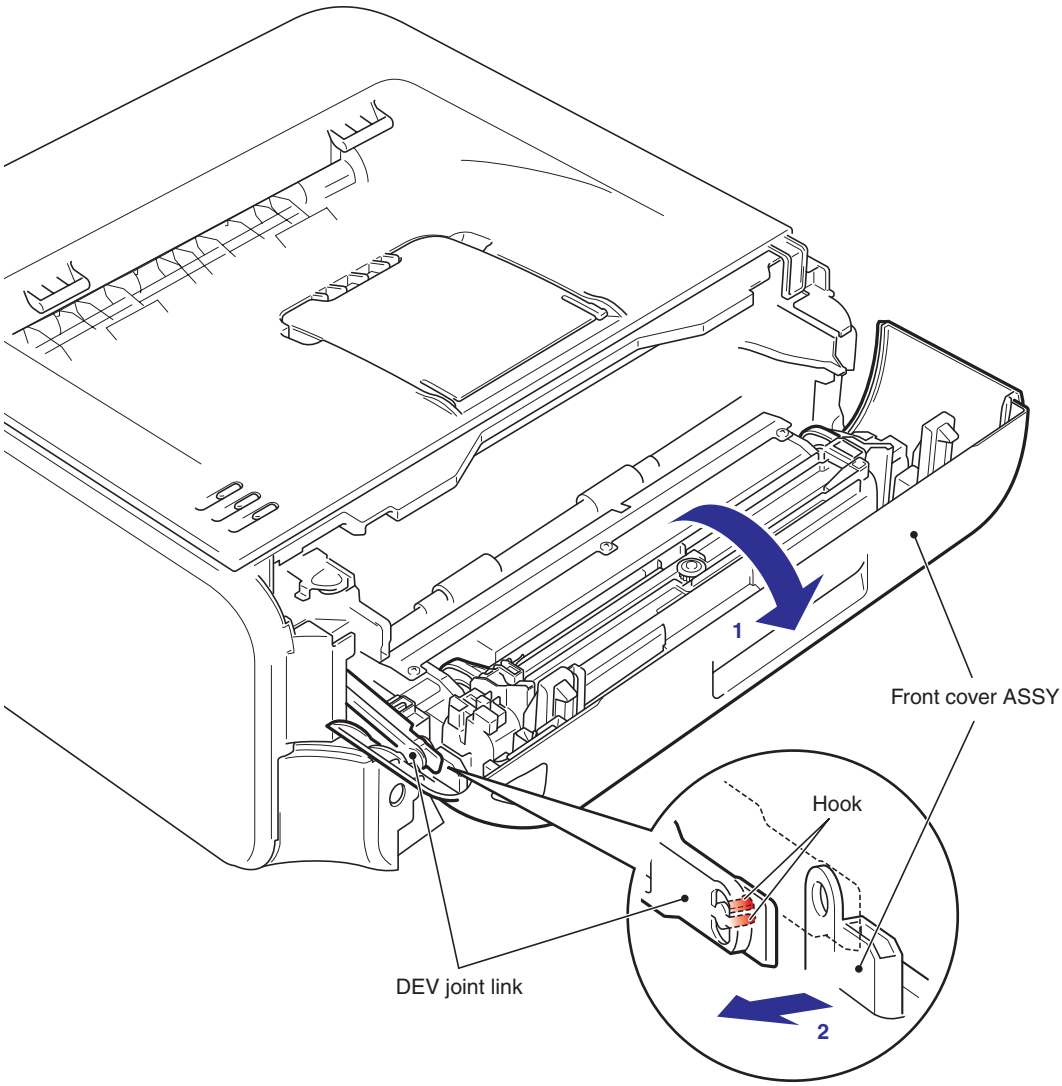

Fig. 3-5

Confidential

(3) Release the Hook of the Front cover ASSY from the Front cover top.

(4) Remove the Boss of the Front chute ASSY, and then remove the Front cover ASSY from the Main body.

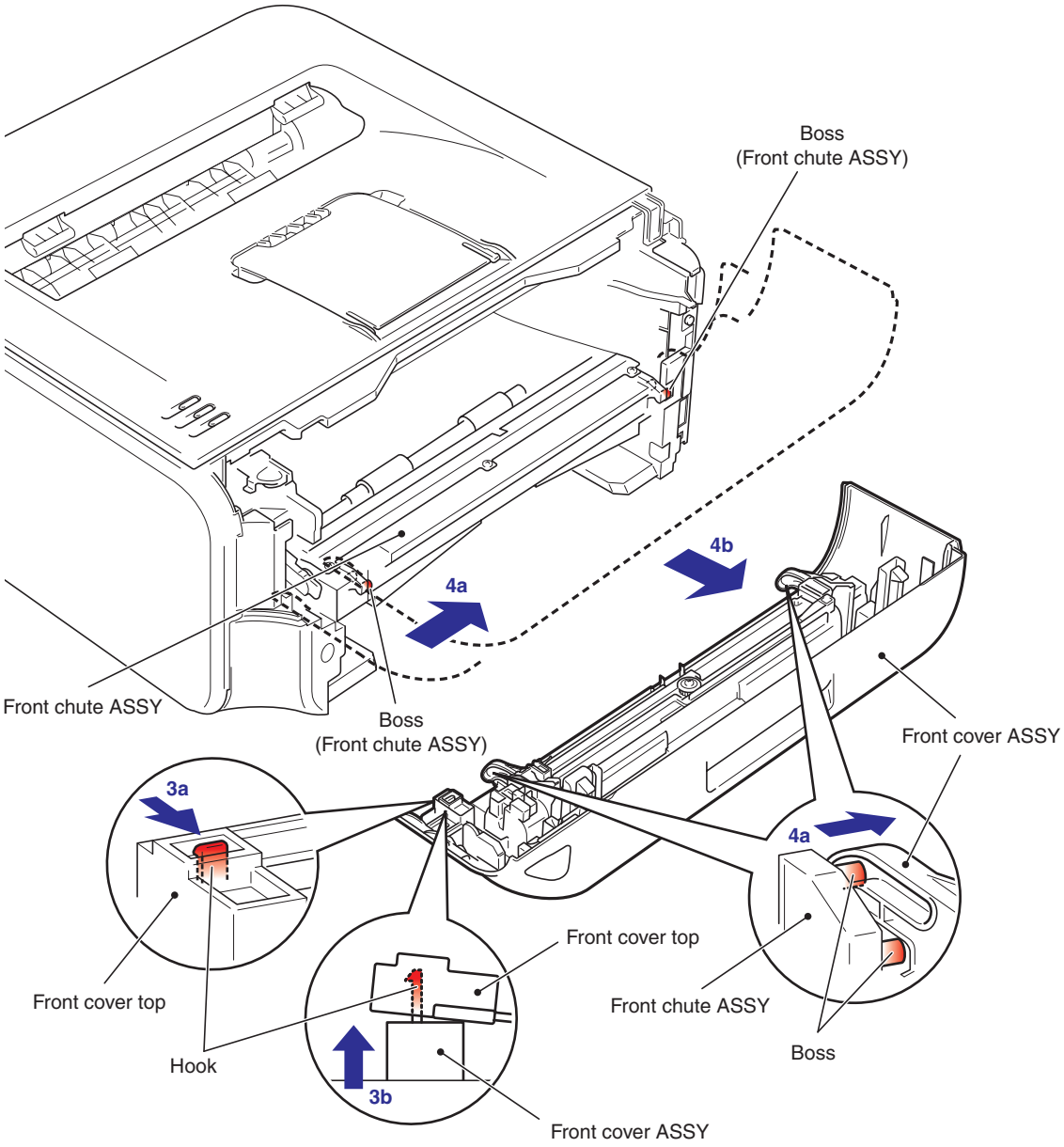

Fig. 3-6

8.2.2 SW KEY

(1) Remove the two Taptite cup B M3x8 screws, and then remove the Key stopper from the Front cover ASSY.

(2) Remove the SW key from the Front cover ASSY.

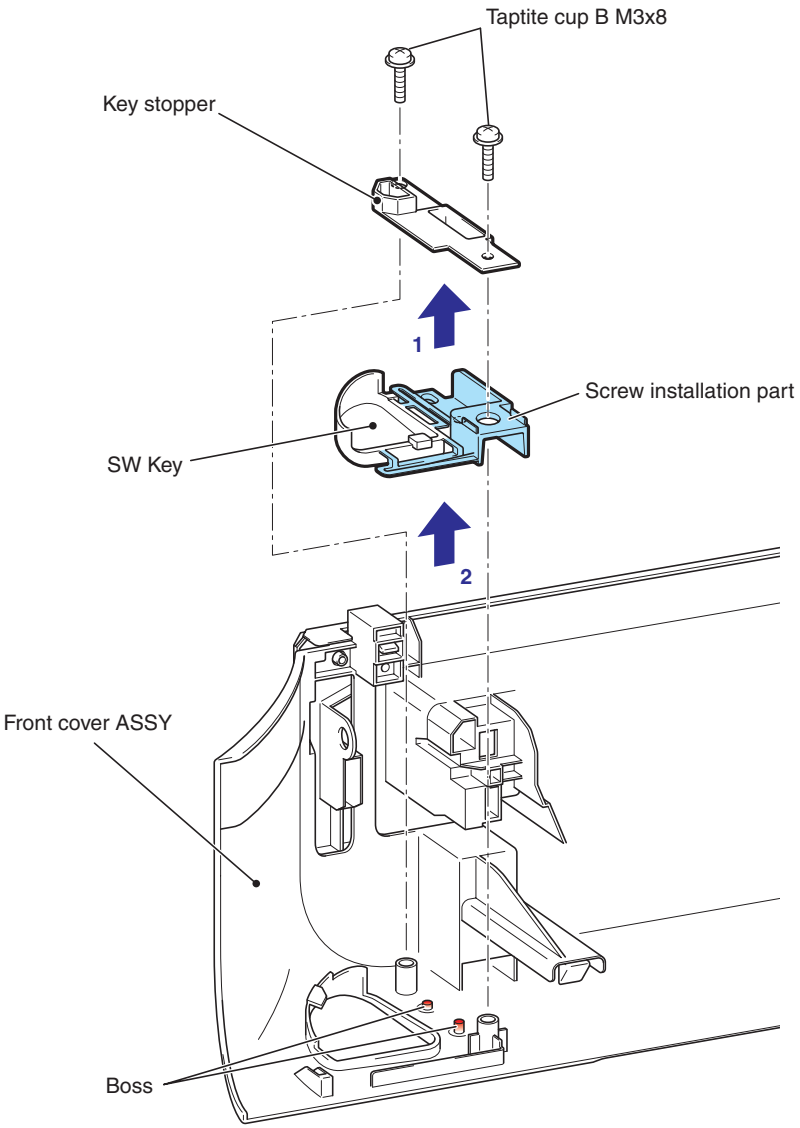

Fig. 3-7

CAUTION:

When operate while having the screw installation part of the SW key, be careful not to damage it.

Assembling Note:

When operate while having the Screw installation part of the SW key, be careful not to damage it.

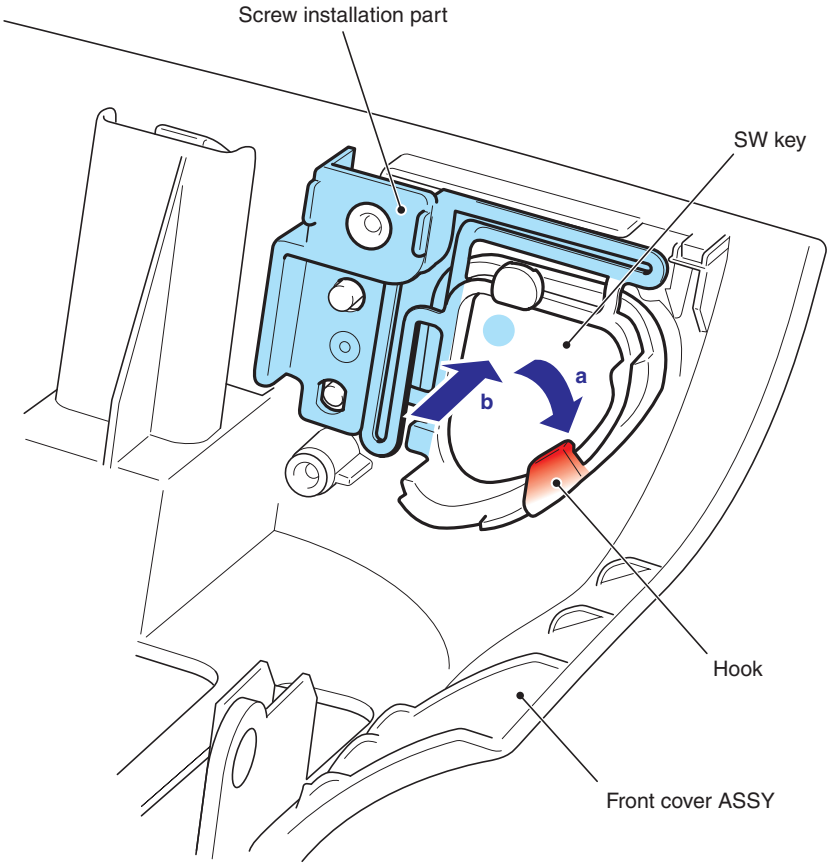

Fig. 3-8

8.3 BACK COVER / OUTER CHUTE ASSY

8.3.1 BACK COVER

(1) Open the Back cover.

(2) Release the Boss of the Outer chute ASSY from the Back cover.

(3) Release the Hook from the Side cover R ASSY.

(4) Slide the Back cover from the Main body, and remove it.

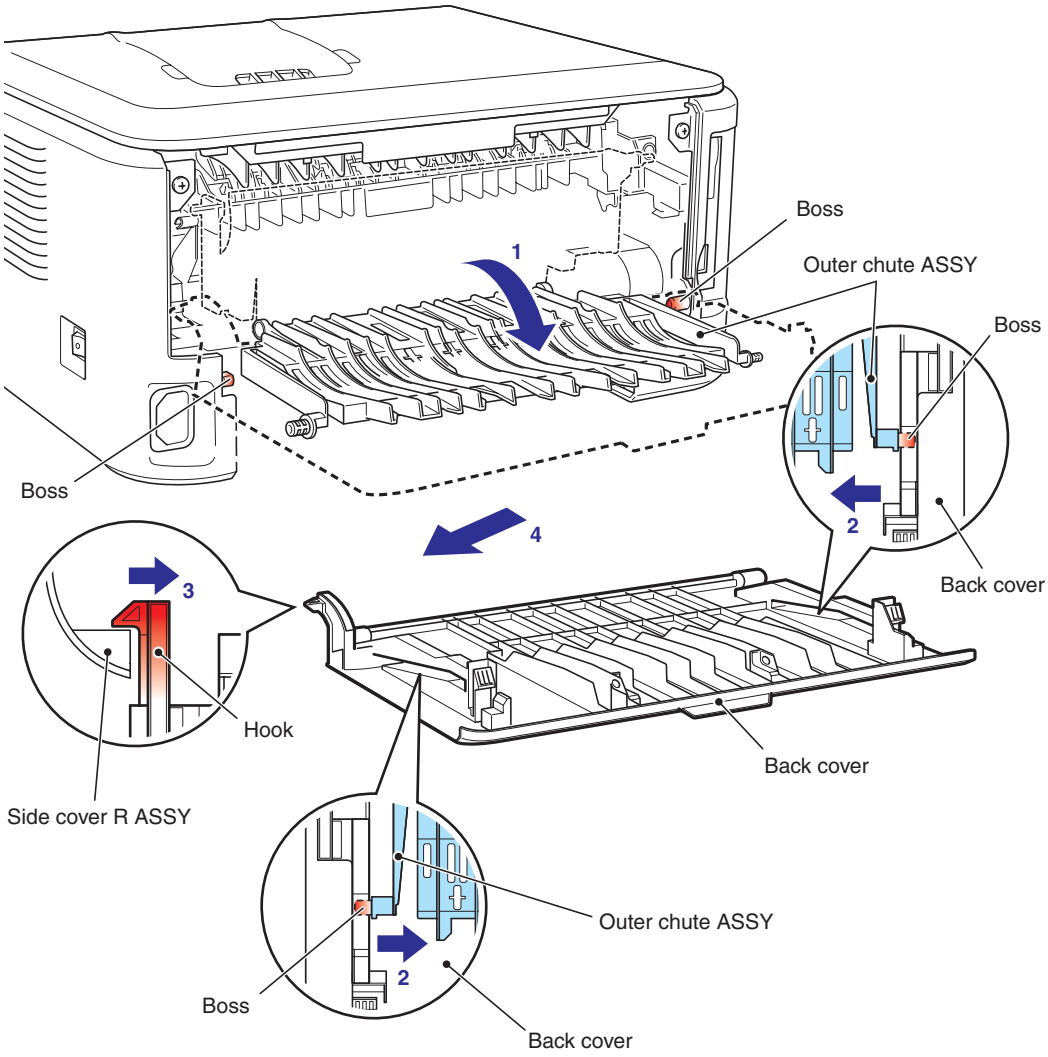

Fig. 3-9

Confidential

8.3.2 OUTER CHUTE ASSY

(1) Release the Boss to remove the Outer chute ASSY from the Main body.

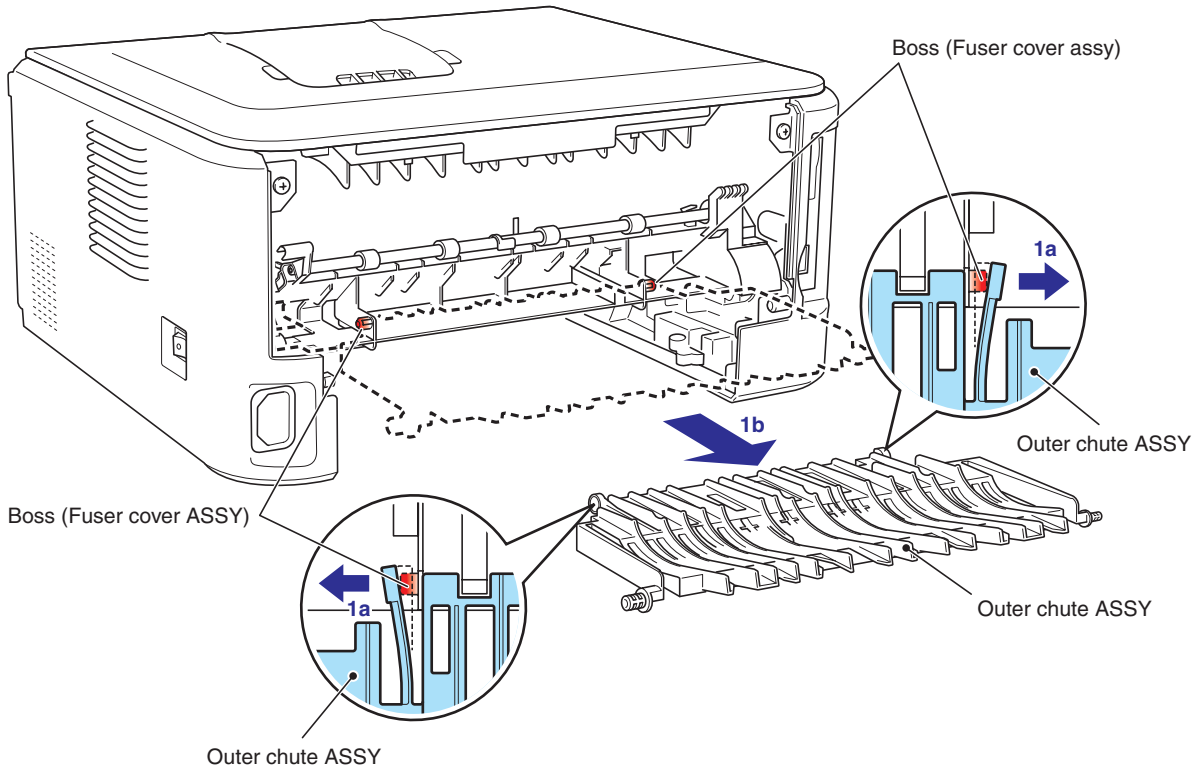

Fig. 3-10

Confidential

8.4 FUSER COVER ASSY

8.4.1 FUSER COVER ASSY

(1) Take down the Fuser cover ASSY.

(2) Remove the Fuser cover ASSY from the Main body.

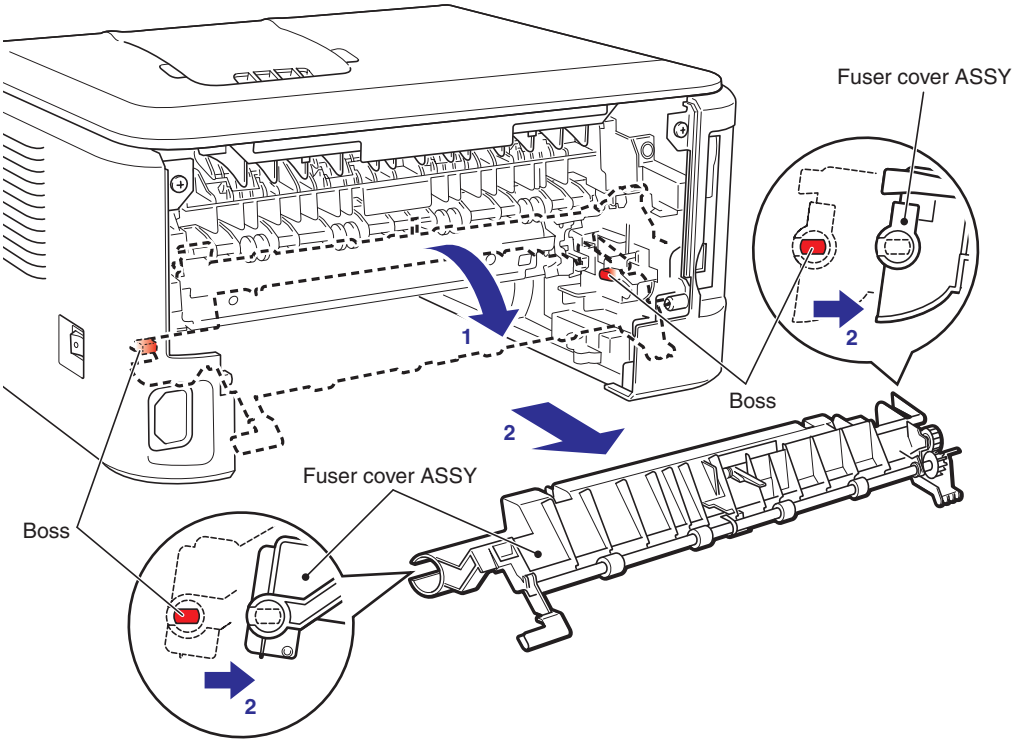

Fig. 3-11

Confidential

8.4.2 EJECT ACTUATOR / EJECT ACTUATOR SPRING

(1) Release the Hook to slide the Eject actuator, and then remove the Eject actuator from the Fuser cover ASSY.

(2) Remove the Eject actuator spring from the Eject actuator.

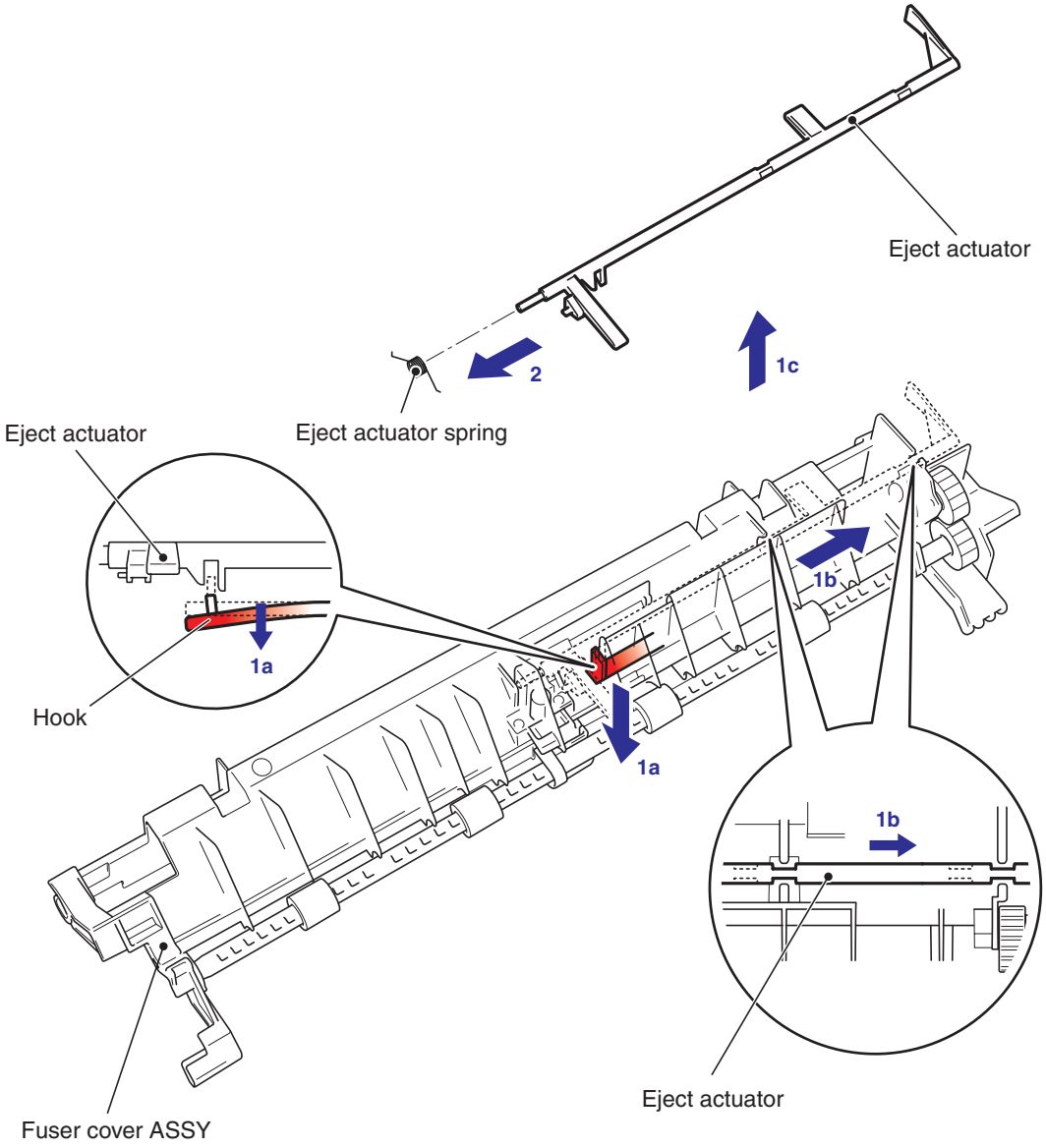

Fig. 3-12

8.4.3 EJECT ROLLER ASSY 1 / BUSH C / BUSH R / BUSH L

(1) Release the Hook of the Bush C from the Fuser cover ASSY.

(2) Remove the Eject roller ASSY 1 from the Fuser cover ASSY.

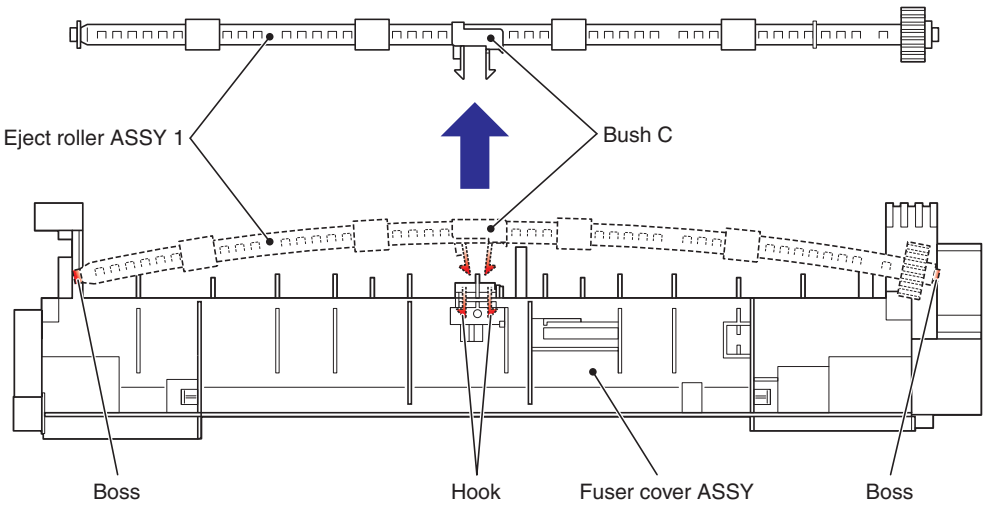

Fig. 3-13

(3) Remove the Bush C, the Bush R and the Bush L from the Eject roller ASSY 1.

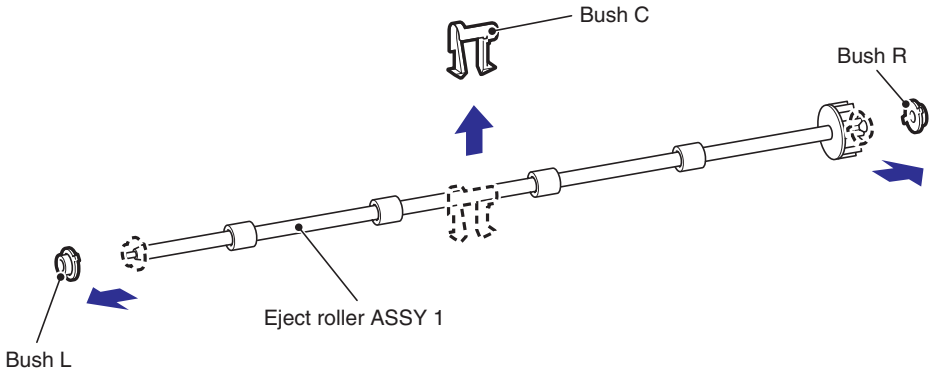

Fig. 3-14

Confidential

8.5 INNER CHUTE ASSY

(1) Remove the two Taptite bind B M4x12 screws, and then remove the Inner chute ASSY from Main body.

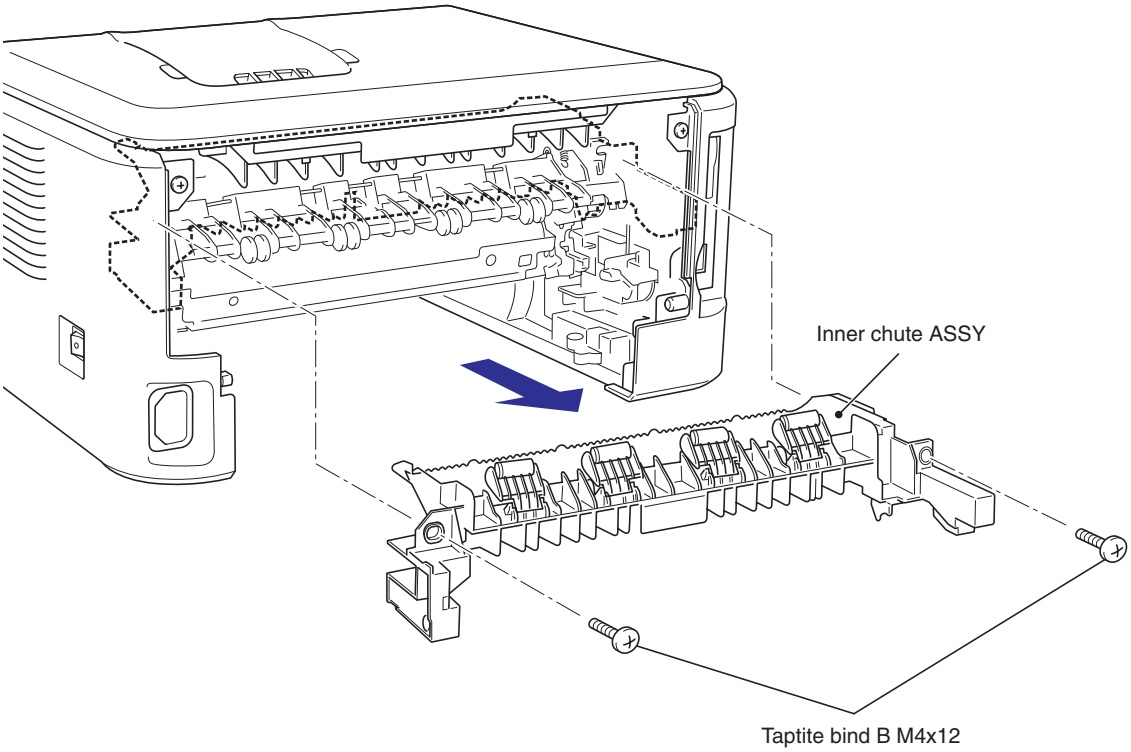

Fig. 3-15

Confidential

8.6 FUSER UNIT

(1) Disconnect the Connector.

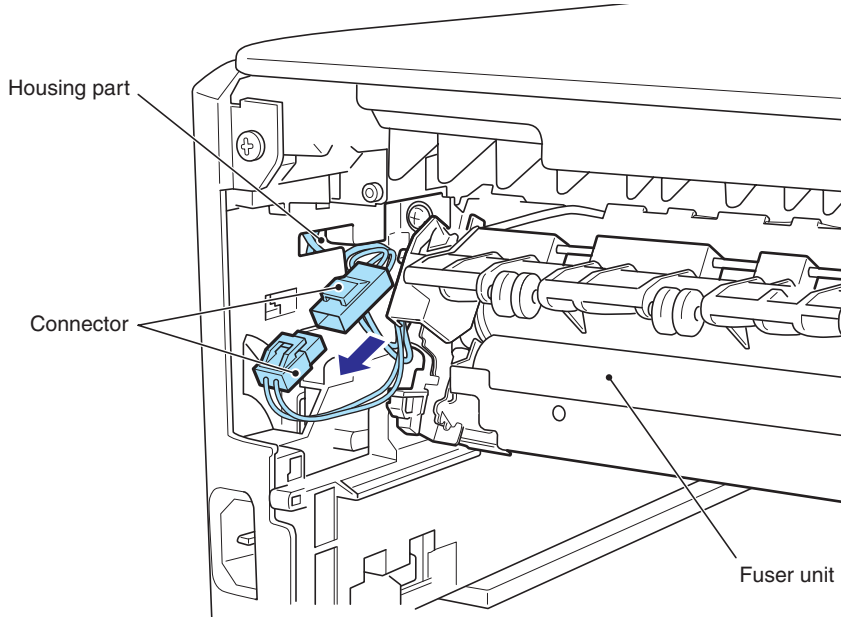

Fig. 3-16

CAUTION:
Pull out the Connector from the Housing part of the Main body left side.

(2) Disconnect the two Connectors from the Eject sensor PCB ASSY.

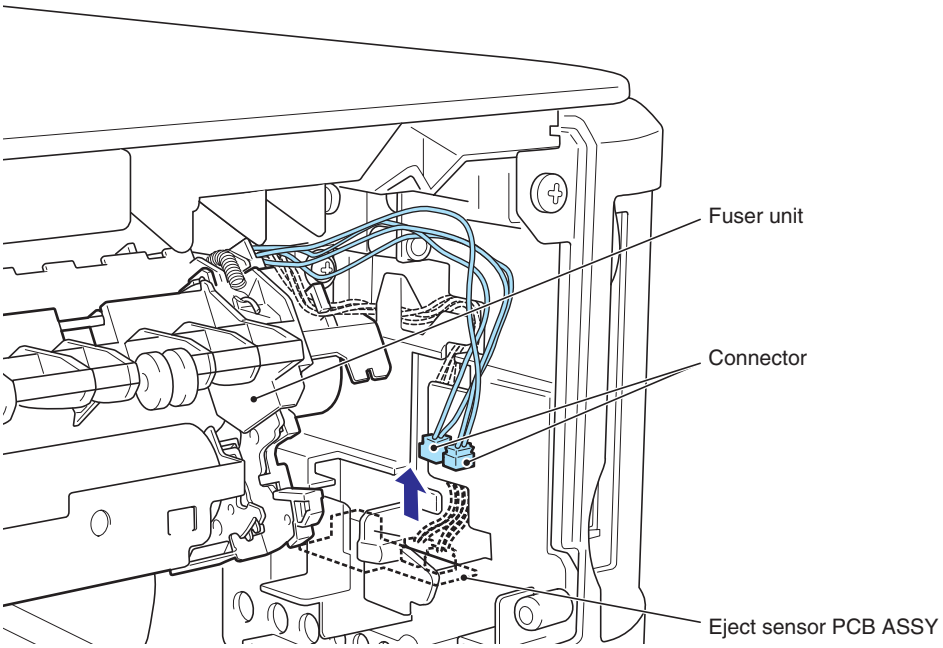

Fig. 3-17

Confidential

(3) Remove the two Taptite pan B M4x14 screws, and then remove the Fuser unit from the Main body.

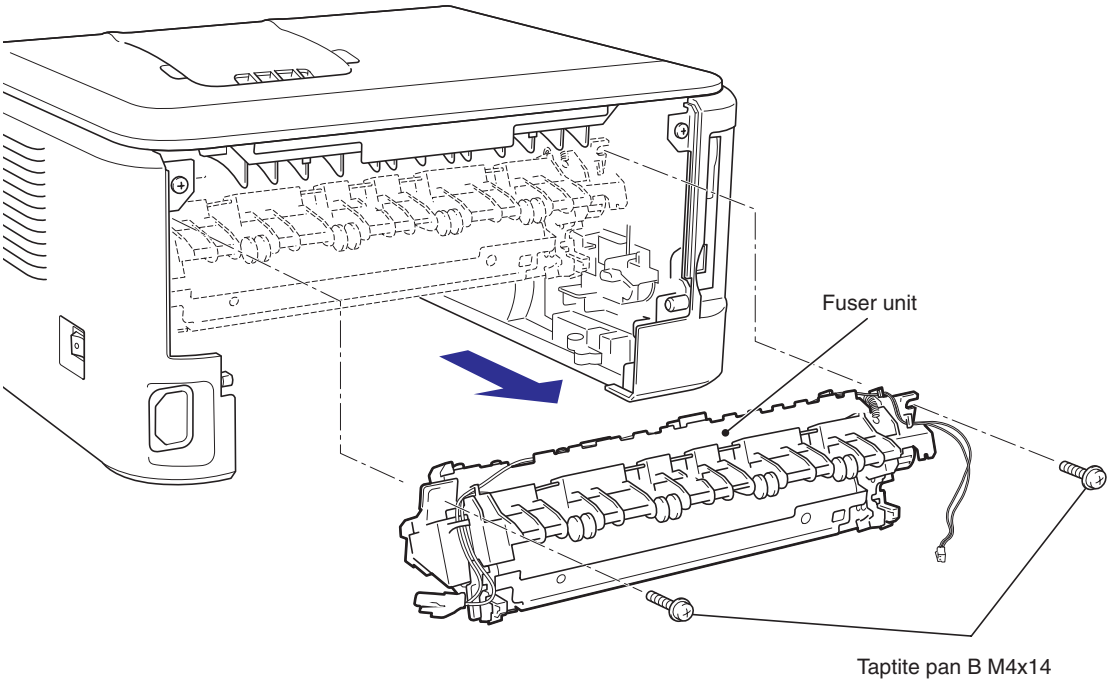

Fig. 3-18

8.7 SIDE COVER R ASSY

(1) Remove the two Taptite bind B M4x12 screws.

(2) Release the Hook to remove the Side cover R ASSY from the Main body.

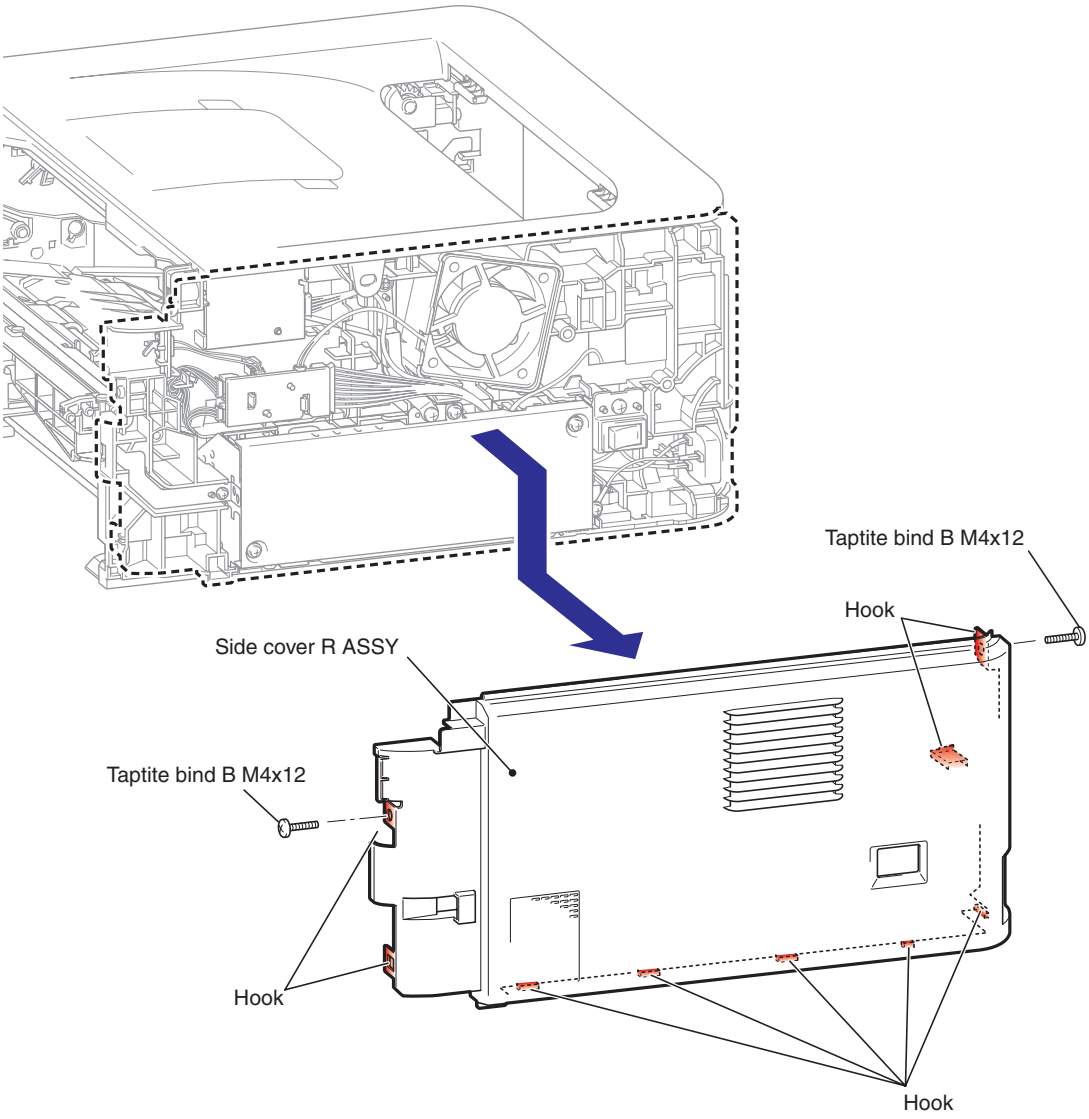

Fig. 3-19

Confidential

8.8 CORNER COVER

(1) Remove the Taptite bind B M4x12 screw.

(2) Release the Hook to remove the Corner cover from the Main body.

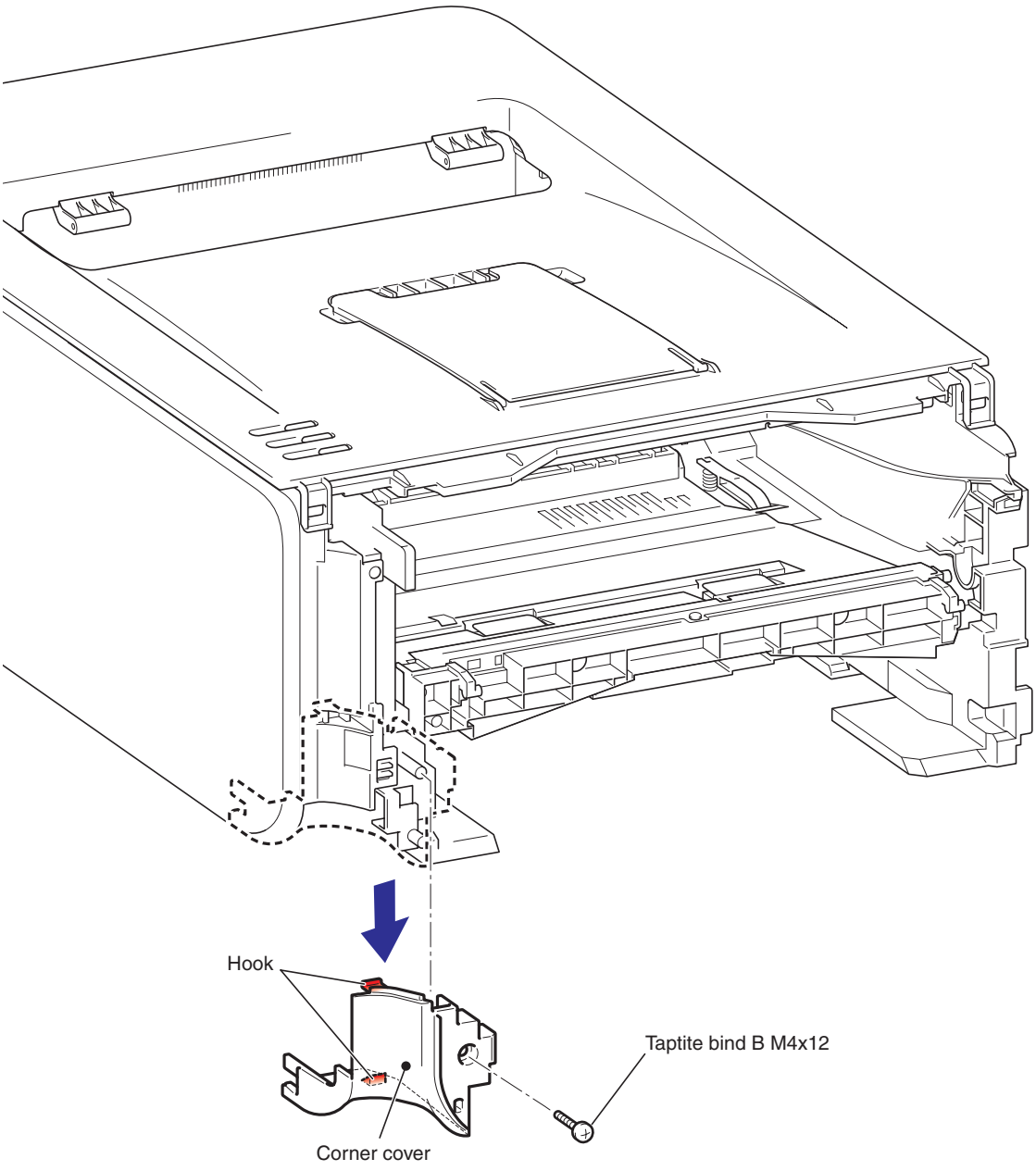

Fig. 3-20

Confidential

8.9 SIDE COVER L ASSY

(1) Remove the two Taptite bind B M4x12 screws.

(2) Release the Hook to remove Side cover L ASSY from the Main body.

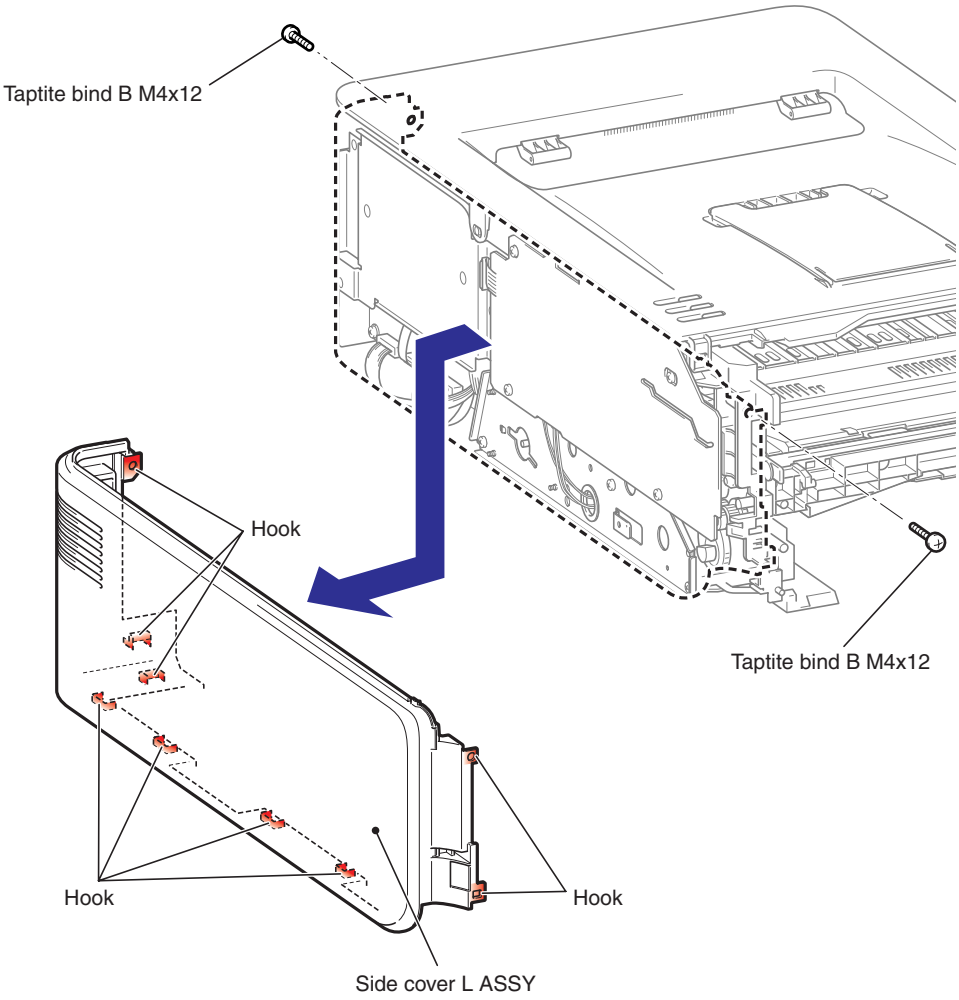

Fig. 3-21

Confidential

8.10 ROLLER HOLDER ASSY

(1) Release the Boss of the Roller holder ASSY from the Link arm.

(2) Press the Rib of the Paper feed frame, and the slide the Separation R shaft bush.

(3) Remove the Roller holder ASSY from the Main body.

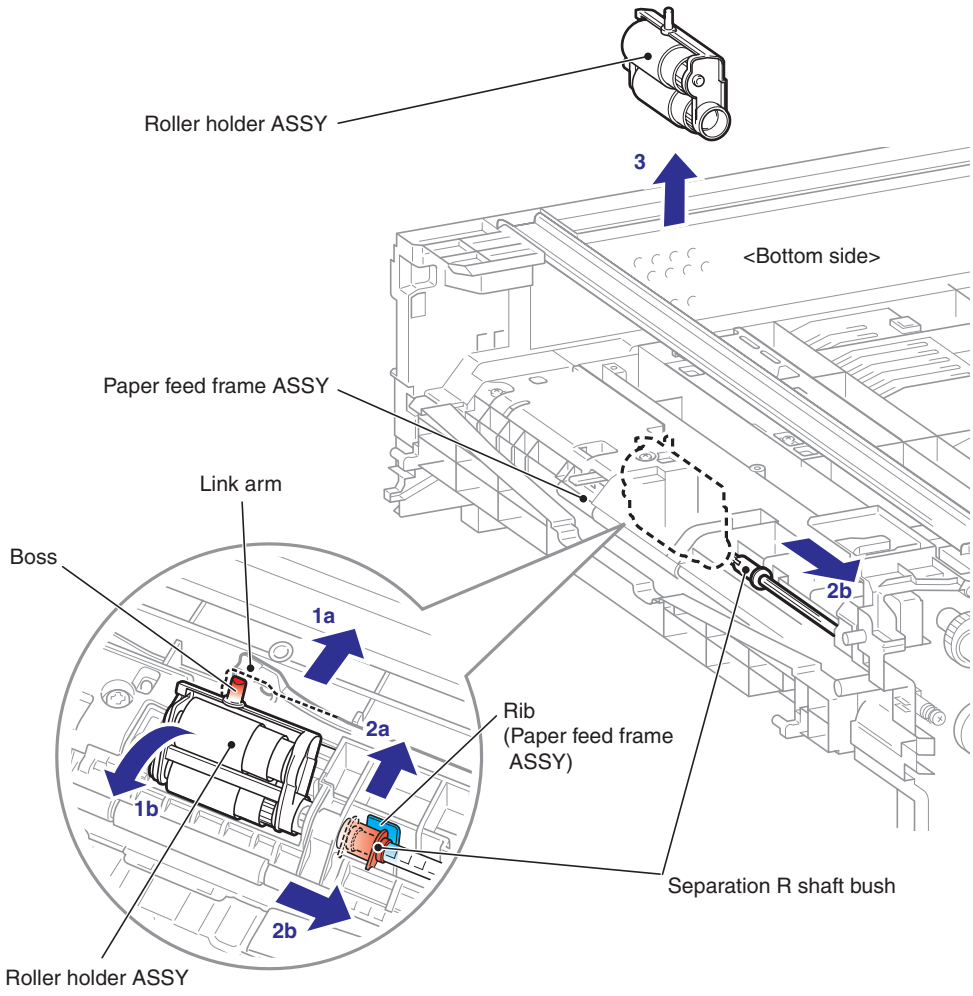

Fig. 3-22

Assembling Note:

When assembling the Roller holder ASSY to the Main body, note the assembling method referring to the figure below.

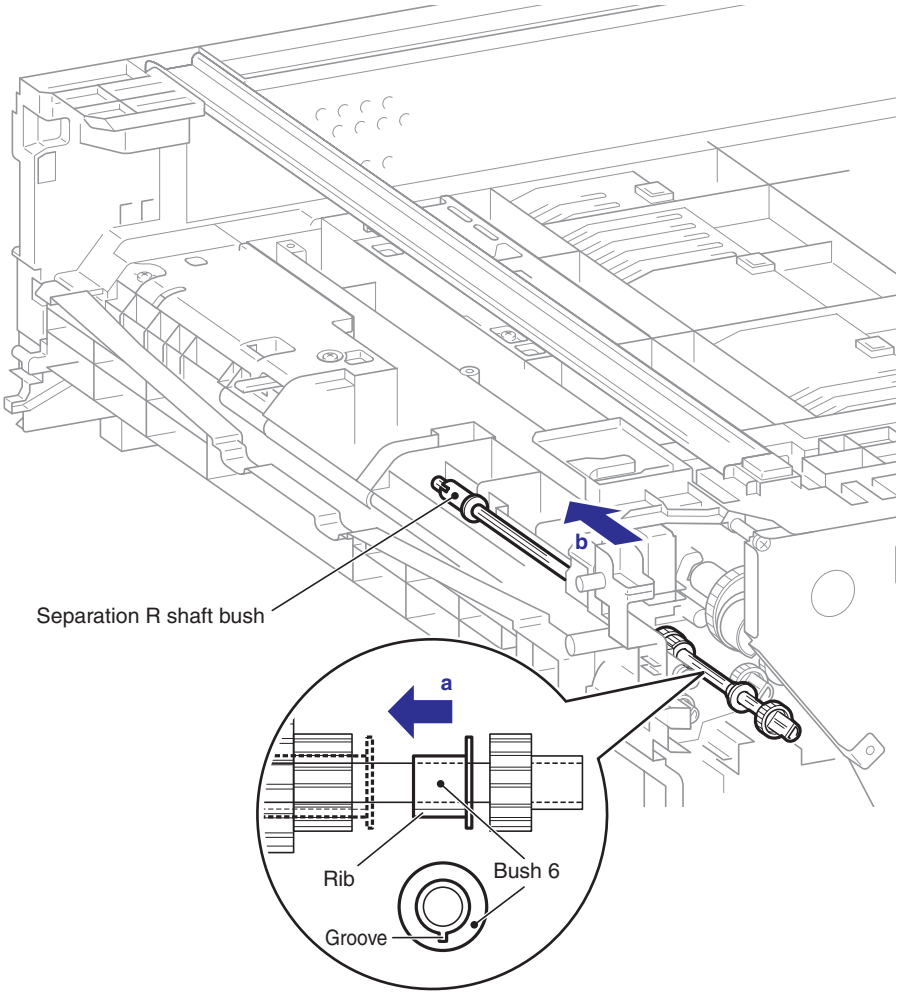

Fig. 3-23

CAUTION:

When the Separation R shaft bush does not slide, put the Rib of the Bush 6 while aligning the Groove of the Main body shaft hole from the Main frame L ASSY side.

8.11 WIRELESS LAN PCB ASSY (only HL-2170W)

(1) Disconnect the Connector from the Wireless LAN PCB ASSY.

(2) Release the Hook to remove the Wireless LAN PCB ASSY from the Main body.

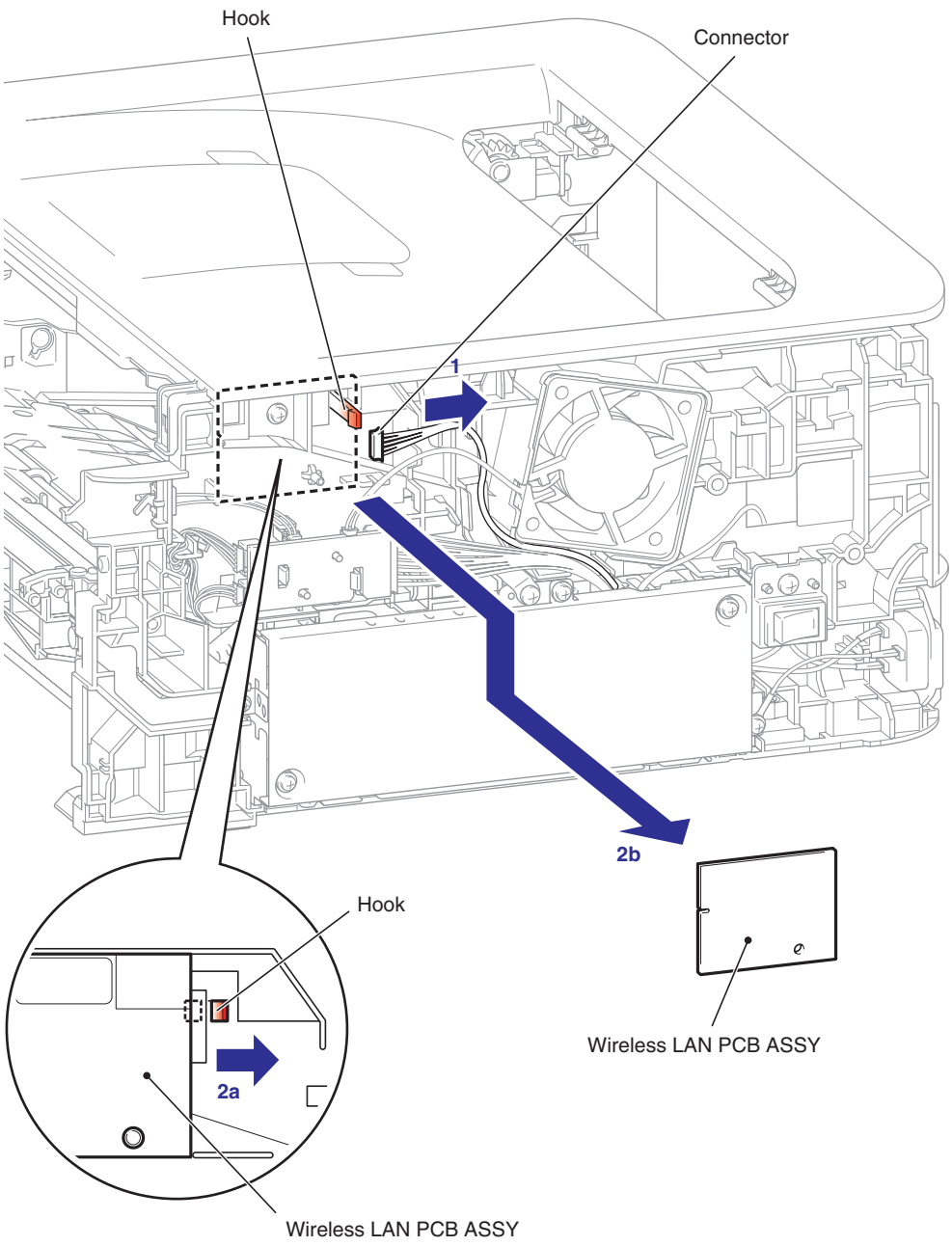

Fig. 3-24

8.12 MAIN SHIELD COVER PLATE

(1) Remove the three Taptite cup S M3x6 SR screws, and then remove the Main shield cover plate from the Main body.

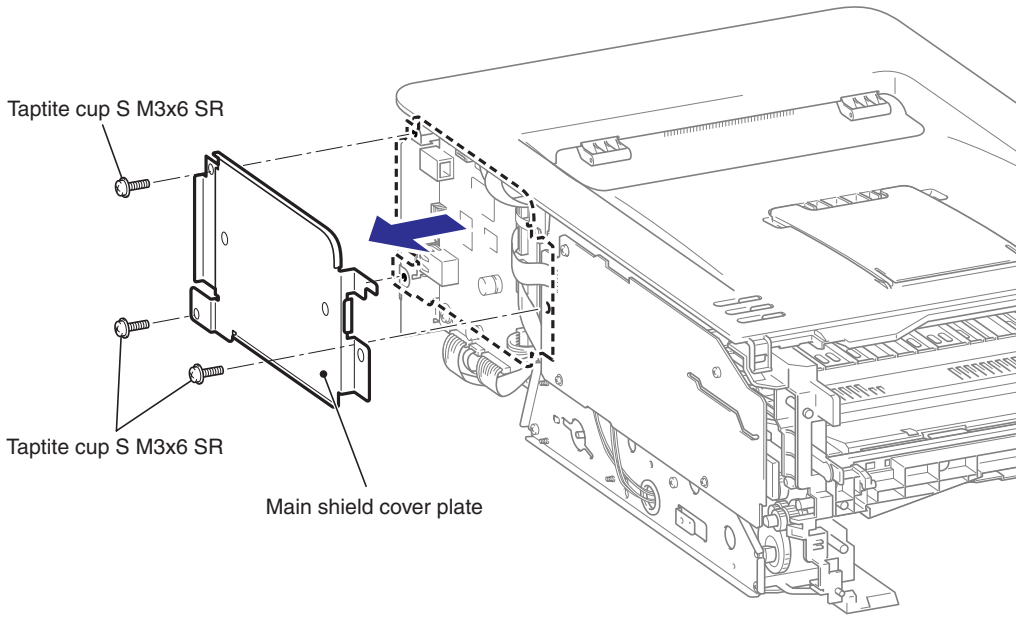

Fig. 3-25

Confidential

8.13 MAIN PCB ASSY

(1) Disconnect the six FFCs and the three Connectors from the Main PCB ASSY.

(2) Remove the four Taptite cup S M3x6 SR screws, and then remove the FG harness ASSY and Main PCB ASSY from the Main body.

Memo :

The five Taptite cup S M3x6 SR screws. (HL-2150N/2170W only)

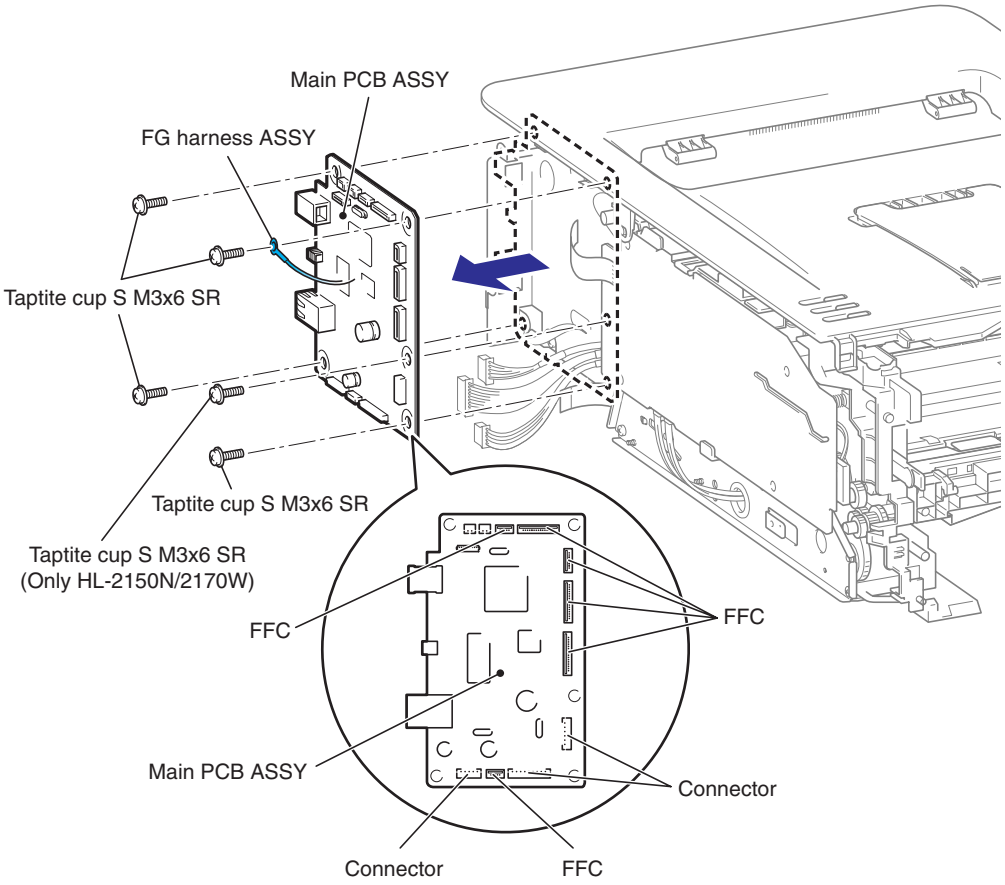

Fig. 3-26

Note:

- After disconnecting the flat cable(s), check that each cable is not damaged at its end or short-circuited.
- When connecting the flat cable(s), do not insert it at an angle. After insertion, check that the cable is not at an angle.

Assembling Note:

If the FG harness ASSY which comes from the Laser unit is not connected, the Laser unit break down.

8.14 TOP COVER ASSY

8.14.1 TOP COVER ASSY

(1) Remove the two Taptite bind B M4x12 screws.

(2) Release the Hook to remove the Top cover ASSY from the Main body.

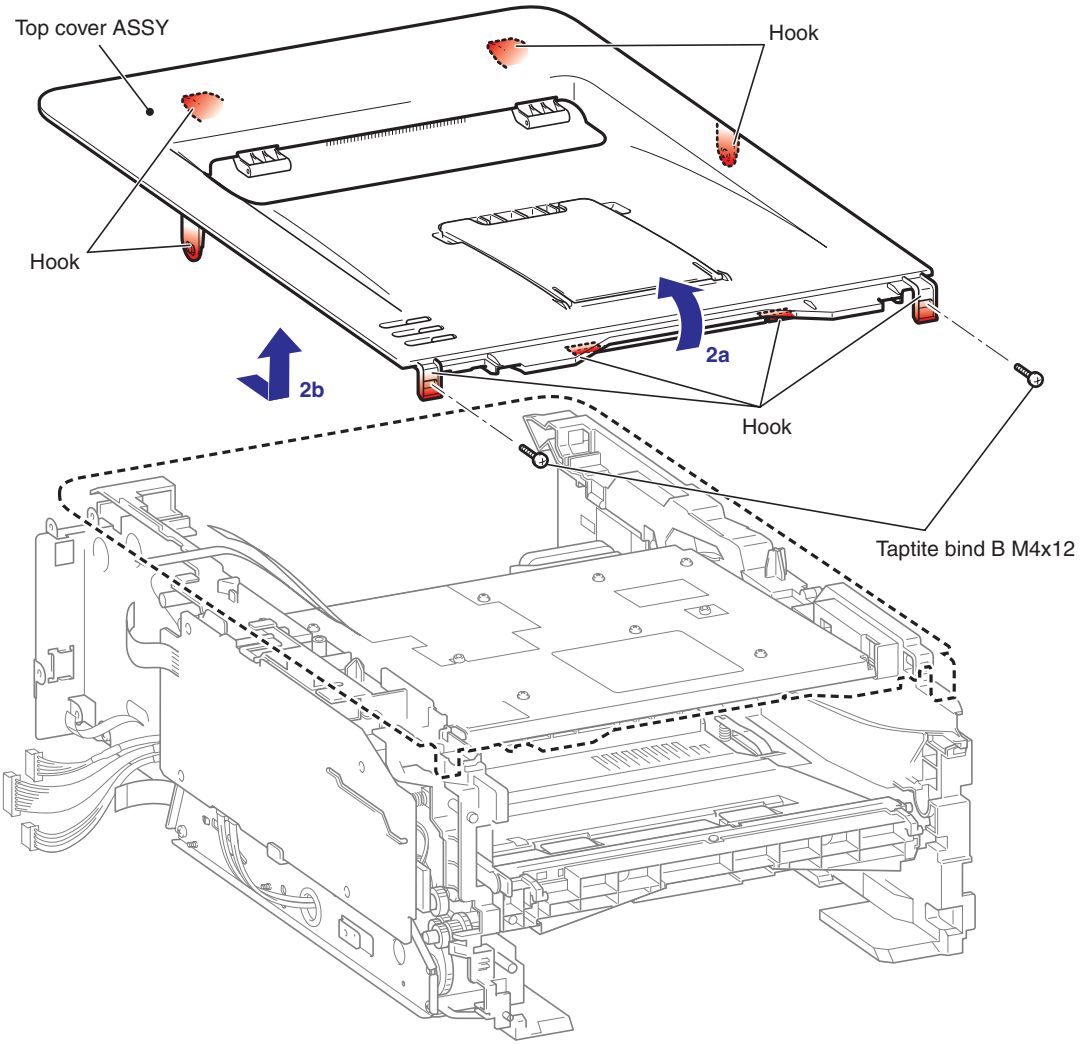

Fig. 3-27

Confidential

8.14.2 PAPER STACK LEVER

(1) Release the Boss to remove the two Paper stack levers from the Top cover ASSY.

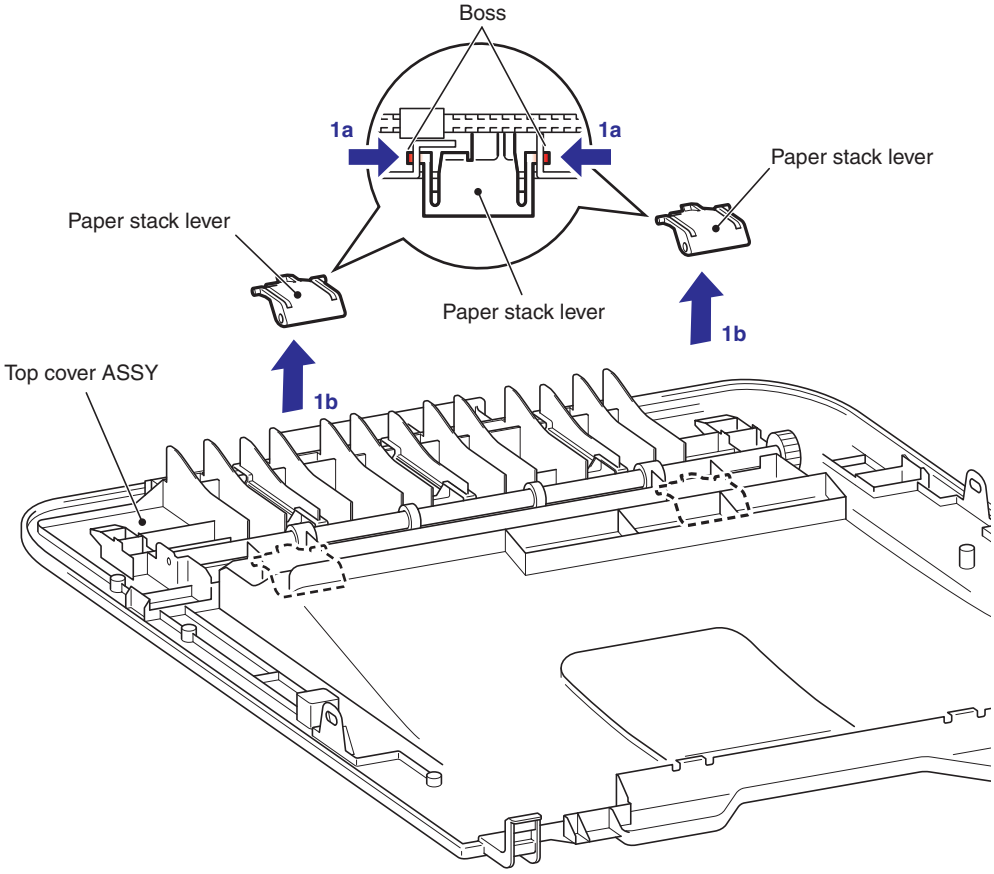

Fig. 3-28

8.14.3 SUPPORT FLAP 1 / SUPPORT FLAP 2

(1) Release the Boss to remove the Support flap 1 from the Main body.

(2) Release the Boss to remove the Support flap 2 from the Main body.

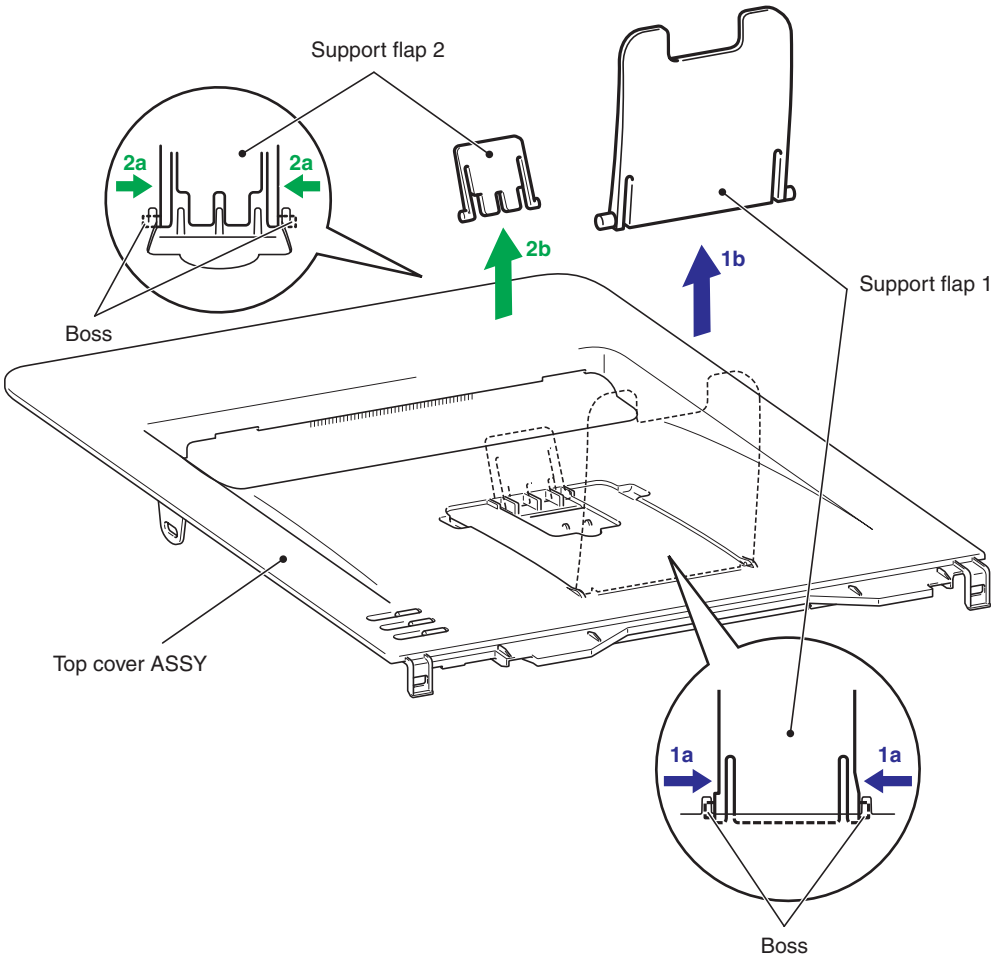

Fig. 3-29

8.14.4 EJECT ROLLER ASSY 2 / BUSH R / BUSH L

(1) Remove the Eject roller ASSY 2 from the Top cover ASSY.

(2) Remove the Bush R and the Bush L from the Eject roller ASSY 2.

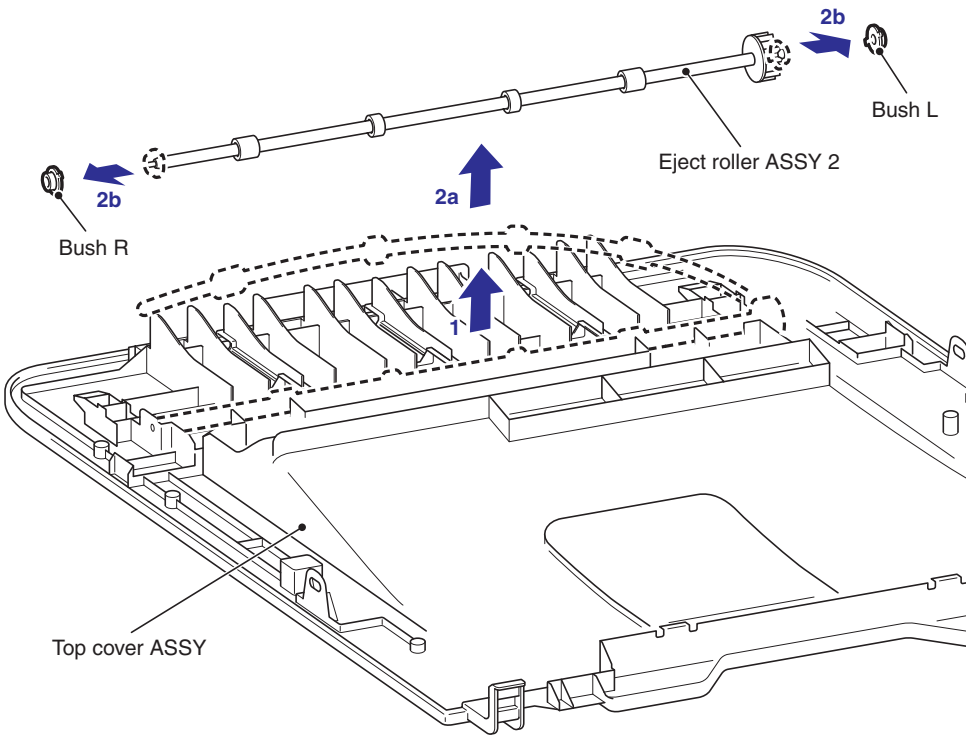

Fig. 3-30

Confidential

8.15 SW SUPPORTER

(1) Release the Hook to remove the SW supporter from the Main body.

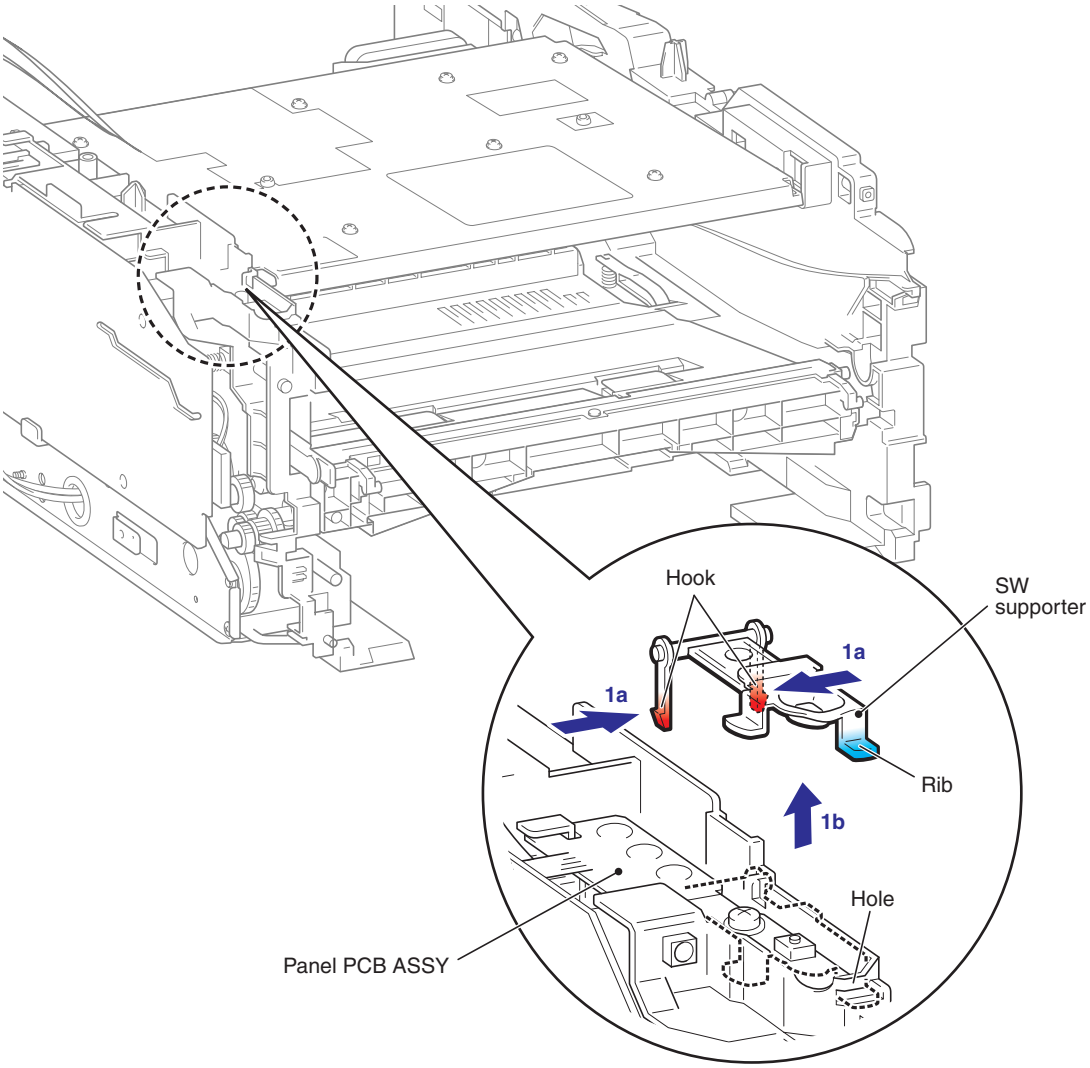

Fig. 3-31

Confidential

8.16 PANEL PCB ASSY

(1) Remove the Panel film.

(2) Remove the Taptite cup B M3x8 screw.

(3) Remove the Panel PCB ASSY from the Main body.

(4) Disconnect the two connectors from the Panel PCB ASSY.

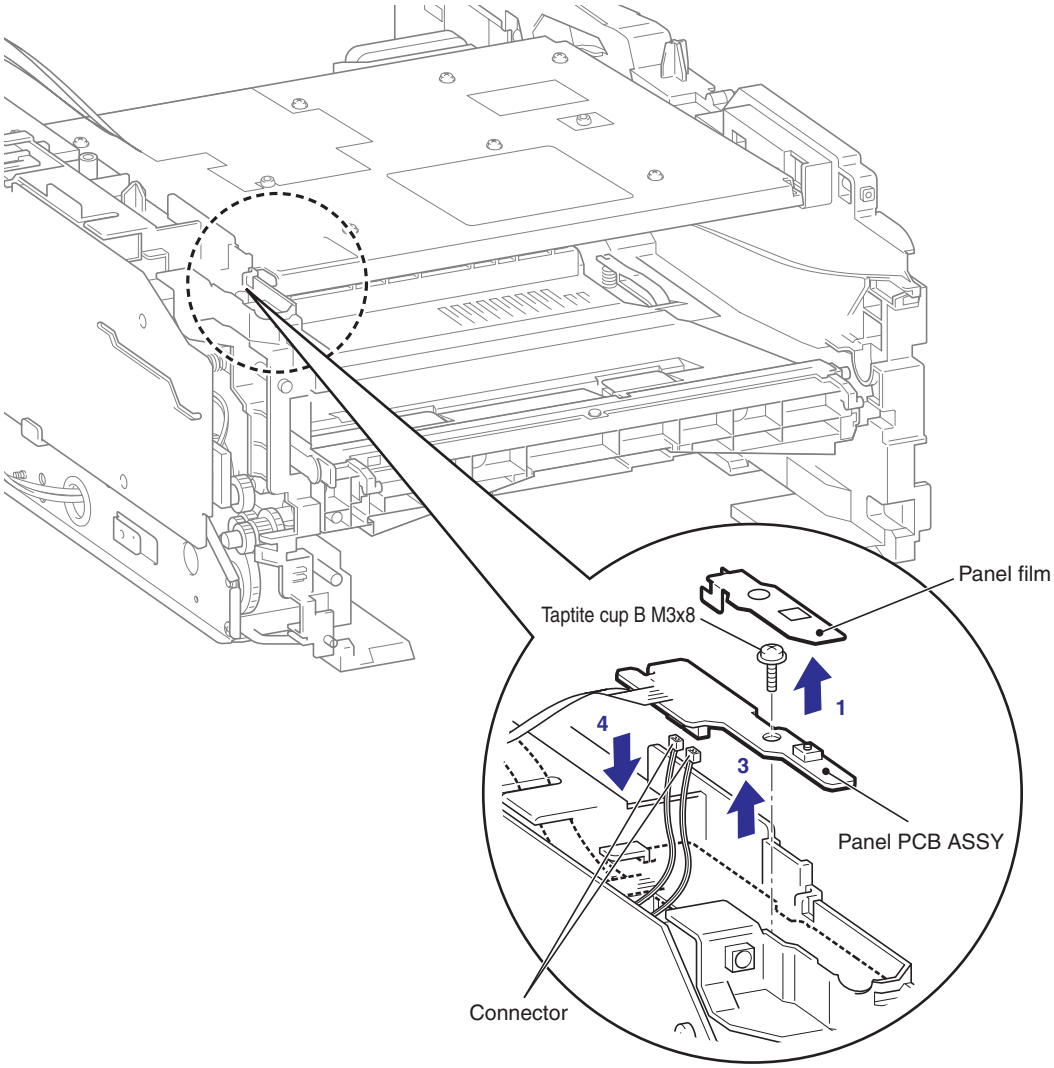

Fig. 3-32

Confidential

8.17 HIGH-VOLTAGE PS PCB ASSY

(1) Disconnect the two connectors from the High-voltage PS PCB ASSY.

(2) Remove the two Taptite cup S M3x6 SR screws and the two Taptite bind B M4x12 screws.

(3) Release the Hook to remove High-voltage PS PCB ASSY from the Drive sub ASSY.

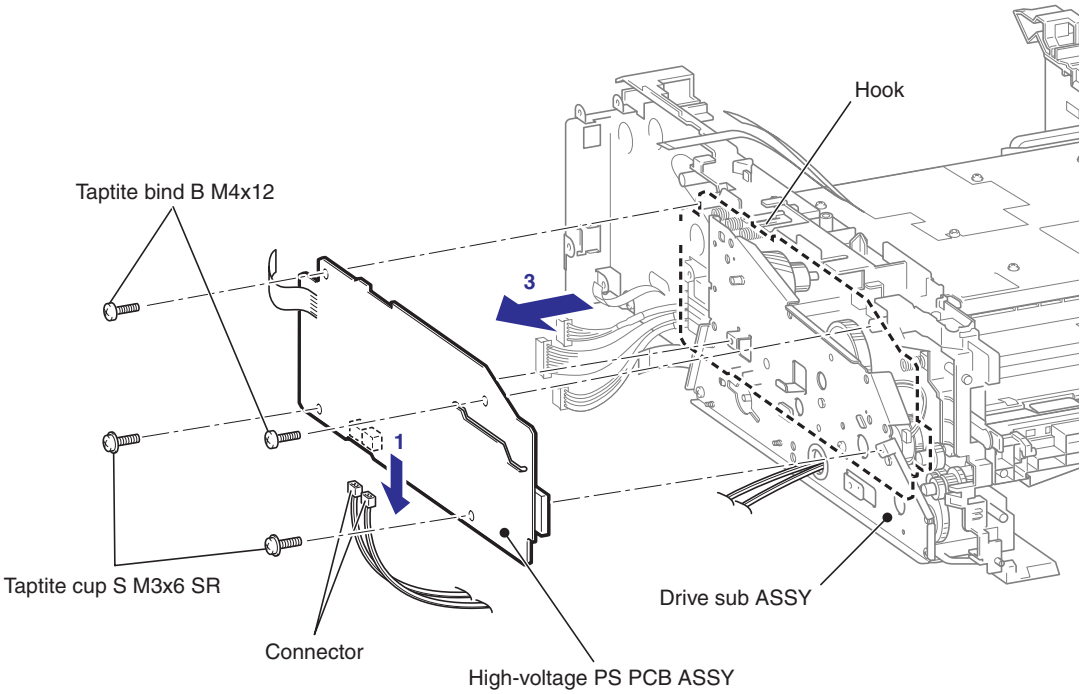

Fig. 3-33

Note:
There are procedures for disassembling Main frame L ASSY after this procedure.
(8.31 MAIN FRAME L ASSY)

8.18 NEW TONER SENSOR HARNESS ASSY

(1) Release the Hook to remove the New toner sensor harness ASSY from the Main body.

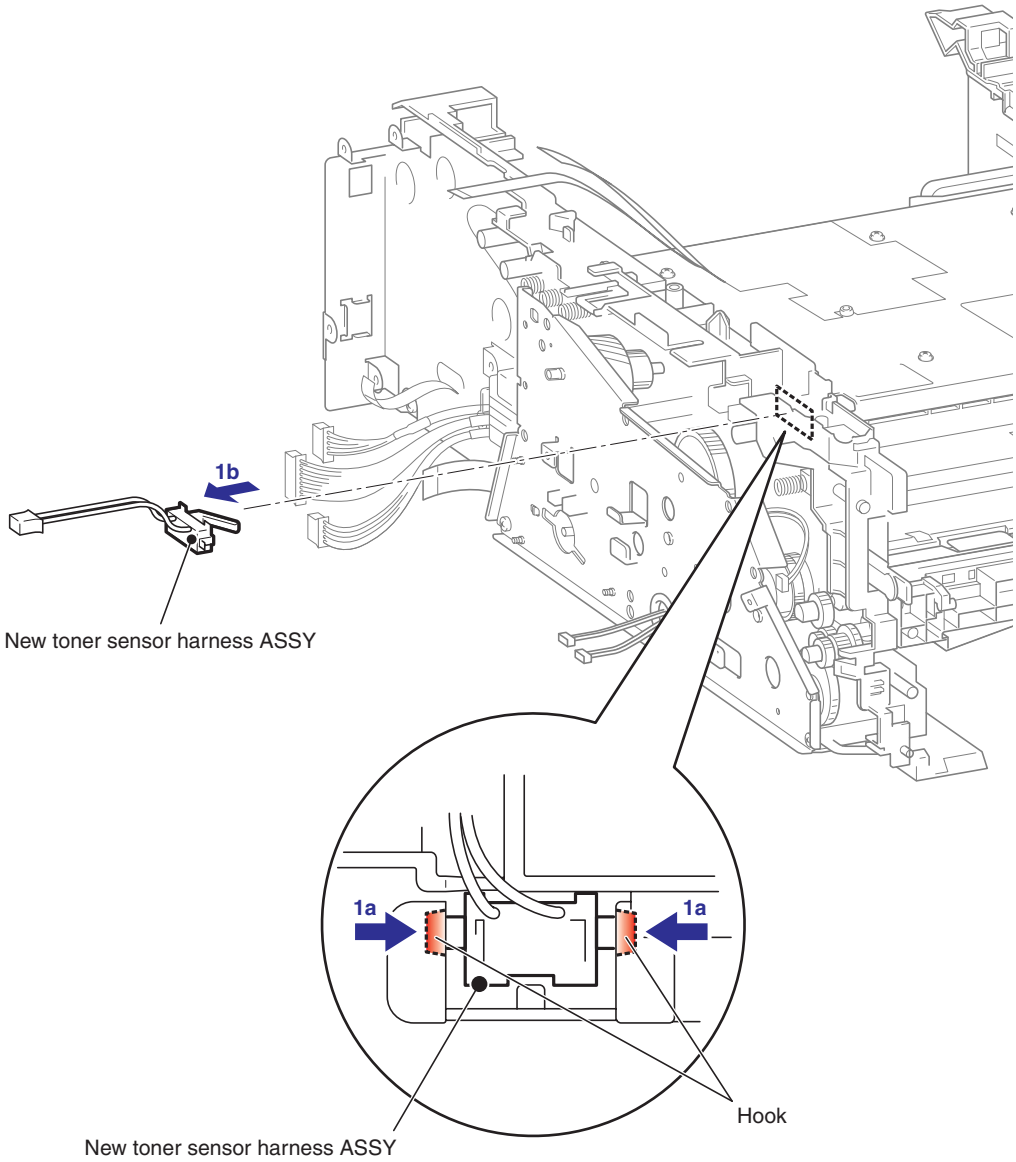

Fig. 3-34

CAUTION:

Be careful not to damage the Hook of the New toner sensor harness ASSY.

8.19 FILTER ASSY

(1) Remove the Filter ASSY from the Main body.

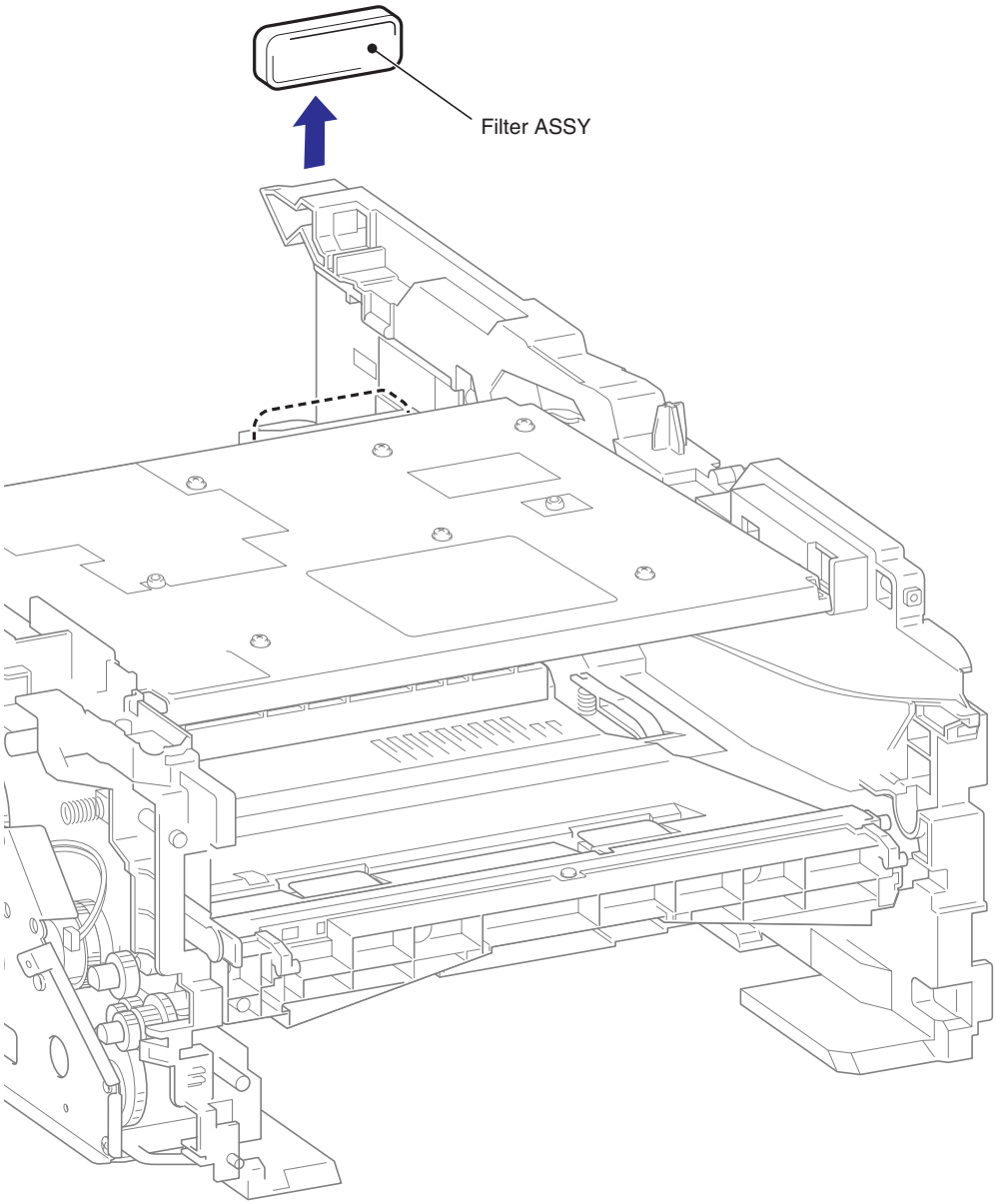

Fig. 3-35

8.20 LASER UNIT

(1) Remove the four Taptite cup S M3x6 SR screws, and then remove the Laser unit from the Main body.

Memo :

- The two Taptite cup S M3x6 SR screws and the two Taptite pan (S/P washer) S M3x8 screws. (HL-2150N/2170W only)
- Remove the Laser unit in the state that the DEV joint link is pulled out.

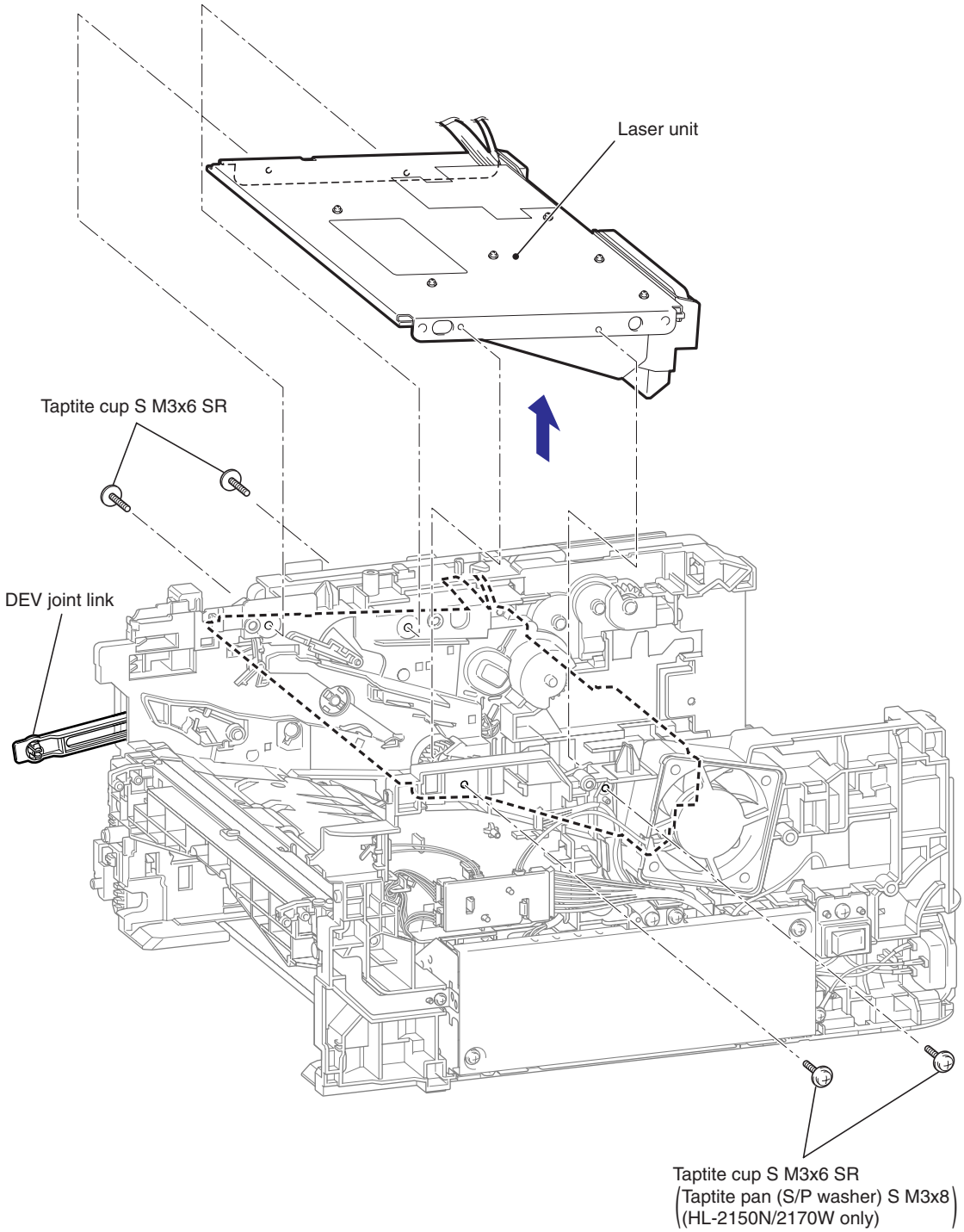

Fig. 3-36

(2) Remove the Taptite cup S M3x6 SR screw, and then remove the FG harness ASSY from the Laser unit.

(3) Remove the Taptite cup S M3x6 SR screw, and then remove the Air duct from the Laser unit.

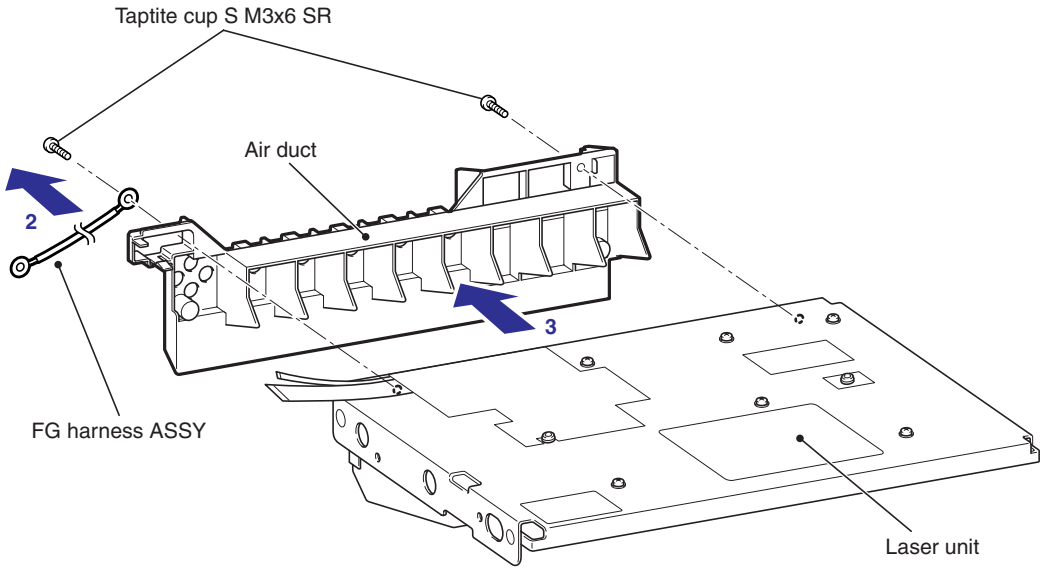

Fig. 3-37

CAUTION:

When replacing the Laser unit, replace the Serial label attached on the Drive sub ASSY with a new one supplied with a new unit. Another Serial label supplied with a new unit is spare. Make sure to throw it out. When replacing the Laser unit, it is necessary to input the characteristics information.

(Refer to "3. IF YOU REPLACE THE LASER UNIT" in Chapter 4.)

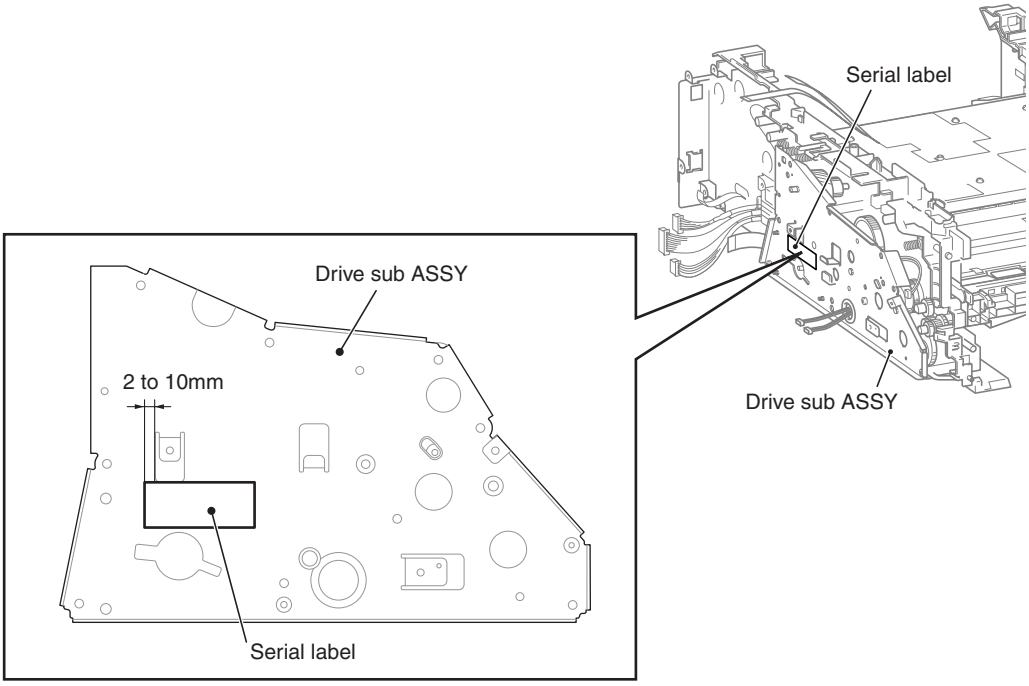

Fig. 3-38

8.21 FAN MOTOR 60 UNIT / COVER SENSOR HARNESS ASSY / TONER LED PCB ASSY

8.21.1 FAN MOTOR 60 UNIT

(1) Disconnect the Connector from the Toner LED PCB ASSY.

(2) Remove the Fan motor 60 unit from the Main body.

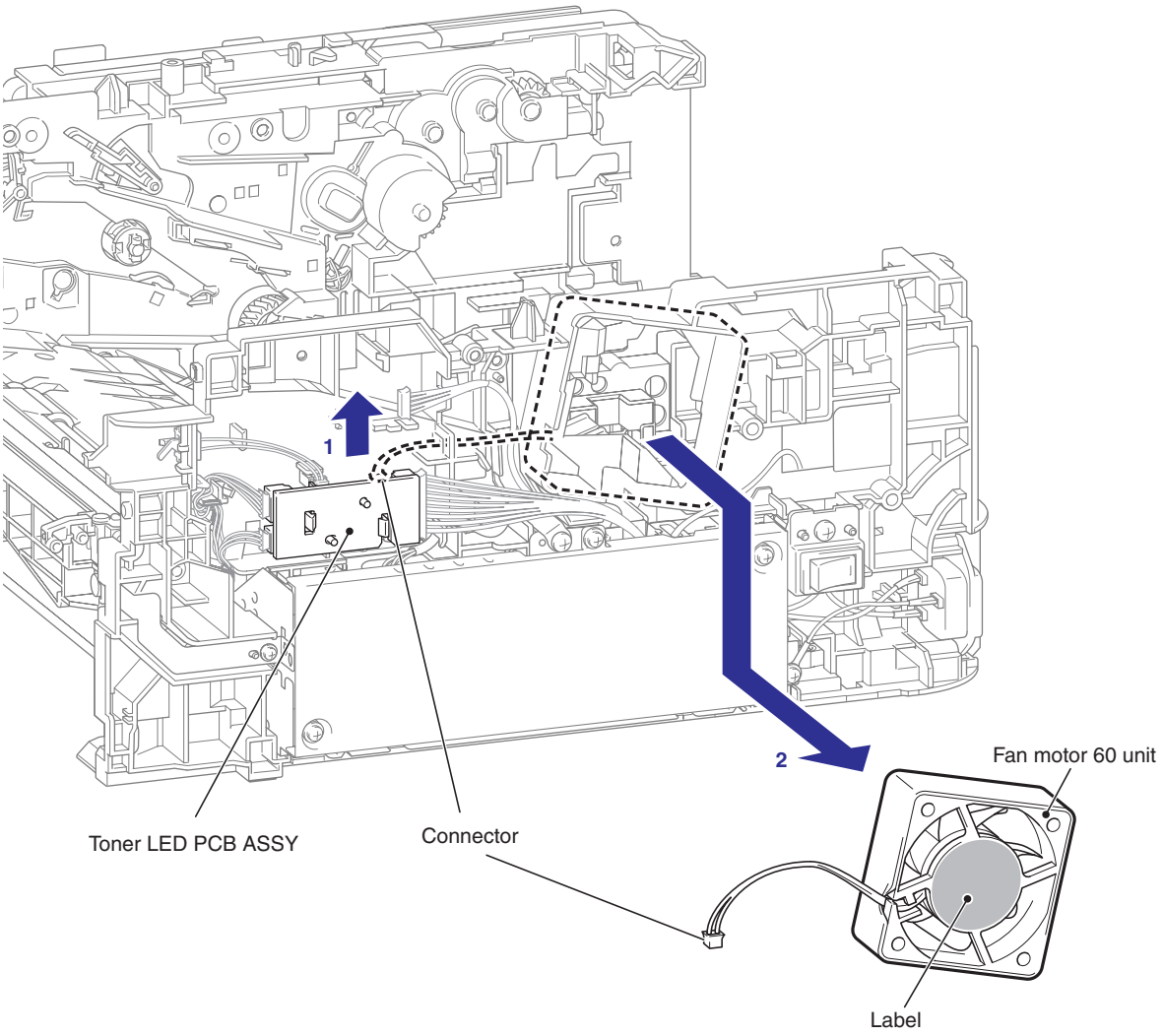

Fig. 3-39

Assembling Note:

When assembling the Fan motor 60 unit, place it so that the attached Label faces outwards.

8.21.2 COVER SENSOR HARNESS ASSY

(1) Disconnect the Connector from the Toner LED PCB ASSY.

(2) Release the Hook to remove the Cover sensor harness ASSY from the Main body.

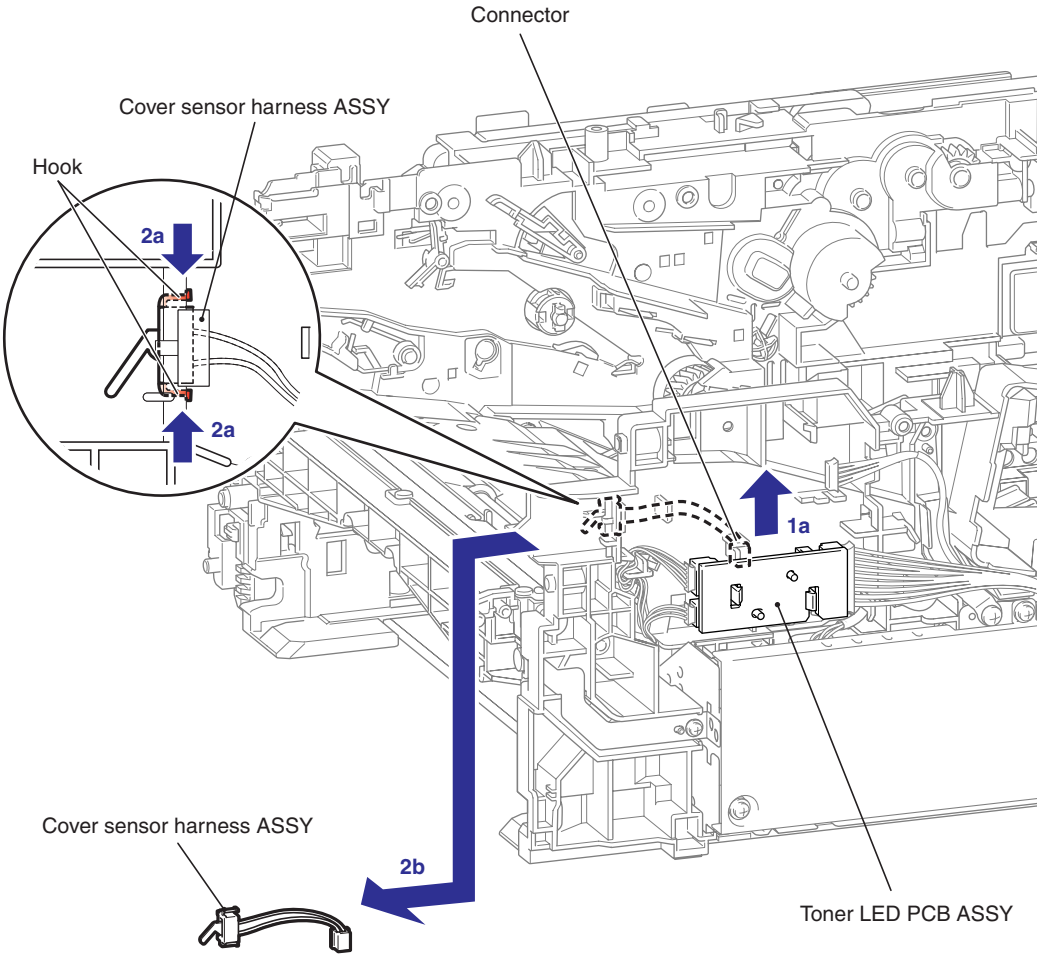

Fig. 3-40

CAUTION:

When removing the Cover sensor harness ASSY, remove it as shown in the direction of the allow 2b. Be careful not to damage the Hook.

8.21.3 TONER LED PCB ASSY

(1) Disconnect the three connectors from the Toner LED PCB ASSY.

(2) Release the Hook to remove the Toner LED PCB ASSY from the Main body.

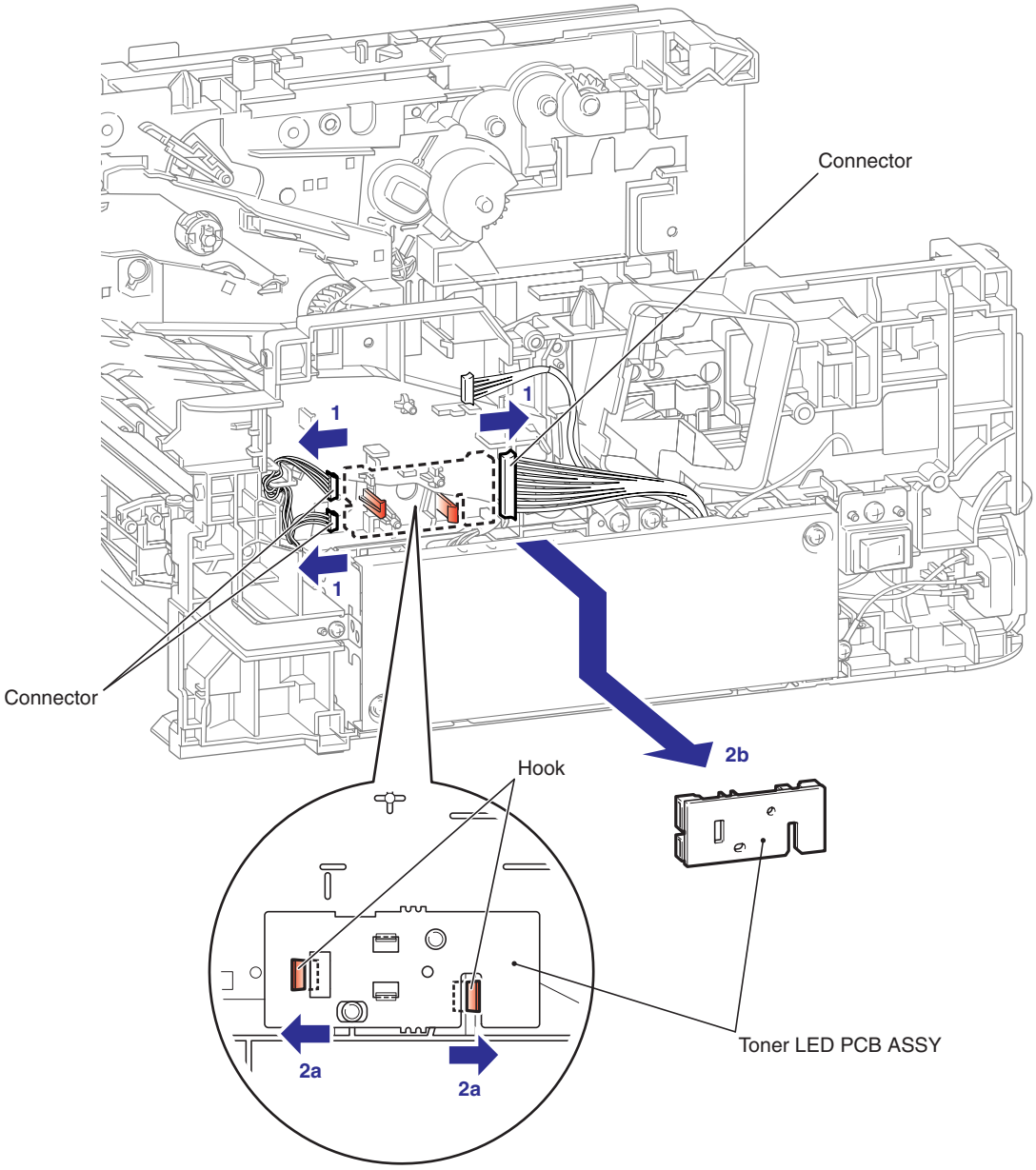

Fig. 3-41

(3) Release the Hook to remove the LED holder from the Toner LED PCB ASSY.

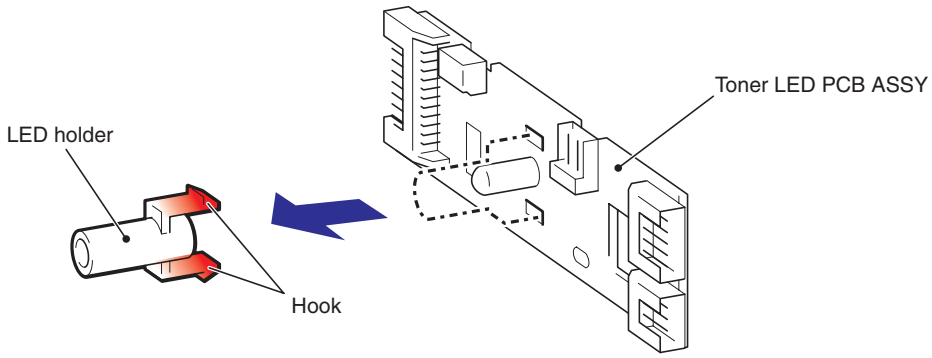

Fig. 3-42

Confidential

8.22 LVPS

8.22.1 PS PCB UNIT

(1) Remove the Taptite pan (S/P washer) M3.5x6 screw and the two Taptite cup S M3x6 SR screws, and then remove the LV shield plate cover and the LV insulation sheet from LV Shield plate 2.

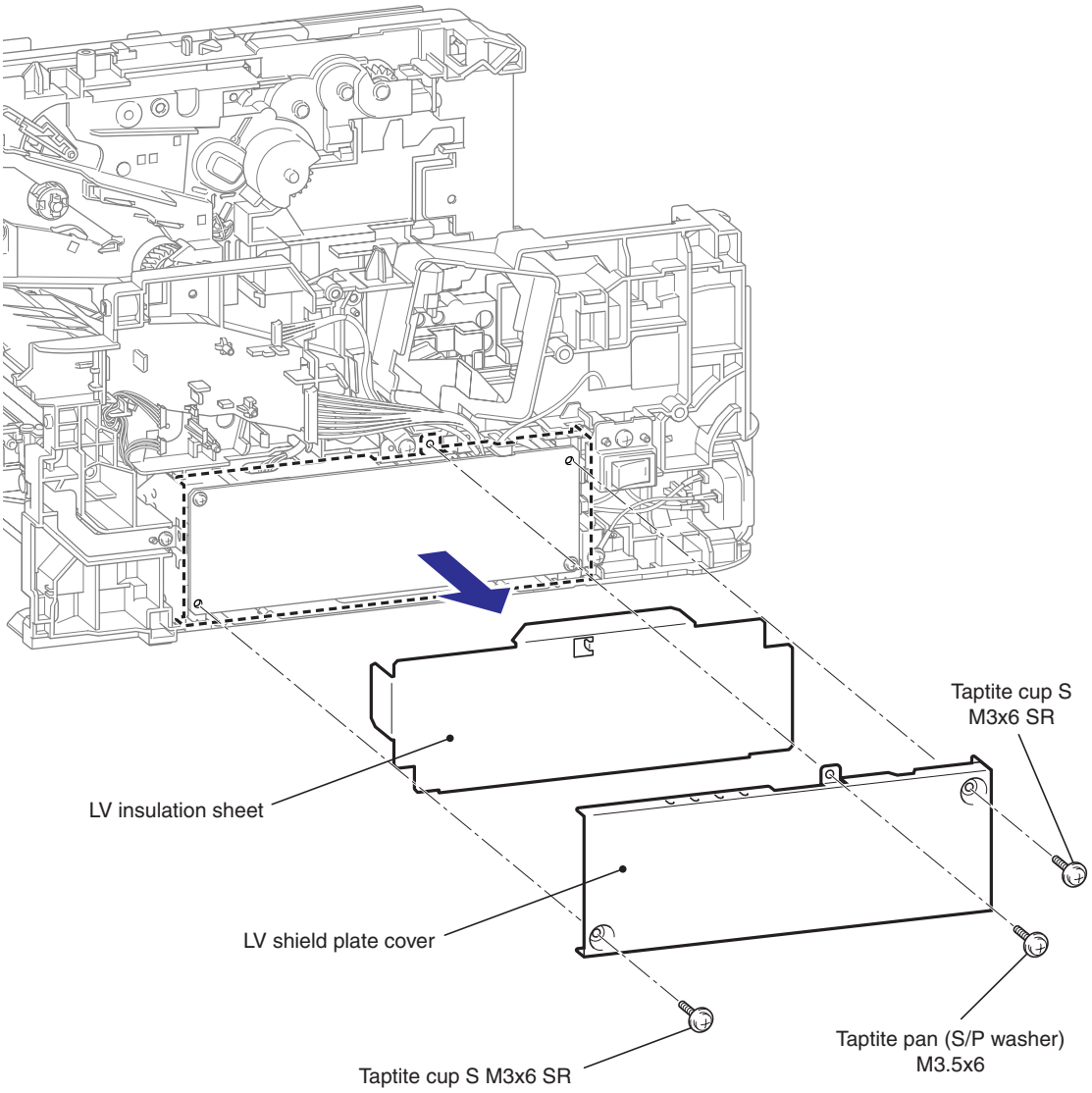

Fig. 3-43

Confidential

(2) Remove the Taptite bind B M4x12 screw, and then remove the SW holder from the Main body.

(3) Remove the Taptite pan (S/P washer) M3.5x6 screw, and then remove the FG harness ASSY of the Inlet harness ASSY from the LV shield plate 2.

(4) Remove the two Taptite flat B M3x10 screws, and then remove the Inlet harness ASSY from the Main body.

(5) Remove the two Taptite cup S M3x6 SR screws, and then remove the PS PCB unit from the LV shield plate 2.

(6) Remove the two Edge holder 3 from the LV shield plate 2.

(7) Disconnect the Connector from the PS PCB unit.

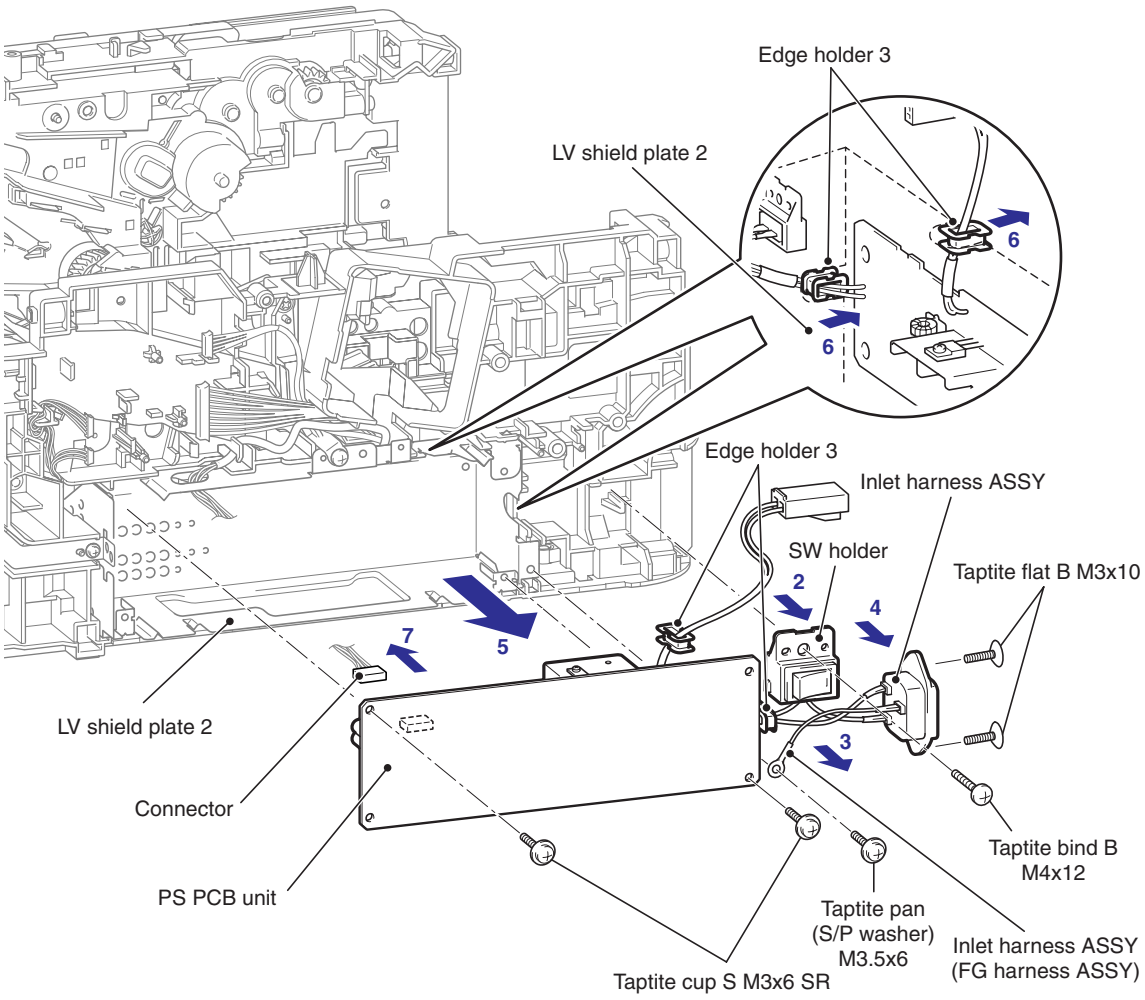

Fig. 3-44

8.22.2 LV SHIELD PLATE 2

(1) Remove the two Taptite bind B M4x12 screws and the two Taptite cup S M3x6 SR screws, and then remove the LV shield plate 2.

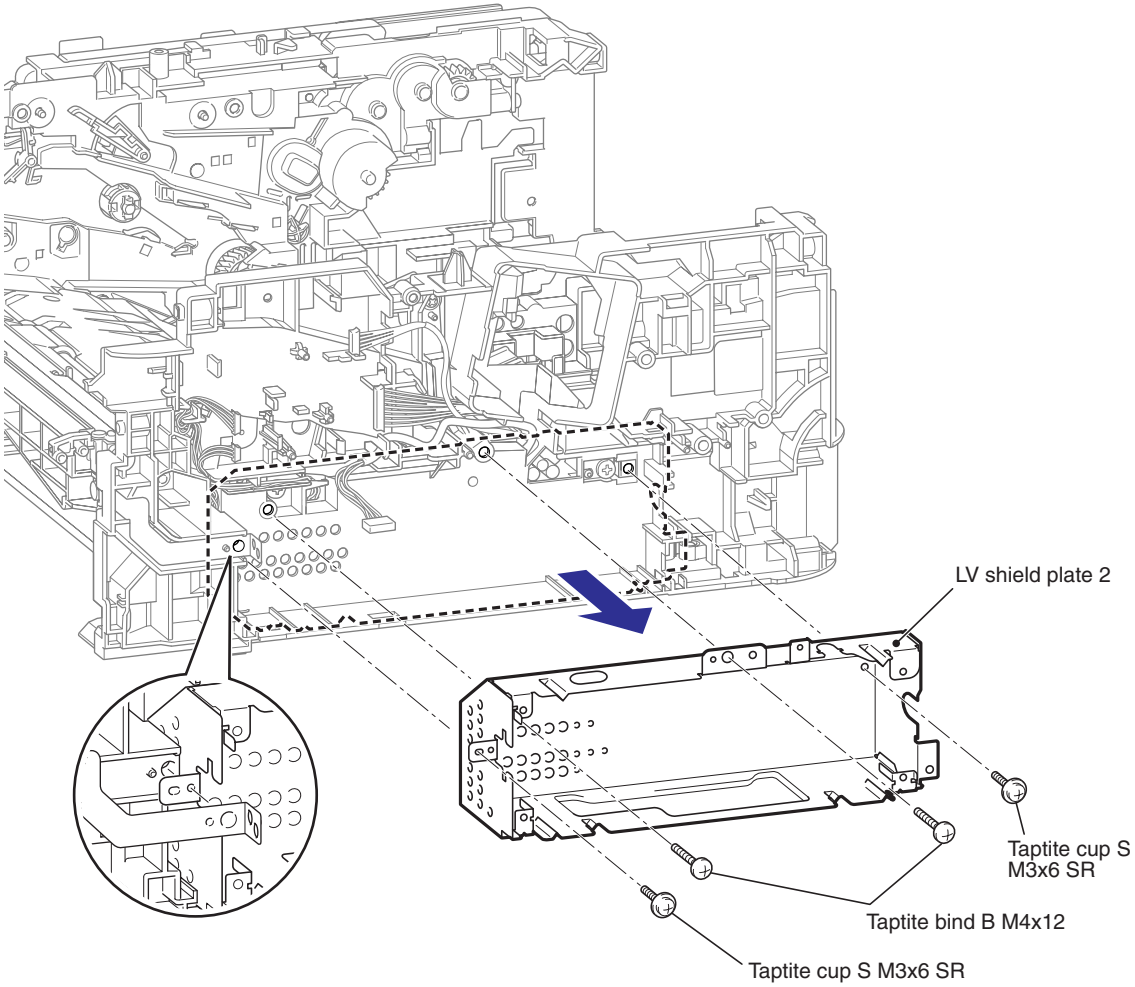

Fig. 3-45

8.23 REGISTRATION FRONT SENSOR PCB ASSY

(1) Remove the Harness of the Registration front sensor PCB ASSY and Registration rear sensor PCB ASSY from the Guide part of the Main body.

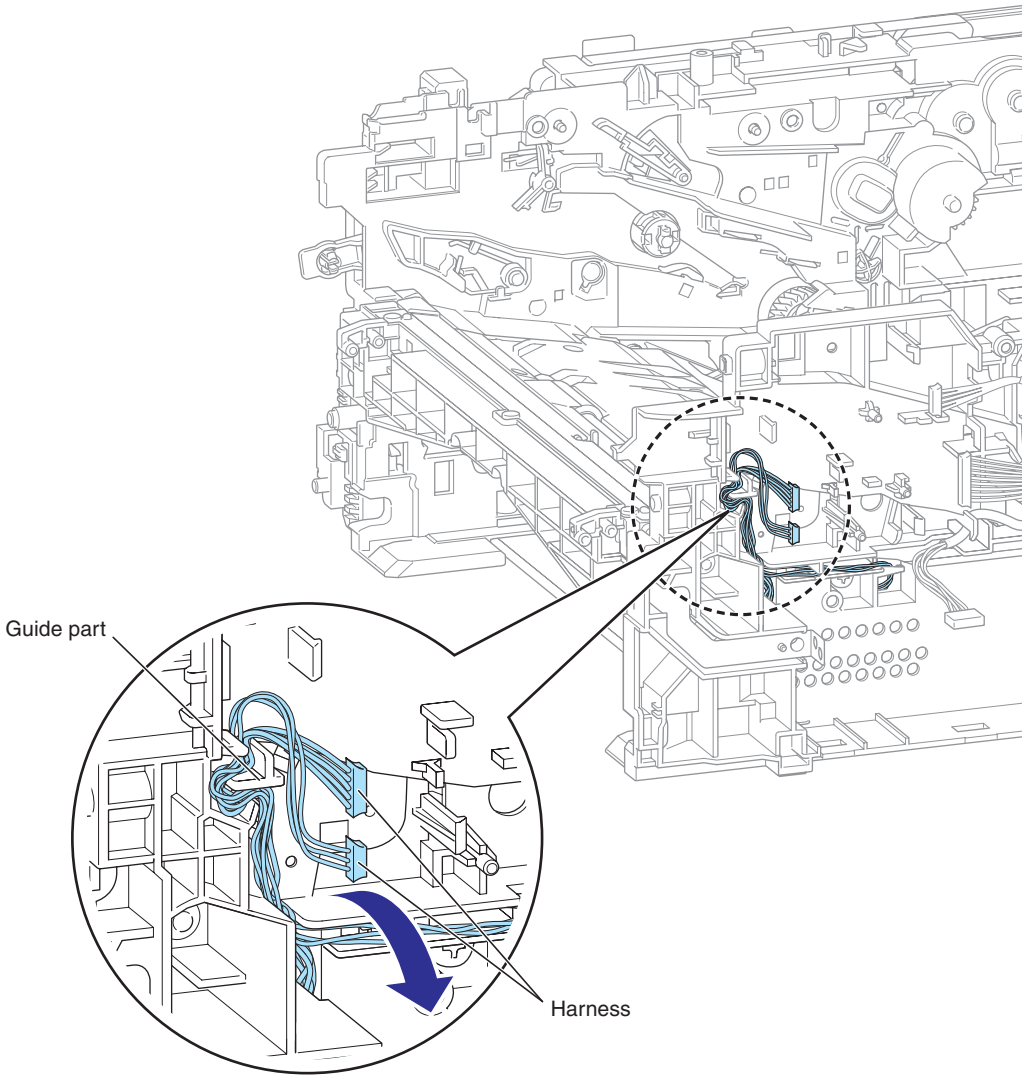

Fig. 3-46

Confidential

(2) Remove the two Taptite bind B M3x10 screws, and then remove the Actuator holder ASSY from the Main body.

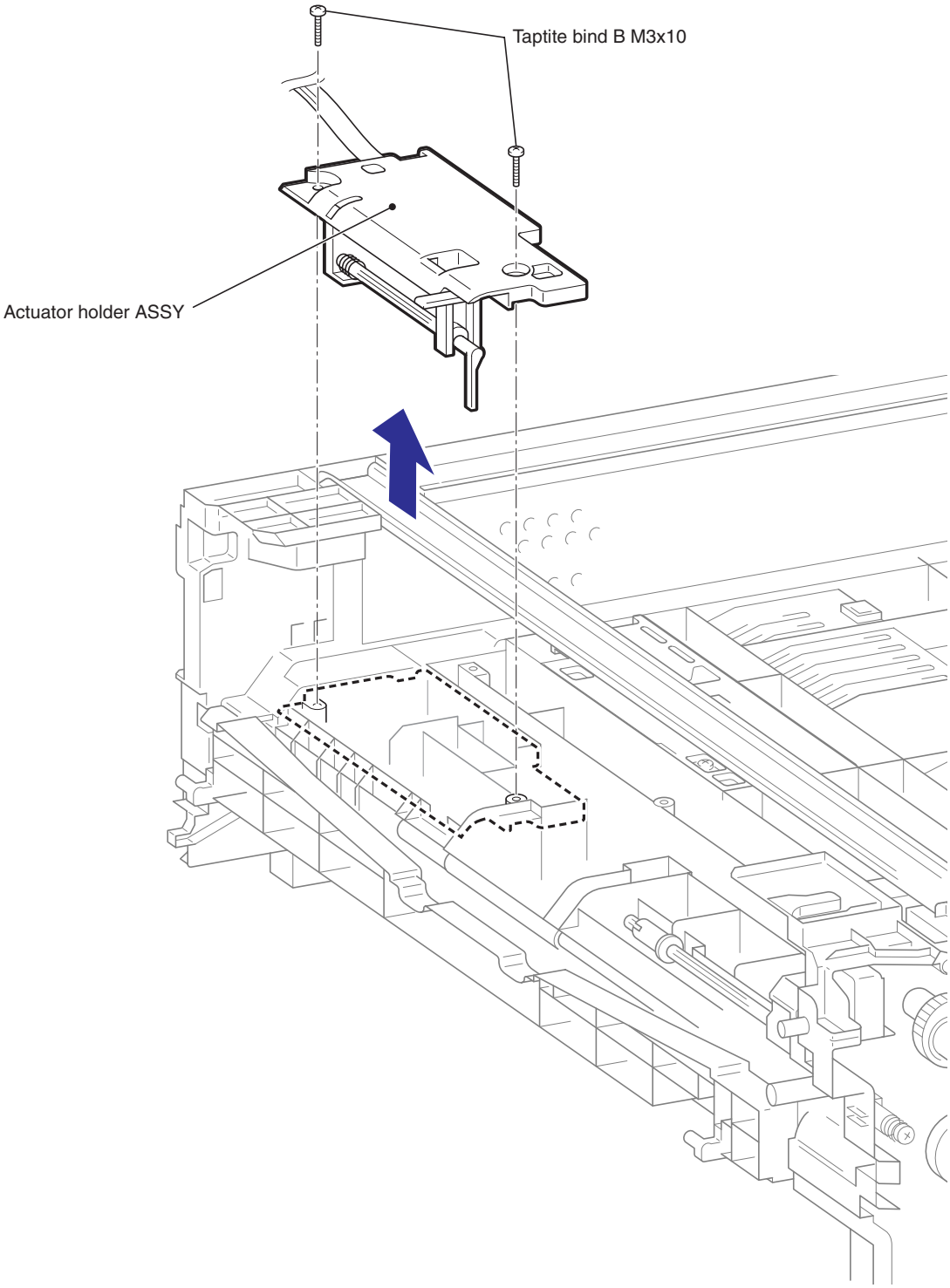

Fig. 3-47

(3) Remove the Registration actuator spring from the Hook part.

(4) Turn the Registration front actuator at 90 degrees in the direction of counterclockwise as the arrow 4 shown below.

(5) Slide the Registration front actuator to remove the Registration front actuator from the Actuator holder ASSY.

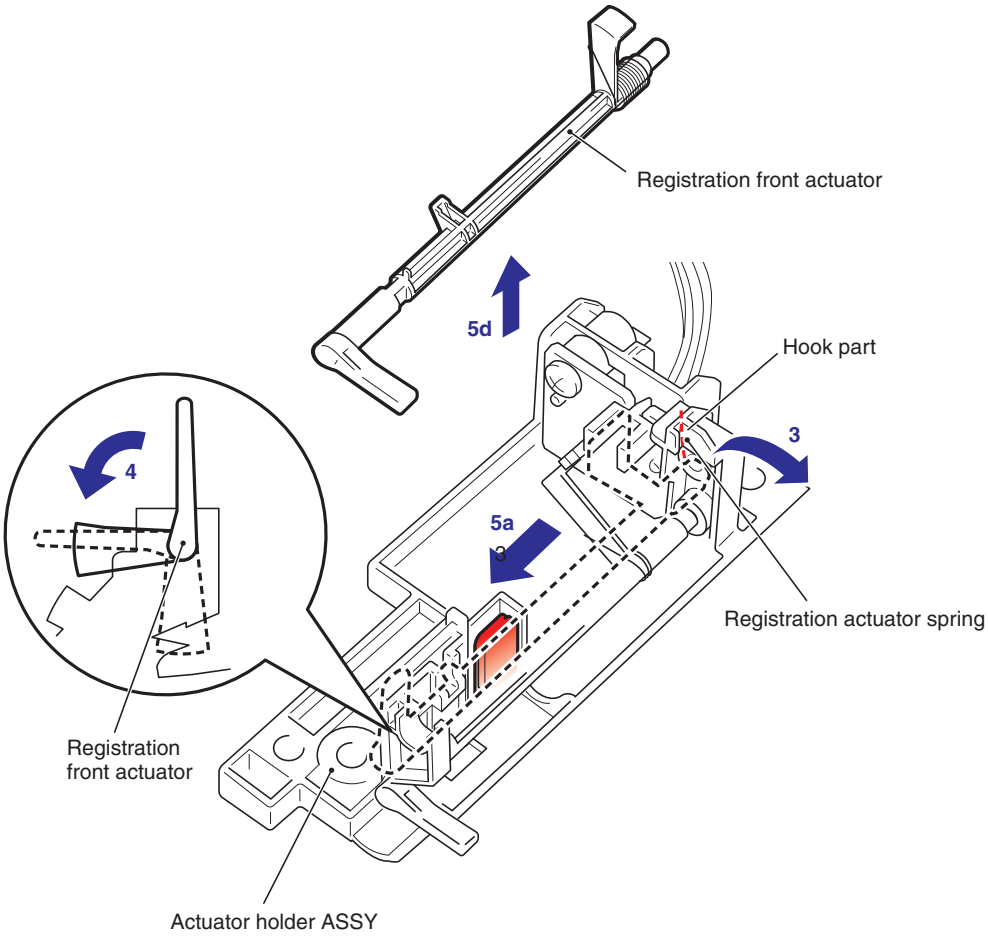

Fig. 3-48

(6) Loosen the tip of the Edge actuator spring from the Actuator holder ASSY.

(7) Release the Hook and Slide the Edge actuator to remove the Edge actuator from the Actuator holder ASSY.

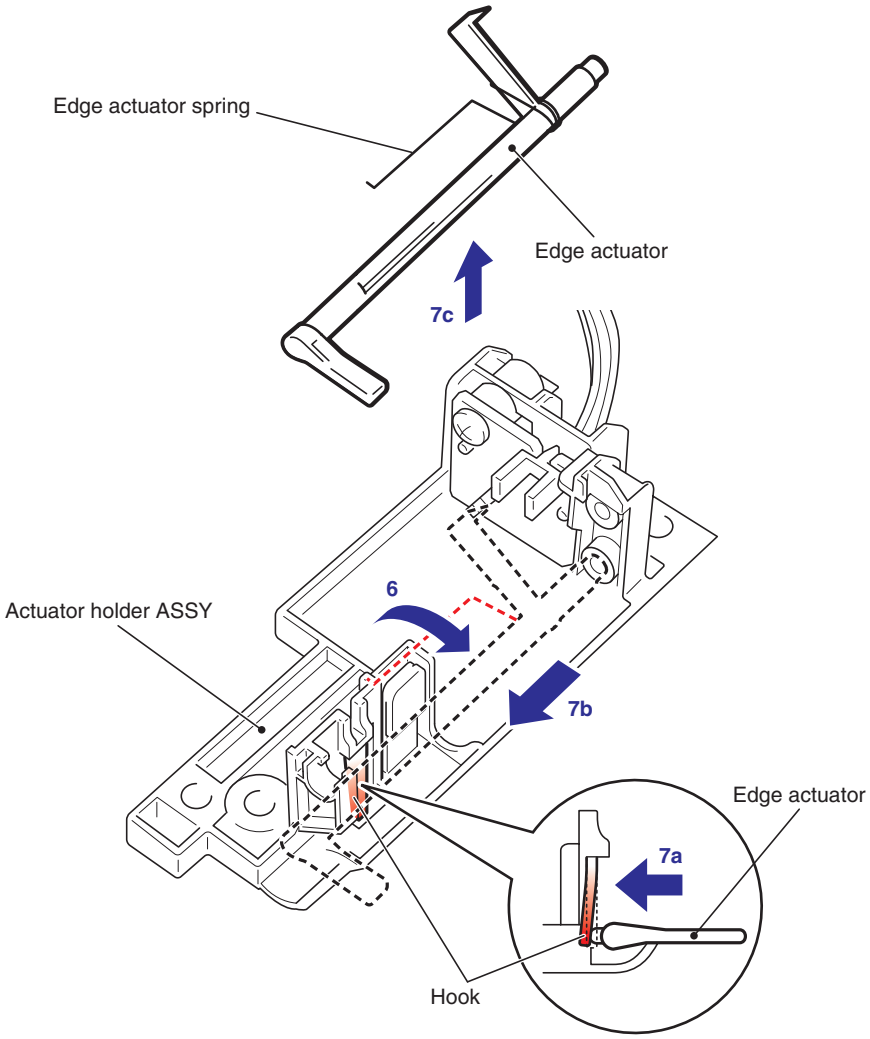

Fig. 3-49

(8) Remove the Taptite bind B M3x10 screw, and then remove the Registration front sensor PCB ASSY from the Actuator holder ASSY.

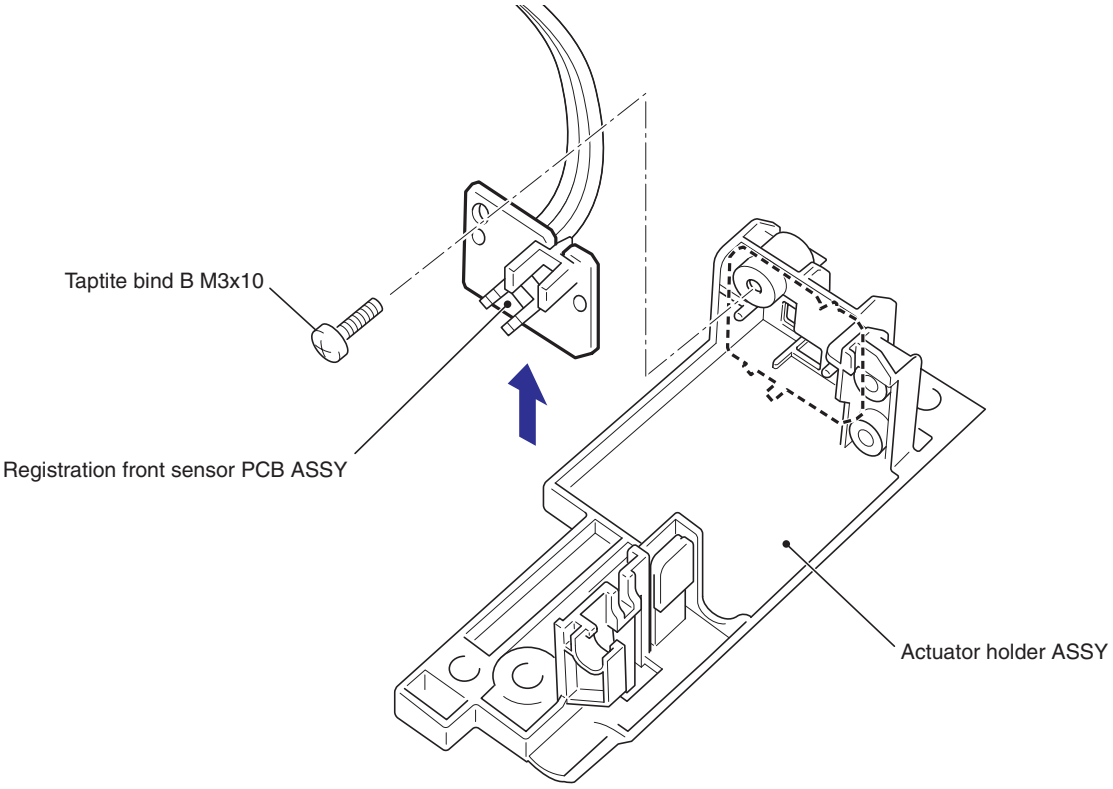

Fig. 3-50

Confidential

8.24 REGISTRATION REAR SENSOR PCB ASSY

(1) Remove the Harness of the Registration rear sensor PCB ASSY from the Guide part of Main body.

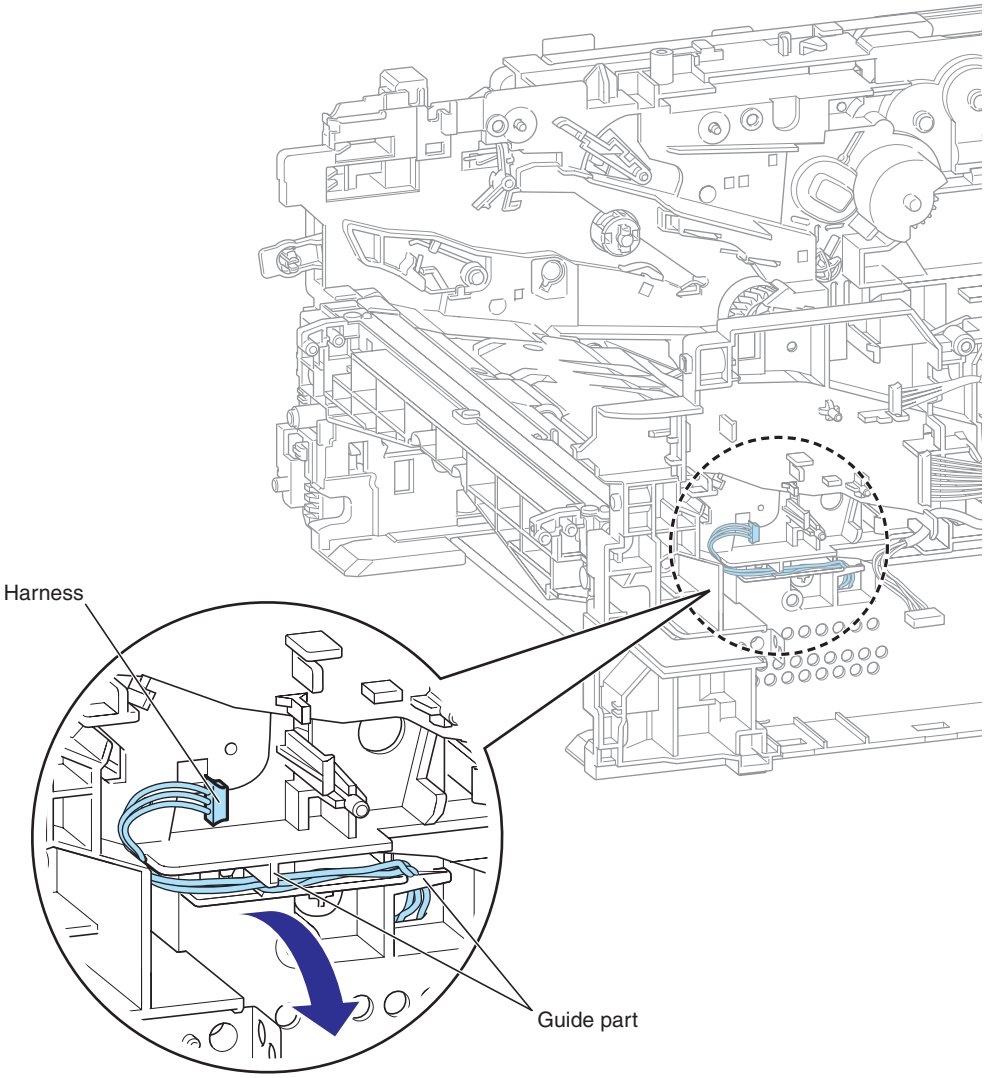

Fig. 3-51

Confidential

(2) Remove the two Taptite bind B M3x10 screws, and then remove the Rear actuator holder ASSY from the Main body.

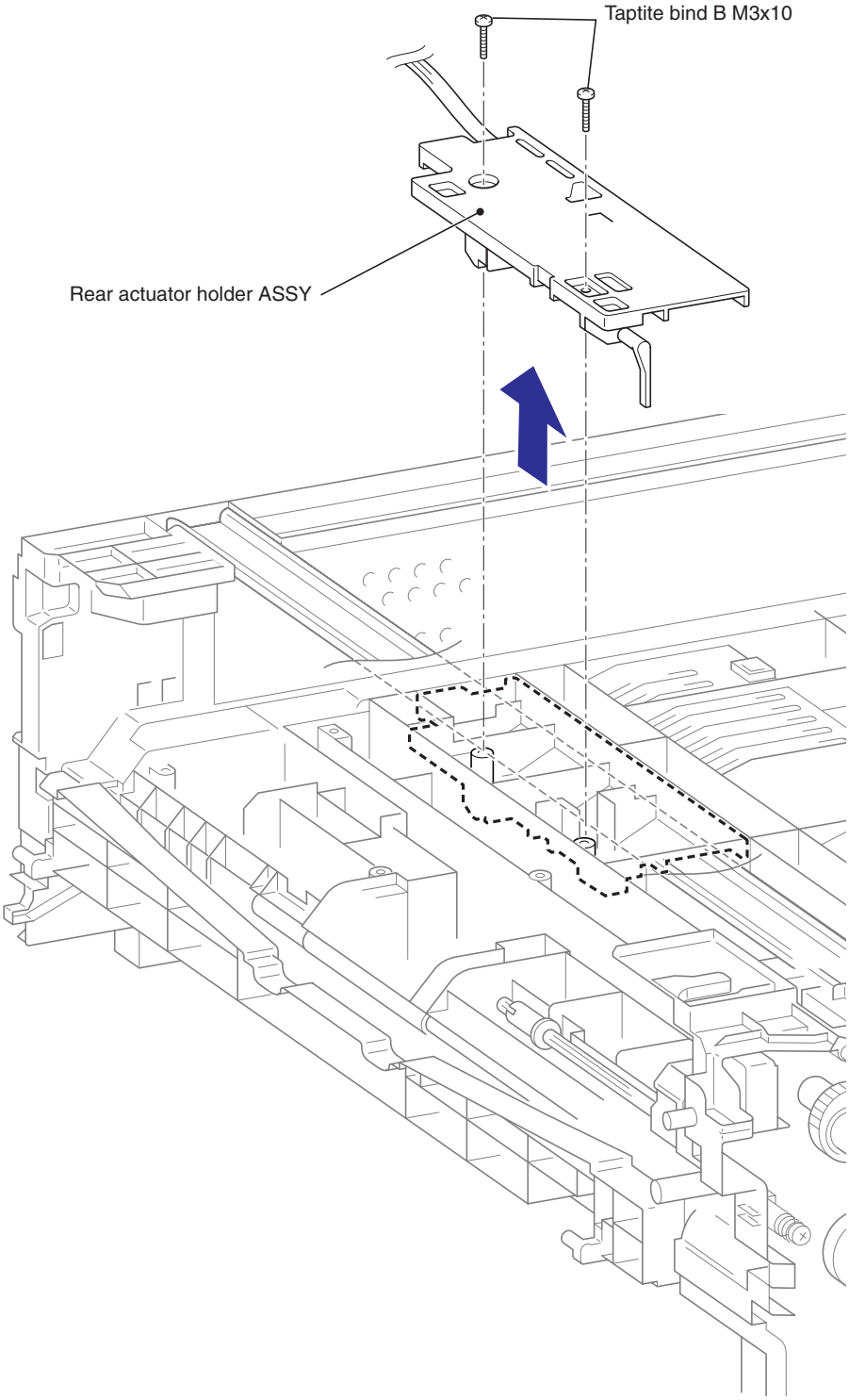

Fig. 3-52

(3) Remove the Actuator spring rear from the Hook part.

(4) Turn the Registration actuator rear.

(5) Slide the Registration actuator rear to remove the Registration actuator rear from the Rear actuator holder ASSY.

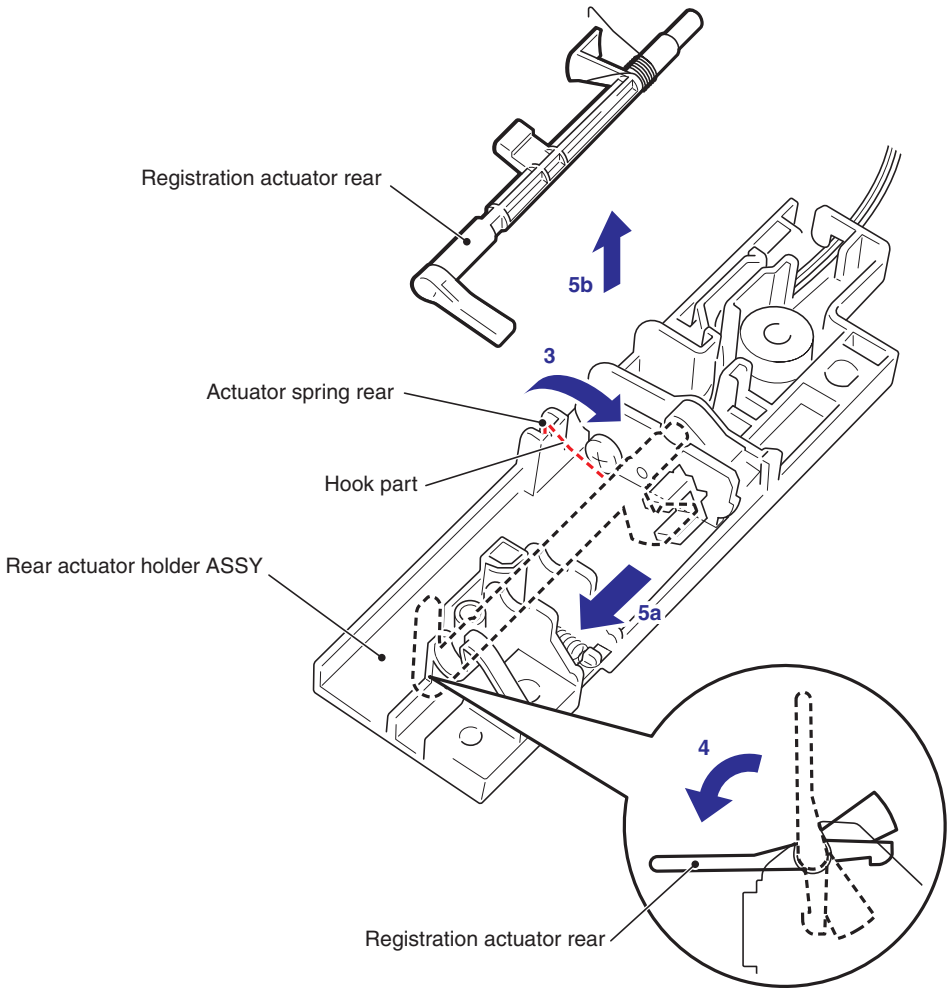

Fig. 3-53

(6) Remove the Taptite bind B M3x10 screw, and then remove the Registration rear sensor PCB ASSY from the Rear actuator holder ASSY.

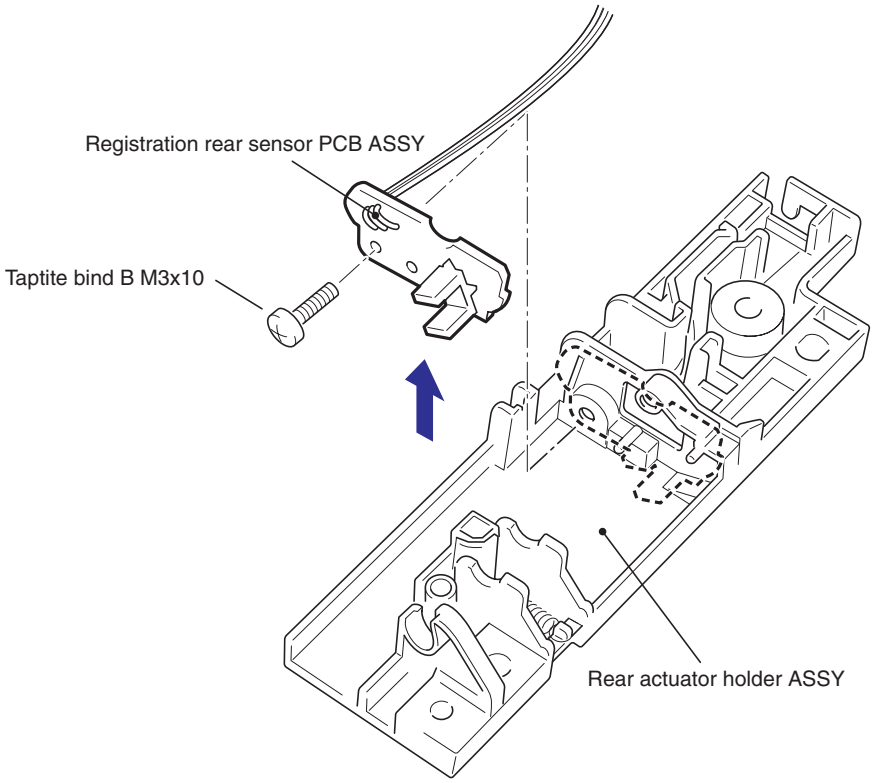

Fig. 3-54

Confidential

8.25 DRIVE SUB ASSY

(1) Remove the Taptite cup S M3x6 SR screw and the Taptite bind B M4x12 screw, and then remove the Under FG wire from the Main body.

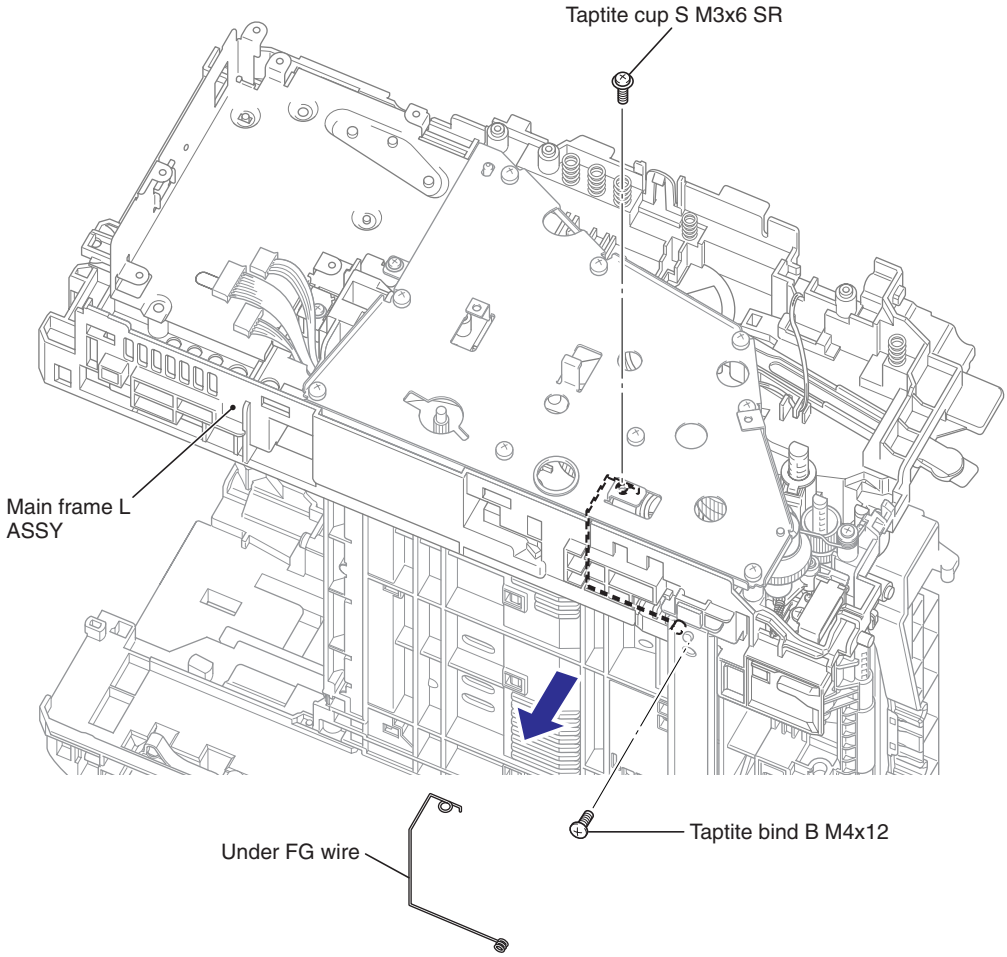

Fig. 3-55

Confidential

(2) Remove the Taptite cup S M3x6 SR screw and the nine Taptite bind B M4x12 screws, and then remove the Drive sub ASSY from the Main body.

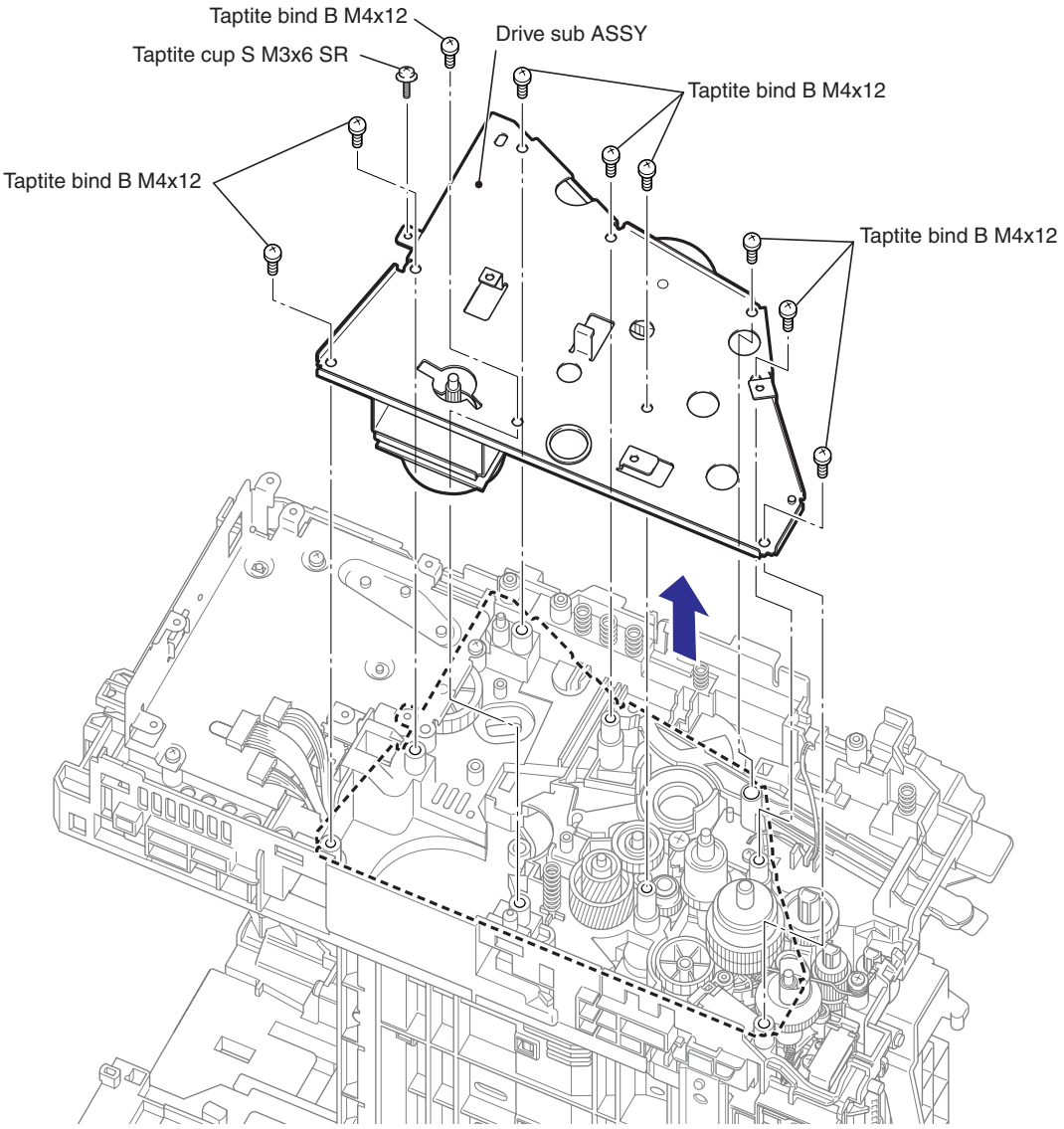

Fig. 3-56

CAUTION:

When removing the Drive sub ASSY, put the left side of the Main body as the top as shown in the above figure because there is risk of the fall of the gears.

8.26 DEV JOINT / DEV GEAR JOINT/53R / REGISTRATION PENDULUM GEAR SPRING

(1) Remove the DEV joint and the DEV joint spring from the DEV gear joint/53R.

(2) Remove the DEV gear joint/53R from the Drive sub ASSY.

(3) Remove the Registration pendulum gear spring from the Drive sub ASSY.

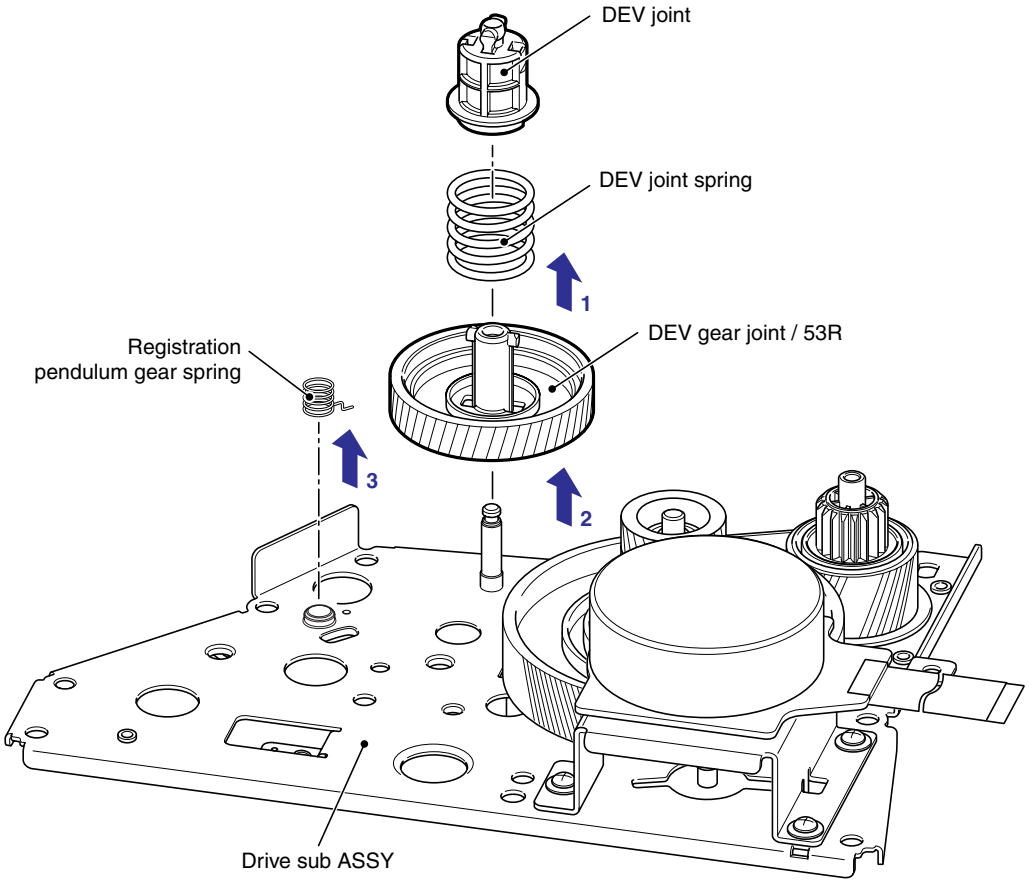

Fig. 3-57

Confidential

8.27 TONER SENSOR PCB UNIT ASSY

(1) Remove the Taptite bind B M3x10 screw, and then remove the Link stopper and the Toner sensor PCB unit ASSY from the Main body.

(2) Remove the PT sensor holder from the Toner sensor PCB unit ASSY.

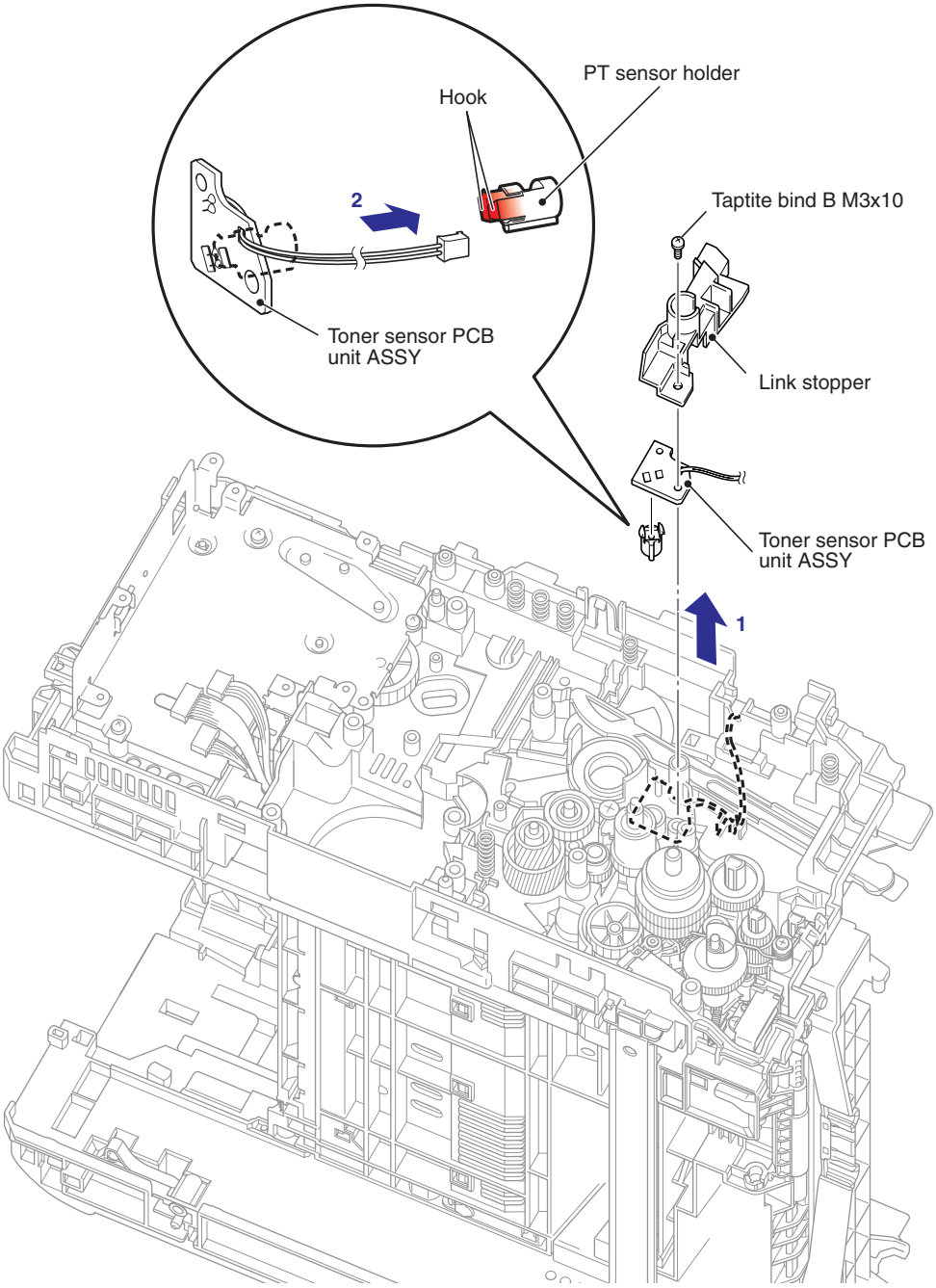

Fig. 3-58

8.28 REGISTRATION SOLENOID / T1 SOLENOID

8.28.1 REGISTRATION SOLENOID

(1) Remove the T1 sector gear spring from the T1 gear 38/31 sector.

(2) Remove the T1 gear 38/31 sector from the Main body.

(3) Release the Hook to remove the Registration gear 25 terminal from the Main body.

(4) Remove the Registration differential gear ASSY from the Main body.

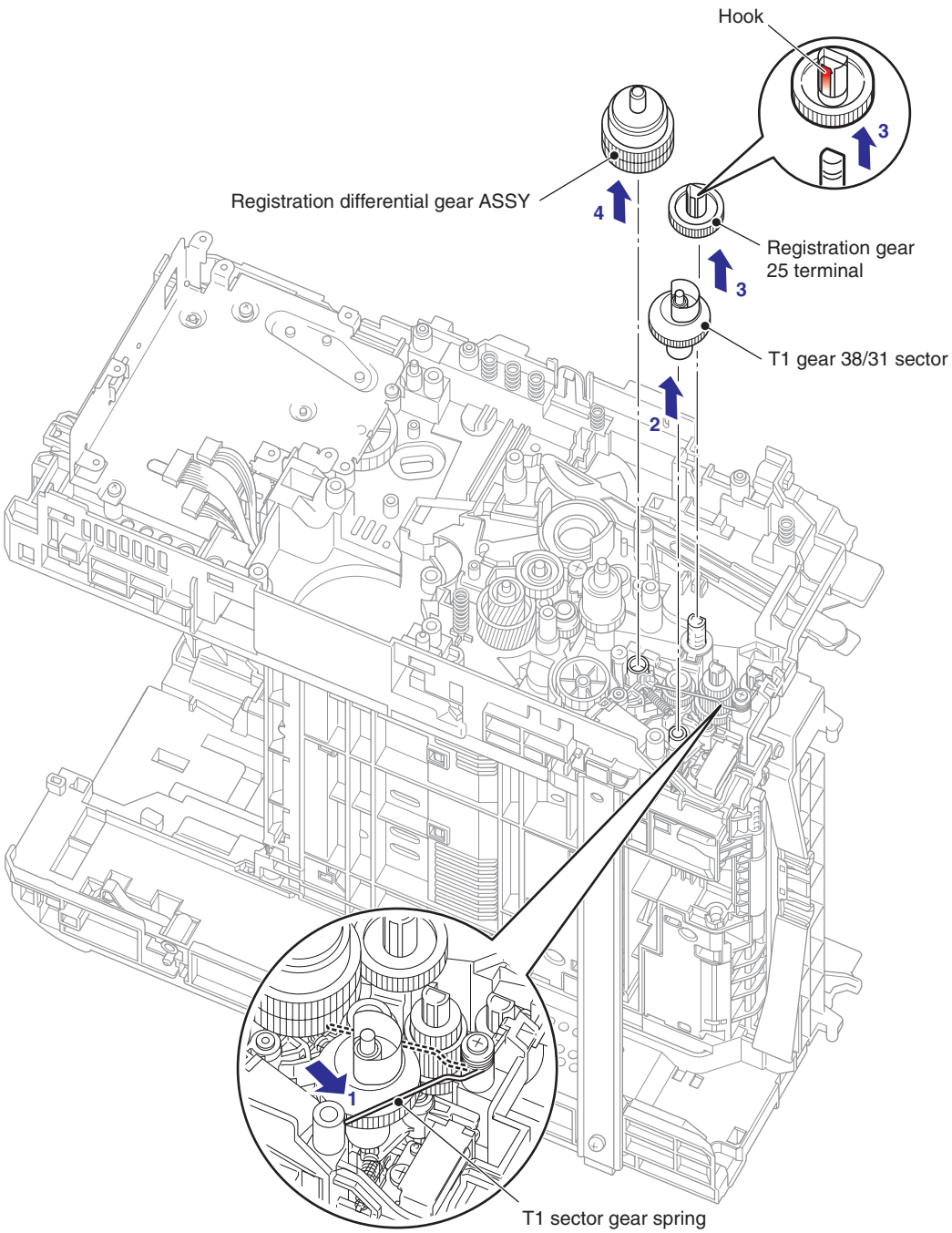

Fig. 3-59

CAUTION:

Be carefull, because the inside gear of the Registration differential gear ASSY is easy to fall.

(5) Remove the Registration solenoid lever spring from the Main body and Registration solenoid lever.

(6) Remove the Harness from the guide part of Main body.

(7) Remove the Taptite bind B M3x10 screw, and then remove the Registration solenoid from the Main body.

(8) Remove the Registration solenoid lever from the Registration solenoid.

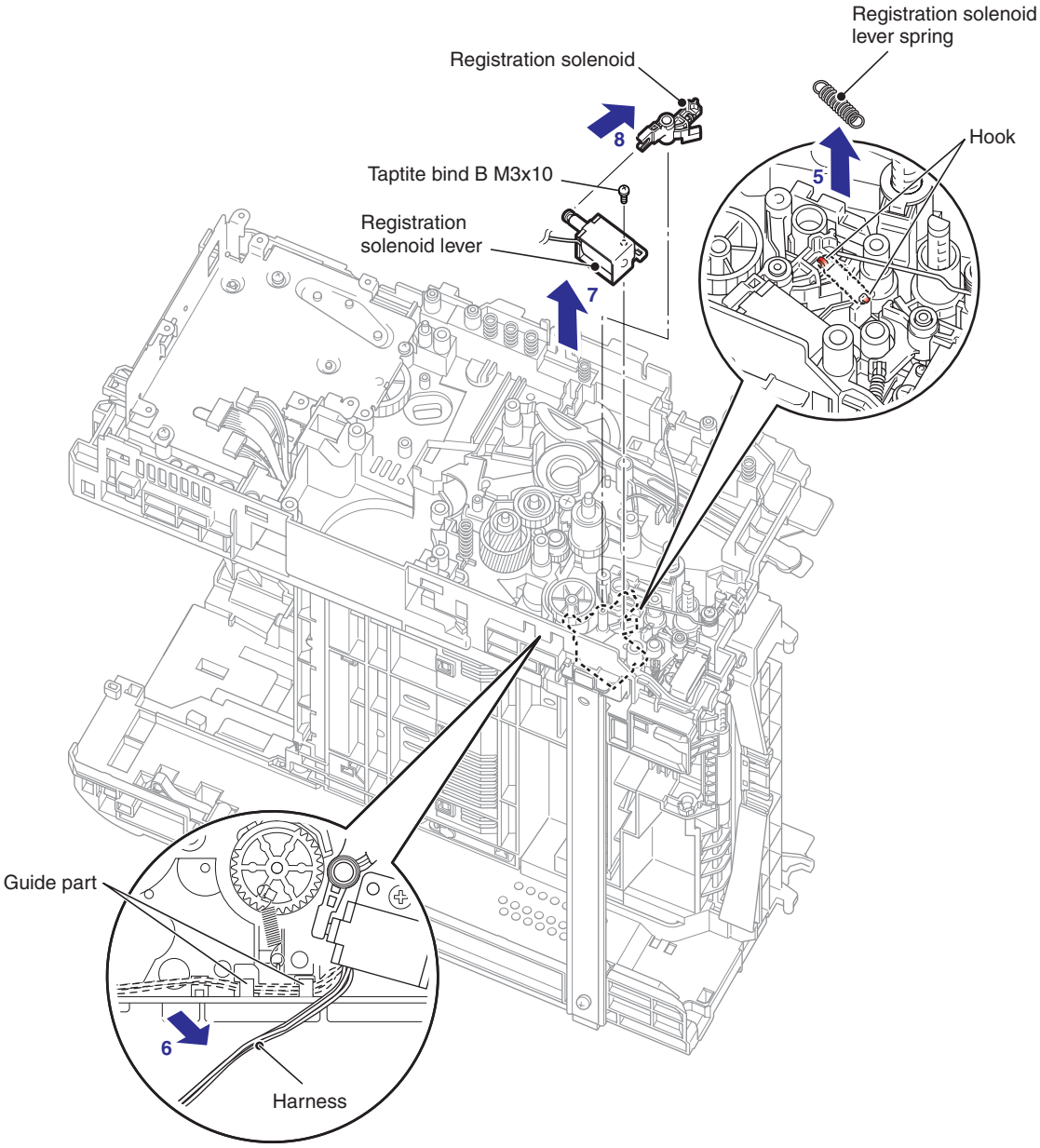

Fig. 3-60

8.28.2 T1 SOLENOID

(1) Remove the T1 solenoid lever spring from the Main body and T1 solenoid lever.

(2) Remove the Harness from the Guide part of the Main body.

(3) Remove the Taptite bind B M3x10 screw, and then remove the T1 solenoid from the Main body.

(4) Remove the T1 solenoid lever from the T1 solenoid.

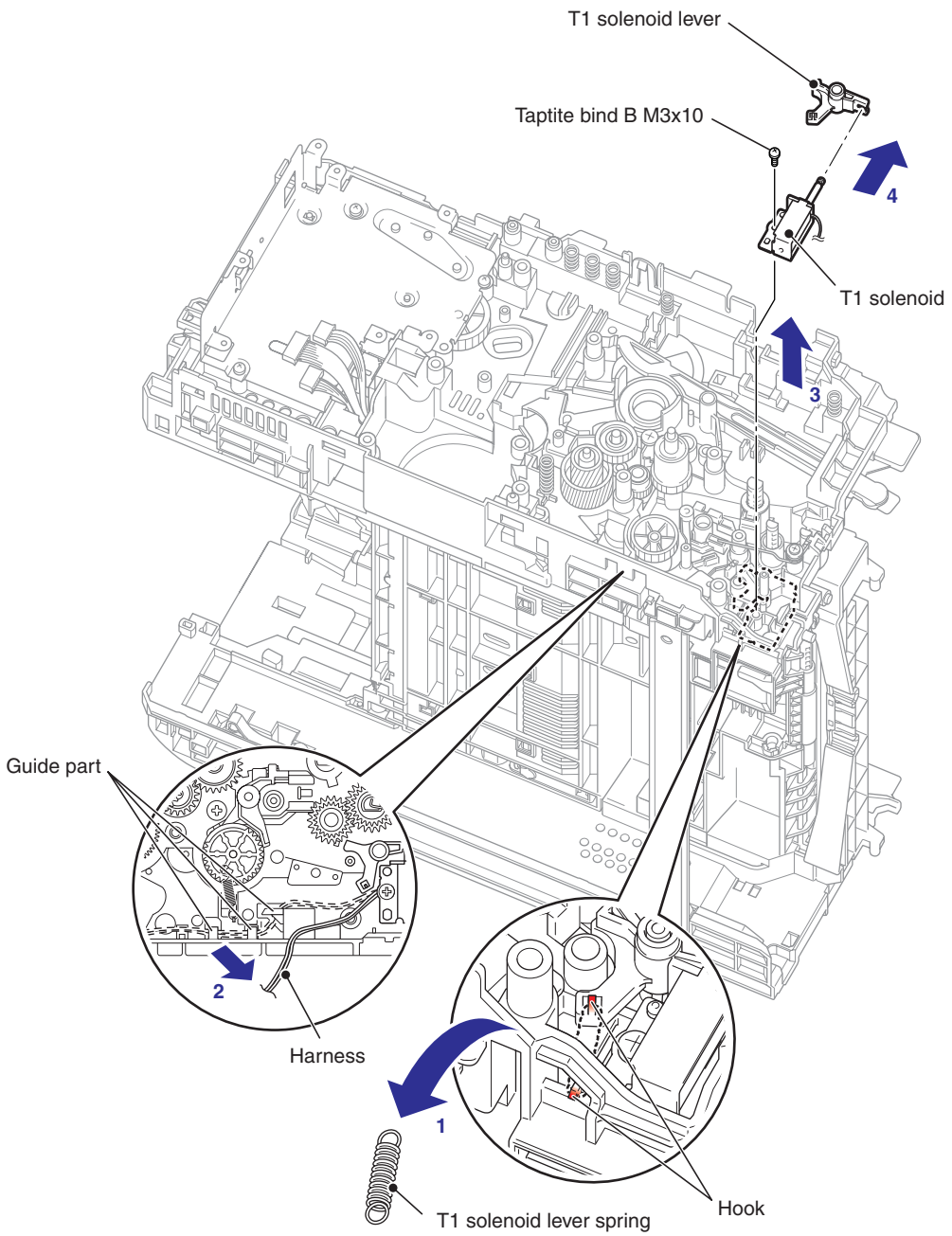

Fig. 3-61

8.29 MAIN SHIELD PLATE / EJECT SENSOR PCB ASSY

(1) Remove the three Taptite bind B M3x10 screws, and then remove the FU front paper guide from the Main body.

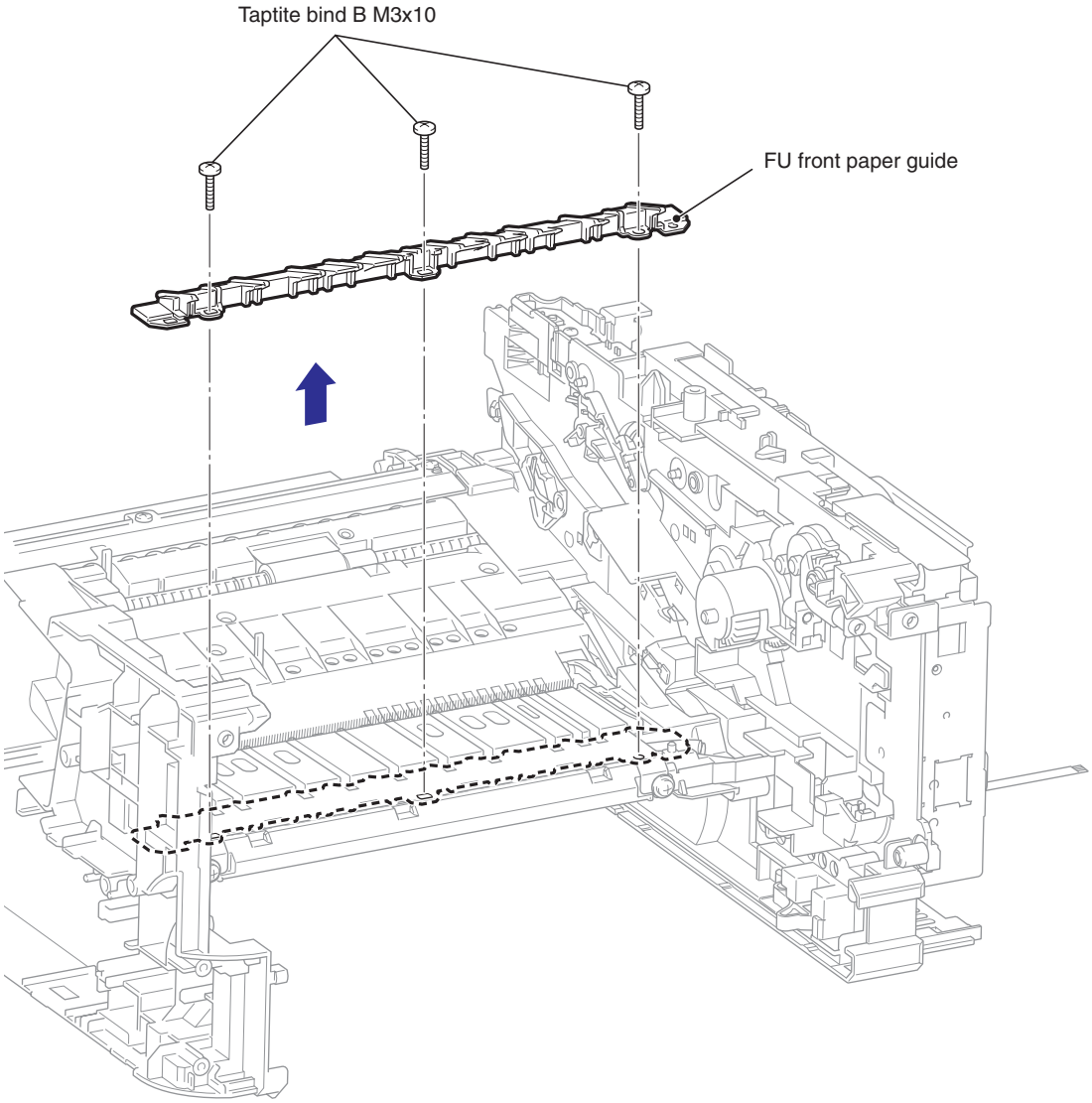

Fig. 3-62

Confidential

(2) Remove the two Taptite cup S M3x6 SR screws, and then remove the Chute ground plate from the Main body.

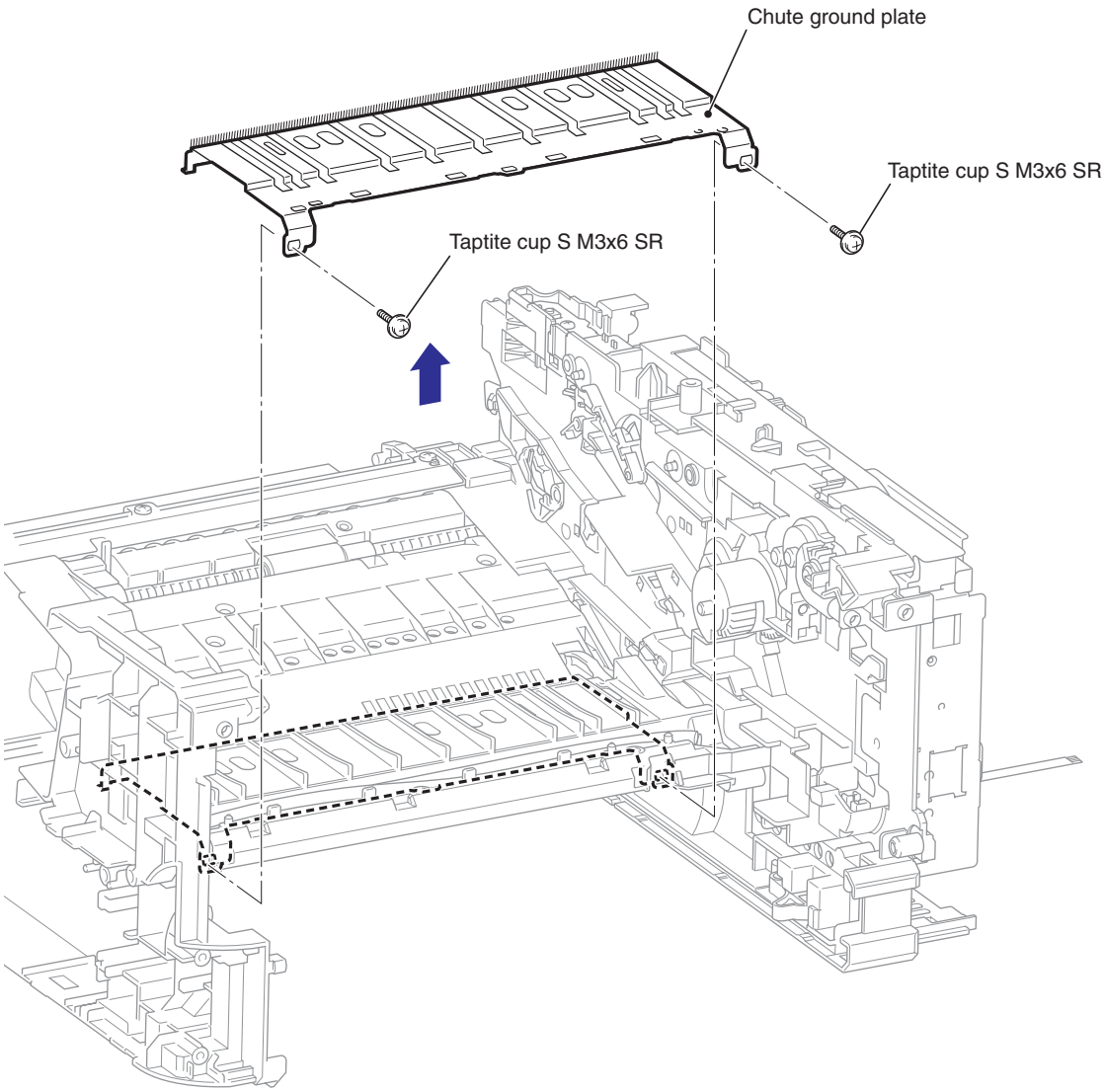

Fig. 3-63

(3) Remove the Main PCB sheet from the Main shield plate.

(4) Remove the three Taptite bind B M4x12 screws, and then remove the Main shield plate from the Main body.

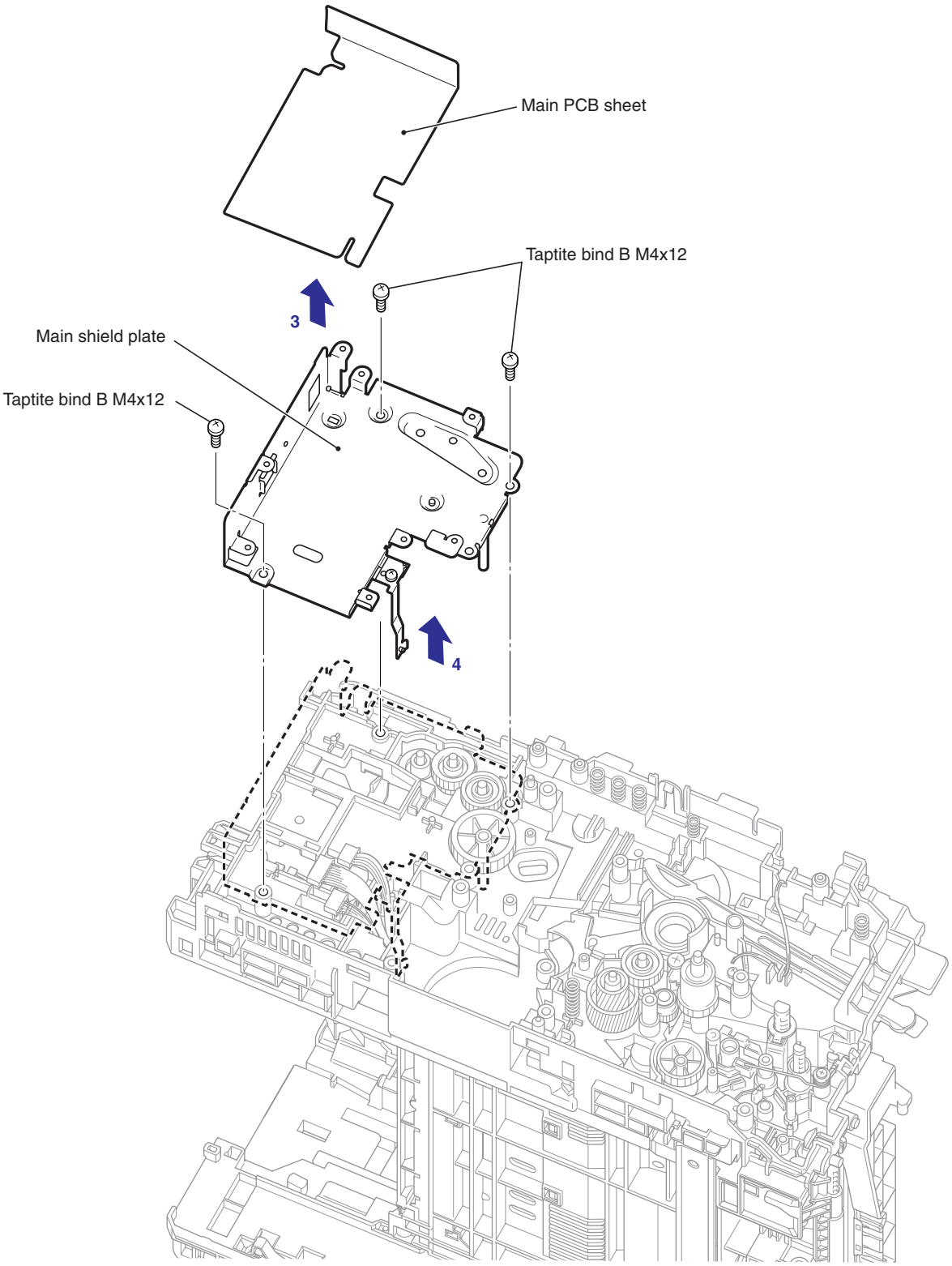

Fig. 3-64

(5) Release the Hook to remove the Eject sensor PCB ASSY from the Main body.

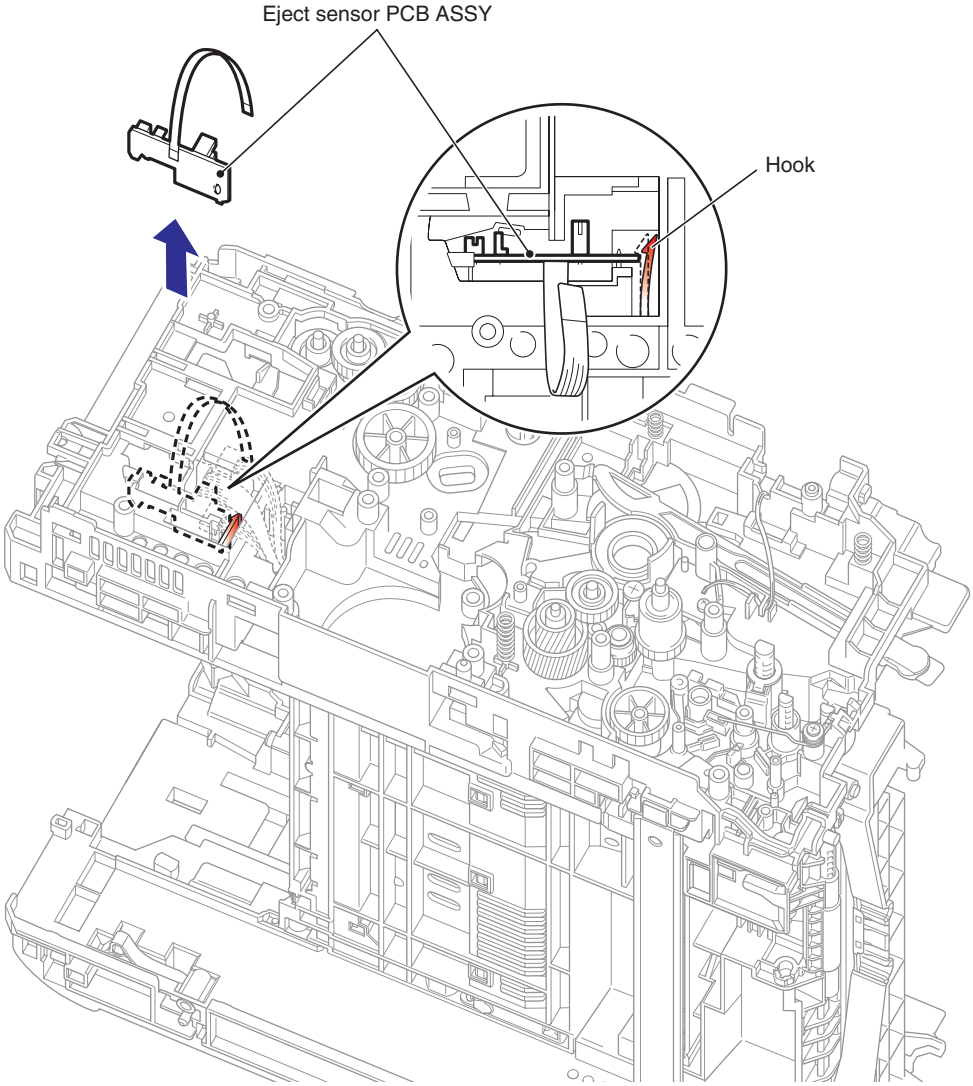

Fig. 3-65

8.30 RUBBER FOOT

(1) Remove the two Rubber feet from the Main body.

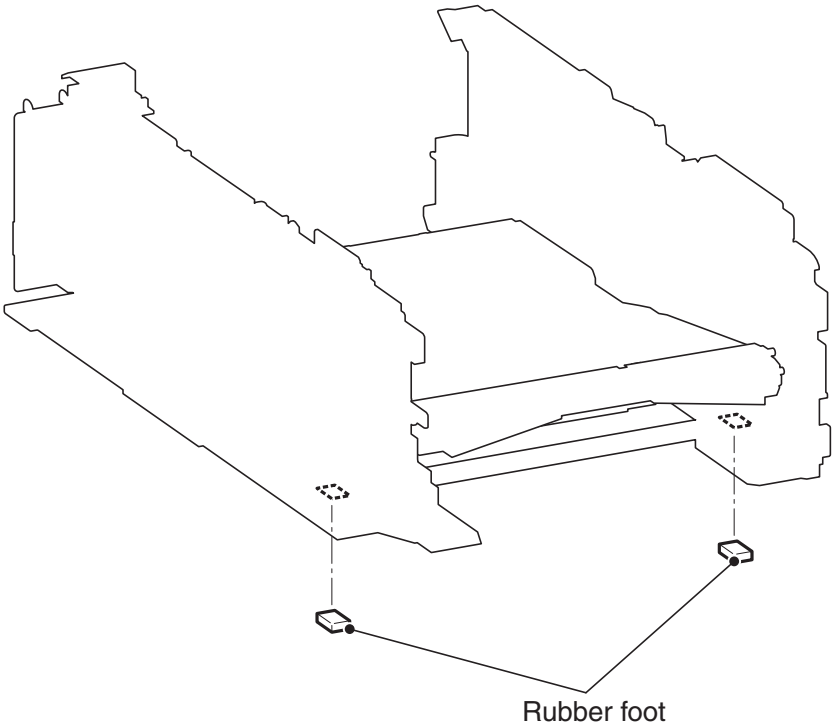

Fig. 3-66

Confidential

Note:
The procedure for disassembling the Main frame L ASSY after "8.17 HIGH-VOLTAGE PS PCB ASSY" is described below.

8.31 MAIN FRAME L ASSY

(1) Remove the three Taptite bind B M3x10 screws, and then remove the FU front paper guide from the Main body.

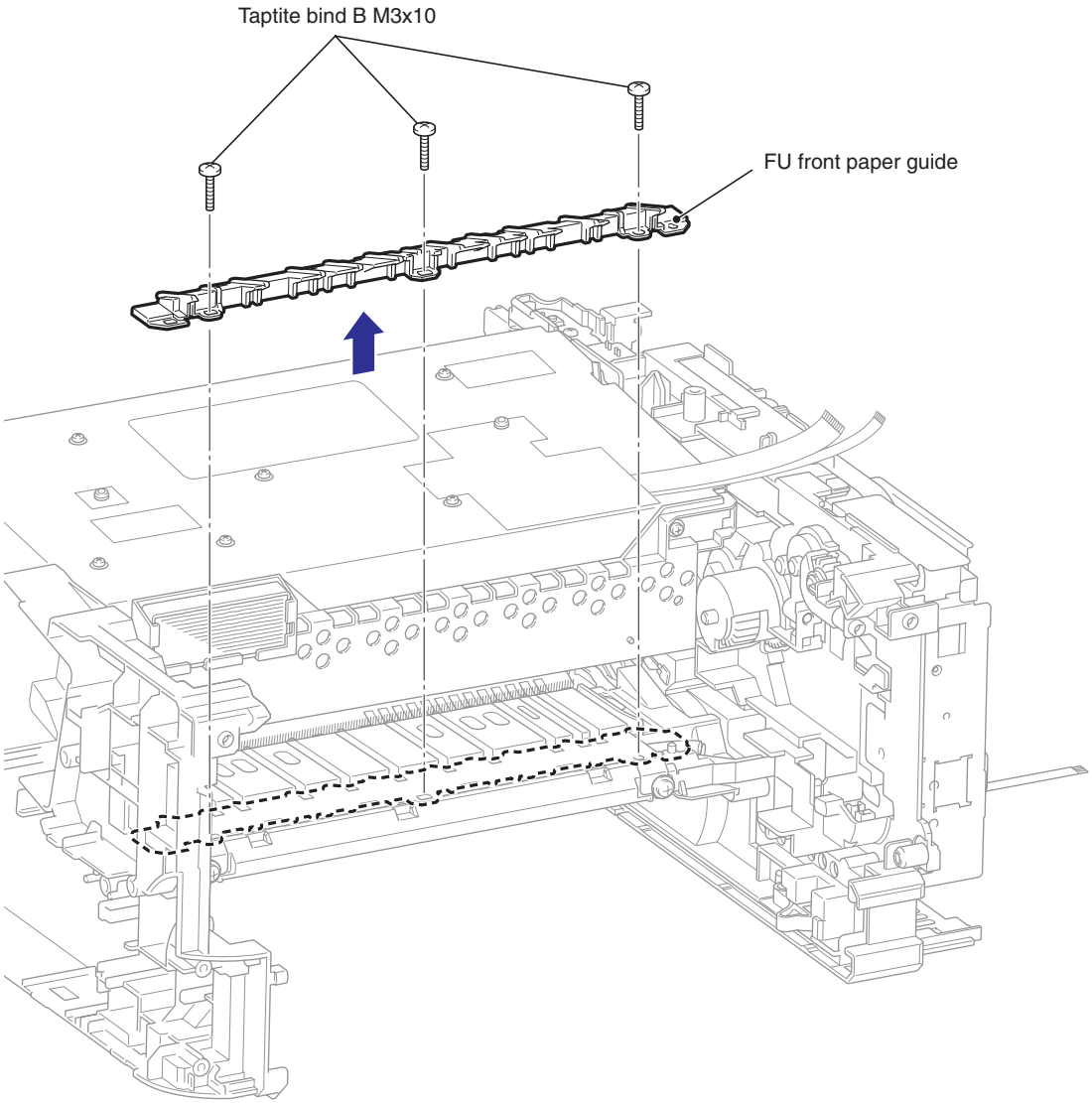

Fig. 3-67

(2) Remove the two Taptite cup S M3x6 SR screws, and then remove the Chute ground plate from the Main body.

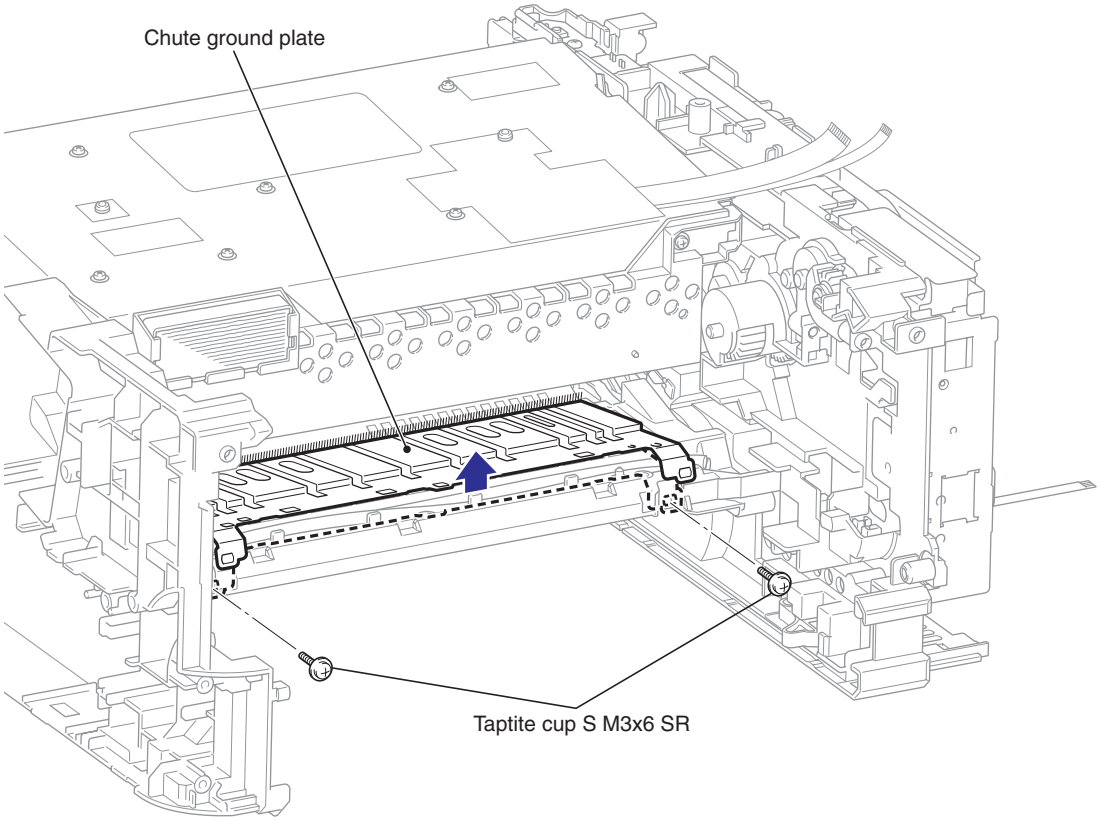

Fig. 3-68

Confidential

(3) Release the Hook to remove the Registration gear 25 terminal, the two Feeder gear 17 terminals and the Bush 6.

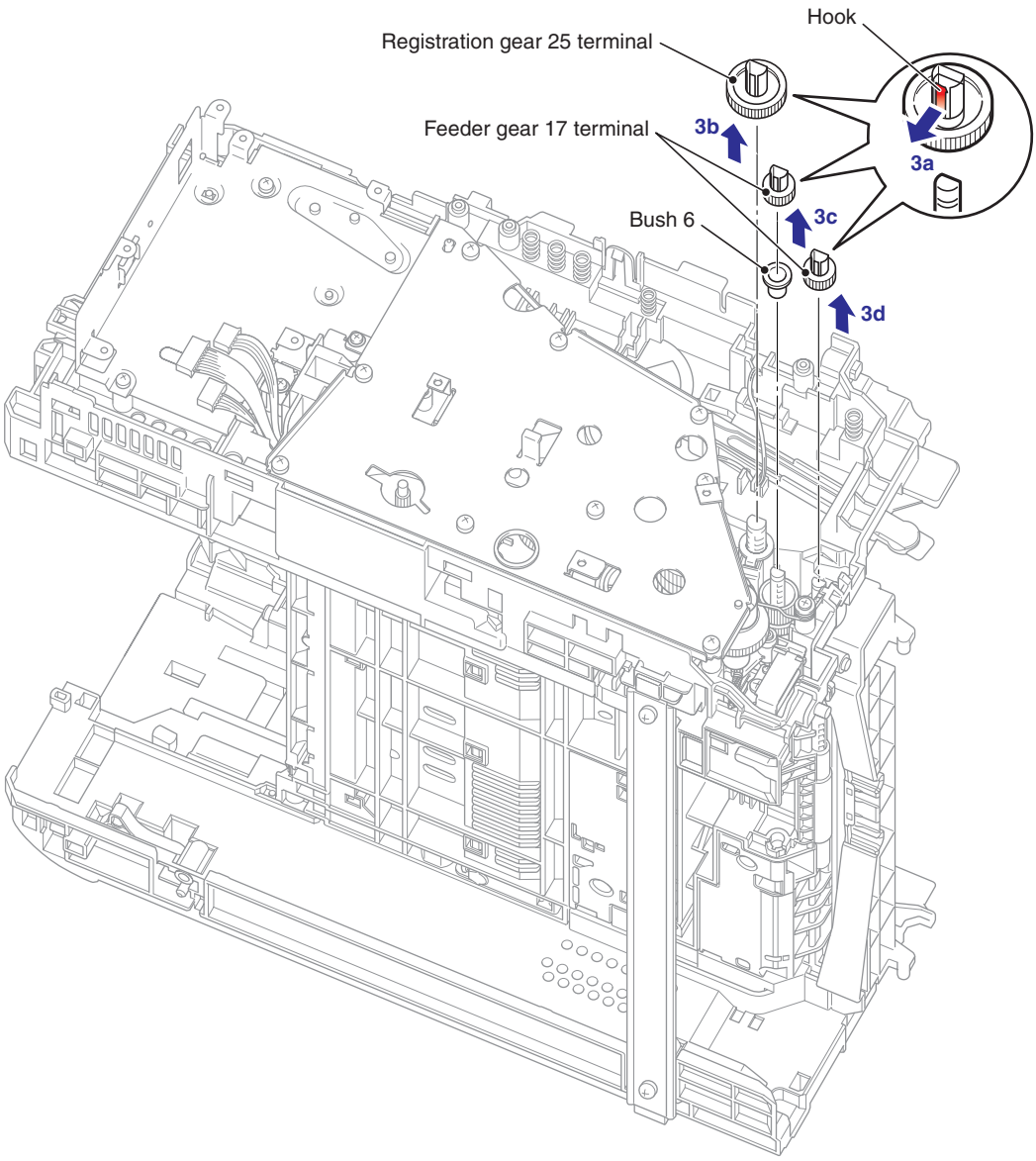

Fig. 3-69

(4) Remove the Taptite cup S M3x6 SR screw and the Taptite bind B M4x12 screw, and then remove the Under FG wire from the Main body.

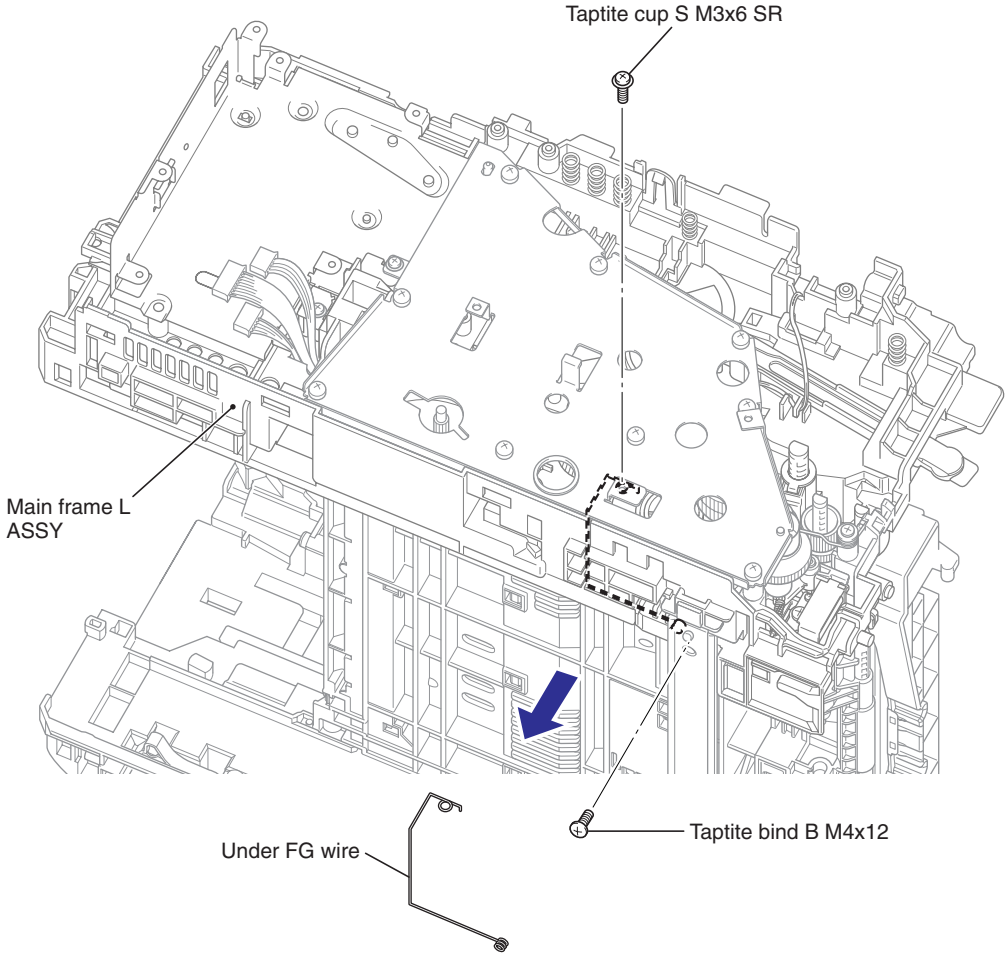

Fig. 3-70

Confidential

(5) Remove the four Taptite bind B M4x12 screws and the two Taptite cup S M3x6 SR screws, and then remove the Main frame L ASSY from the Main body.

Memo :

- Remove the Main frame L ASSY in the state that the DEV joint link is pulled out.

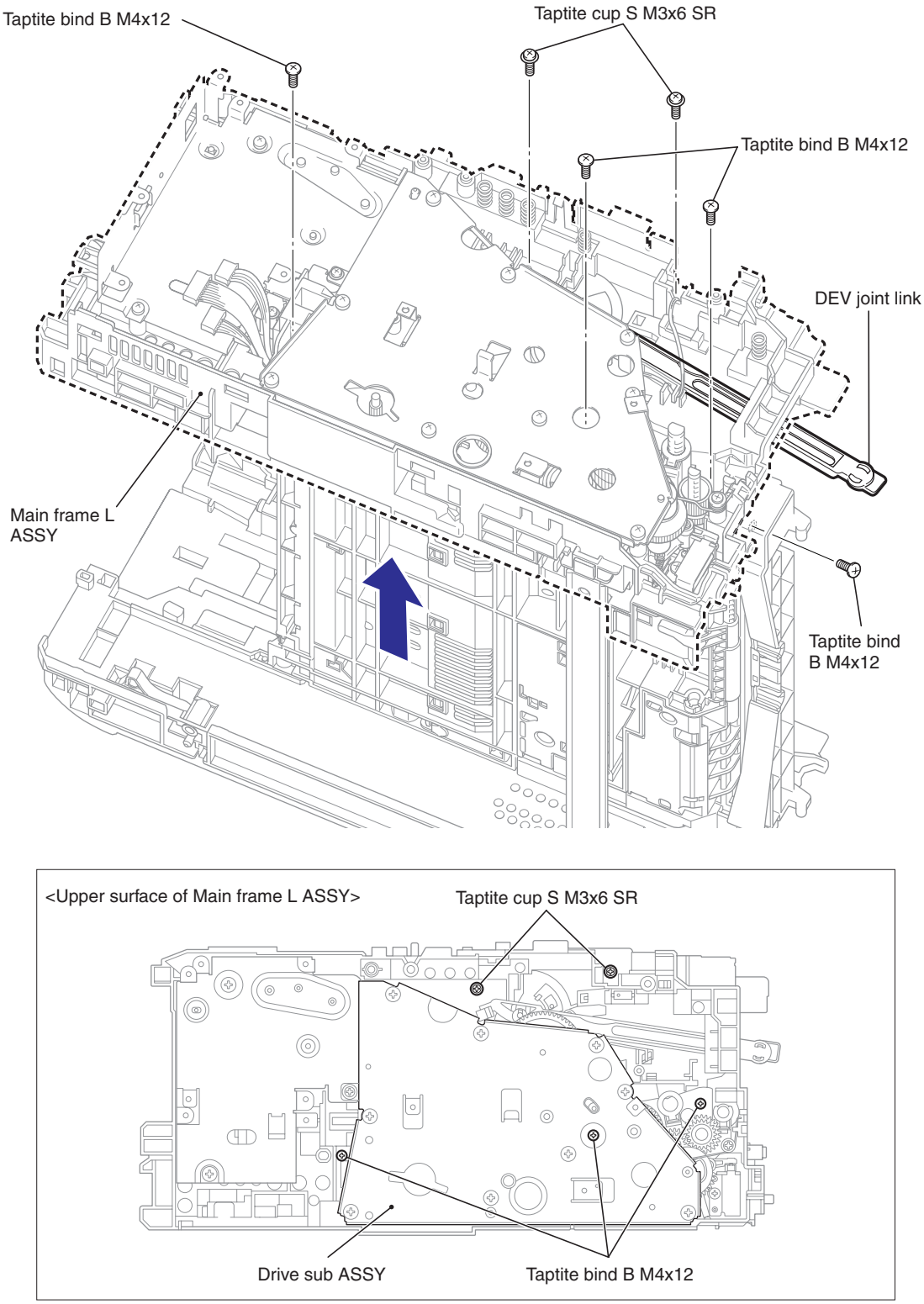

Fig. 3-71

CHAPTER 4 ADJUSTMENTS AND UPDATING OF SETTINGS, REQUIRED AFTER PARTS REPLACEMENT

1. IF YOU REPLACE THE MAIN PCB

<What to do when replacing the main PCB>

- Rewriting the firmware (Main Program)
- Setting the default paper size
- Setting the serial number
- Inputting the adjusted value of the laser scanner
- Setting the toner cartridge type
- Backup to the Main PCB of the Wireless LAN PCB Information (HL-2170W only)

<Which parts to use>

HL-2140	MAIN PCB ASSY 2140 FW:MAIN CONTROLLER 2140
HL-2150N	MAIN PCB ASSY 2150N FW:MAIN CONTROLLER 2150N
HL-2170W	MAIN PCB ASSY 2170W FW:MAIN CONTROLLER 2170W

Main PCB: The table below shows the ROM type.

Model	Main PCB (For a production part/For a supplied part.)
HL-2140	512 Kbyte Flash ROM x 1
HL-2150N	8 Mbyte Flash ROM x 1
HL-2170W	8 Mbyte Flash ROM x 1

<What you need to prepare>

(1) Computer (Windows® XP or later)
Create the "hl2100" folder in the C drive, for example.

(2) HL-2140/2150N/2170W target machine

(3) Firmware

Main Program : LZXXXX_$.blf	LZXXXX: First six digits are a parts number of the firmware. $: Alphabet representing the revision of the firmware

(4) Maintenance Tool (MAINTE.zip)
Copy it into the "hl2100" folder that has been created in the C drive. Extract the copied file and run "brmainte.exe" file by double-clicking.

(5) USB cable (one piece)

(6) Setting file of the default paper size
s2100EUR.pjl (A4 size), s2100USA.pjl (Letter size)
s2100ISR.pjl (A4 size, Israeli font for Israel)
* No PJL file is required for China

(7) Download Utility (FILEDG32.EXE)
Copy it into the "hl2100" folder that has been created in the C drive.

(8) Brother Maintenance USB Printer Driver
Copy it into the "hl2100" folder that has been created in the C drive. Extract the copied file.

Refer to the following page for the next procedures.

■ Rewriting the firmware (Main Program)

<Installing the maintenance printer driver>

To identify terminals connected via USB interface, the PC requires the corresponding virtual USB devices to be implemented by driver. If you connect any number of the machine to your PC, therefore, the same number of virtual USB devices will be automatically configured on your PC. To prevent virtual USB devices from being configured limitlessly, use the unique driver installation procedure described below that enables your PC to identify terminals via single virtual USB device.

Once this installation procedure is carried out for the PC, no more driver installation will be required for that PC to identify machines. If BHL2 Maintenance Driver is already installed to your PC, fully uninstall the BHL2 Maintenance Driver before installing Brother Maintenance USB Printer Driver.

(1) Check that the power switch of the machine is turned off. Disconnect the USB cable that connects the machine with PC.

(2) Turn on your PC.

(3) Open the front cover, and turn the power supply of the machine on while holding down the SW supporter. Make sure that the Toner/Drum/Error LED lights up.

(4) Release the SW supporter, and then make sure that all LEDs are off.

(5) Press the SW supporter for the 2 seconds, and the Error LED lights up.

(6) Click the “maintenance.exe” of the Printer Maintenance Driver which has been copied in the “hl2100” folder to start.

(7) The following screen appears, indicating the detection of device installation wizard. Click Next to proceed.

Confidential

(8) Alert warning message of WHQL appears three times. Click Continue Anyway to proceed.

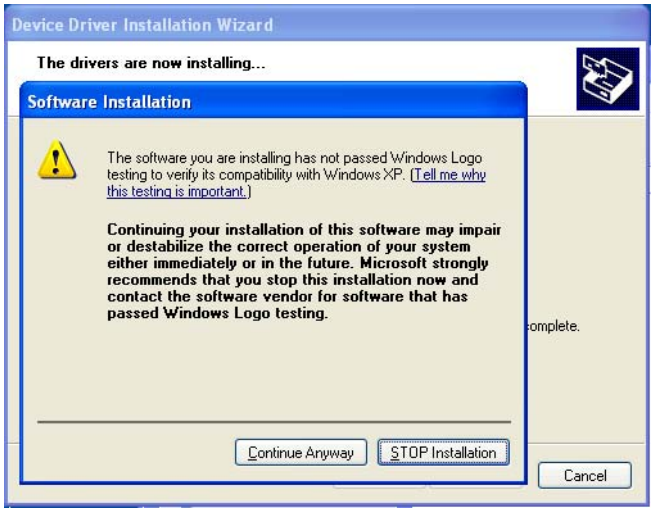

(9) If the device driver is successfully installed, the following message screen appears. Click Finish to return.

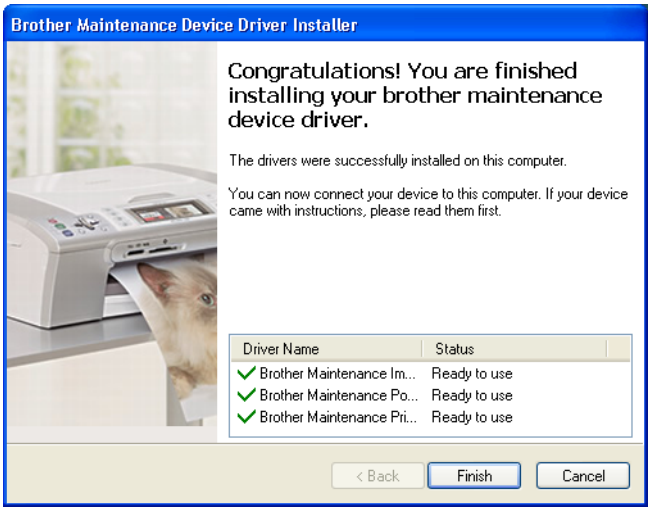

(10) Connect the machine to your PC using the USB cable.

(11) Select “Install the software automatically (Recommended)” and click Next.

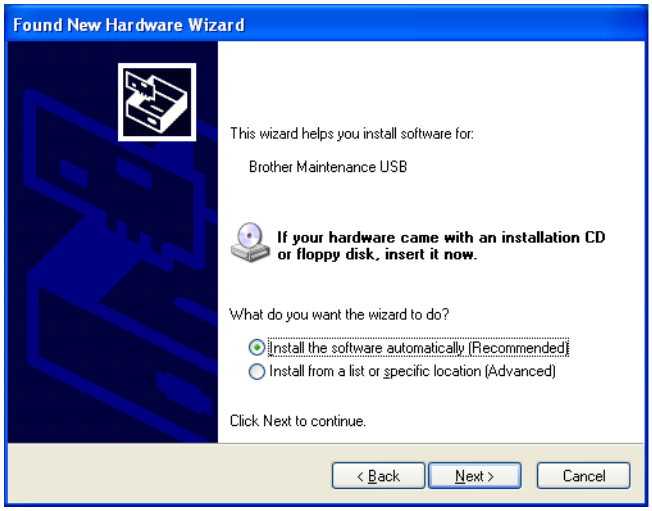

(12) Alert warning message of WHQL appears. Click Continue Anyway to proceed.

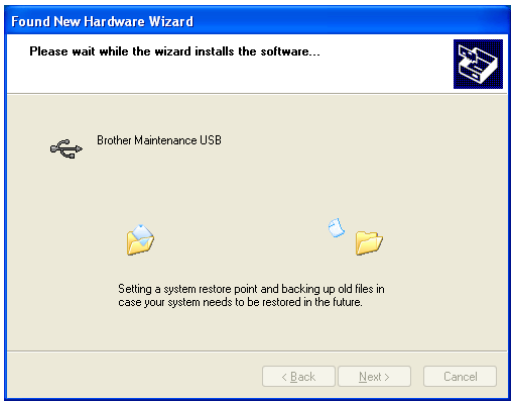

(13) If the Brother Maintenance USB Printer driver is successfully installed, the following message screen appears. Click Finish to return.

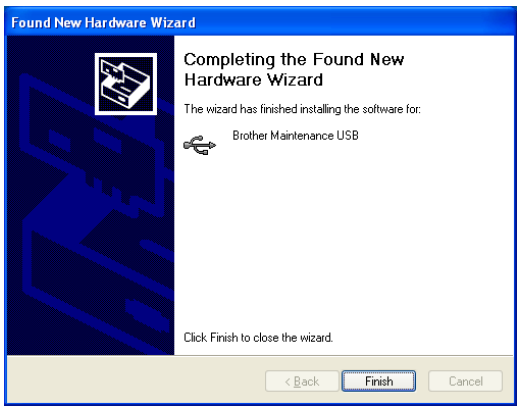

Confidential

<Procedures>

After the installation procedure of the Brother Maintenance USB Printer driver is completed, refer to the following steps for the detailed procedures to rewrite the program files. If the Brother Maintenance USB Printer Driver has already been installed to your PC, start to rewrite the program files.

(1) Connect the PC and machine with the USB cable.

(2) Open the front cover, and turn the power supply of the machine on while holding down the SW supporter. Make sure that the Toner/Drum/Error LED lights up, and release the SW supporter, Make sure that all LEDs are off, and press the SW supporter four times. Then, make sure that the Toner/Drum/Error LED lights up, and close the front cover. (The USB serial number is fixed to “B01234567890”.)

(3) Start the PC. When doing this operation at the first time, the Plug & Play program is performed, and the driver is installed.

(4) Open the “hl2100” folder and double-click the FILEDG32.EXE icon to start. Make sure that there is the printer icon of the connected machine, and that no error occurs.

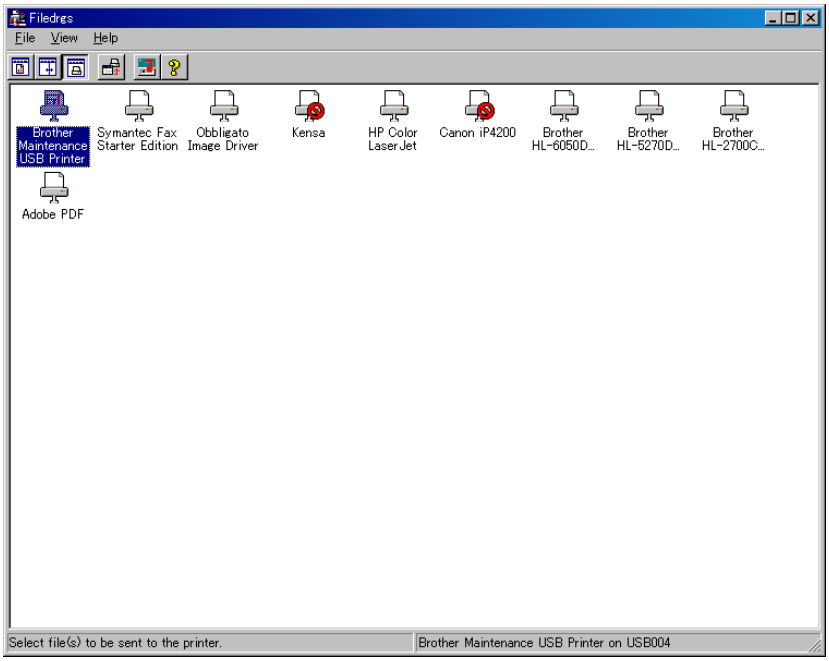

(5) Click the Brother Maintenance USB printer driver in FILEDG32 to select.

(6) Drag the firmware (LZ.....) in the same folder and drop it onto the icon of the applicable model in FILEDG32.
The files in the firmware are sent to the machine so that they are started to write into the flash ROM automatically. After finishing receiving the files, the machine starts to rewrite the firmware.
The Ready LED and Error LED blink irregularly while the firmware being rewritten. The [Go] / Toner / Drum / Error LEDs light up when rewriting the firmware is completed. Be sure not to disconnect the USB cable or to turn off the power supply of the PC before the rewriting is completed.

(7) Turn the power supply of the machine off.

■ Setting the default paper size

<Procedures>

(1) Open the "hl2000" folder and double-click the FILEDG32.EXE icon to start. Select the applicable machine and click it. (Make sure that there is the icon of the connected machine and that no error occurs.)

(2) Drag "s2100EUR" (A4 size), "s2100USA" (Letter size) or "s2100ISR" (A4 size, Israeli font for Israel) in the same folder and drop it onto the icon of the applicable model in FILEDG32. When the Ready LED of the machine lights up for an instant and goes off immediately after dropping it, the setting is completed. Then, set the serial number following the steps described in the next section.

■ Setting the serial number

<Procedures>

(1) Connect the PC and machine with the USB cable.

(2) Double-click the brmainte. EXE file (maintenance utility) which has been copied in the "hl2100" folder to start.
Select "Input Information" from Menu. Select the applicable model name.

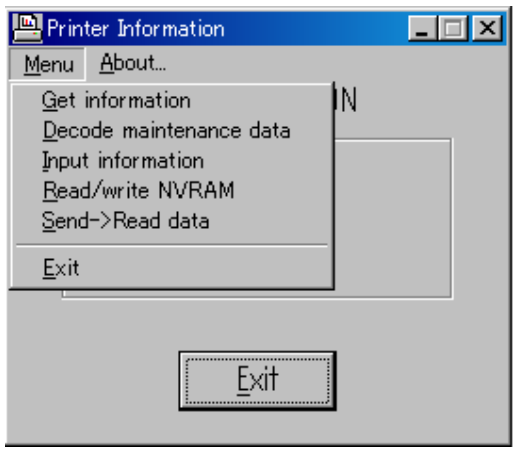

(3) Check the port (USB) which the machine is connected through and click "Serial No." in the lower box.

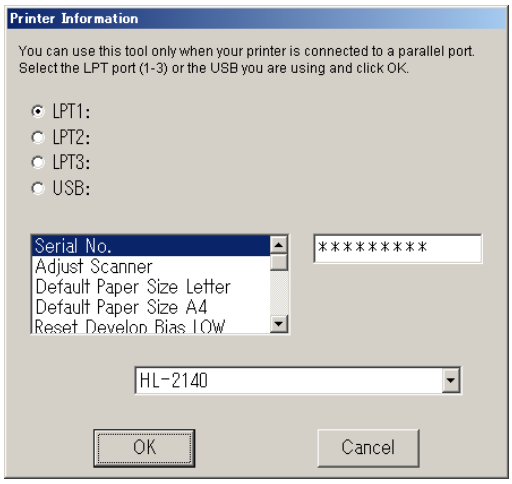

Enter the serial number (the last nine digits) of the machine into the box at the right hand side. The serial number is shown in the window, and check that it is correct.

CAUTION:

Refer to Appendix 1 to know how to read the serial number of the machine.

■ Inputting the adjusted value of the laser scanner

<Procedures>

(1) Double-click the brmainte. EXE file (maintenance utility) to start.
Select “Input Information” from Menu. Select the applicable model name.

(2) Select “Adjust Scanner” from Menu.

(3) Check the port (USB) that the machine is connected through.

(4) Enter the figures (the last four digits) shown on the label attached on the chassis at the right hand side of the main PCB into the box at the right hand side.

(5) Click the OK button.

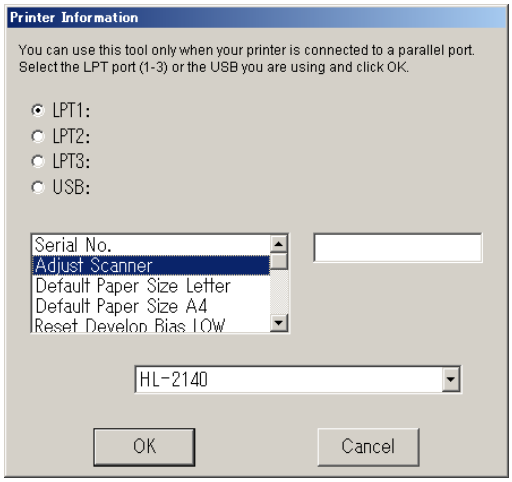

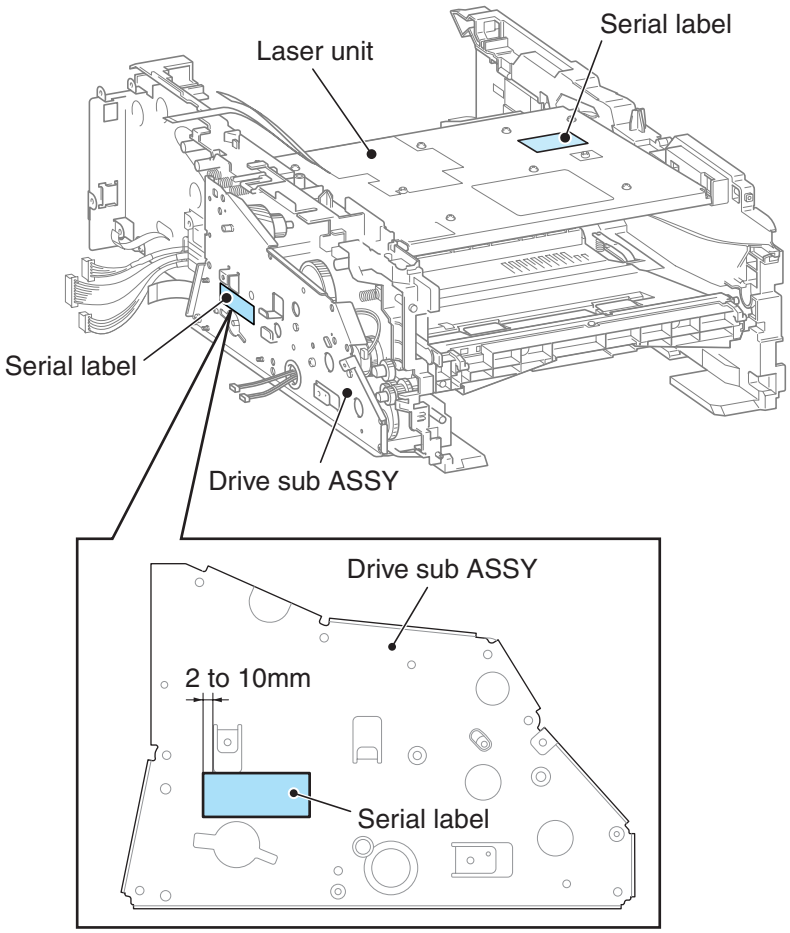

Confidential

■ Setting the toner cartridge type

The “Toner Life End” message is displayed according to the upper limit value of the developing roller rotation. The upper limit value is different between the starter toner cartridge, standard one and high-capacity one.
Therefore, it is necessary to set the conformable value to the toner cartridge installed in the machine following the steps below.

<Procedures>

(1) Select “Set Starter count” , “Set Standard count” or “Set High Capa count” from Menu according as the currently used toner cartridge.

Note :

- It is impossible to set more than two types of the toner cartridge.
- It selecting more than two types, the NG message is displayed.

(2) Check ON in the check box at the right hand side.
Click the OK button in the end. All of the settings are completed.
Turn the power supply of the machine off.

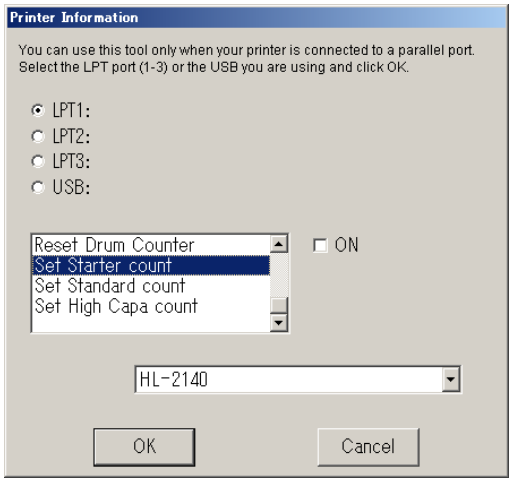

■ Backup to the Main PCB of the Wireless LAN PCB Information (HL-2170W only)

(1) Shift to the "PIT 3 Inspection Mode" of "1.3 Service Mode in Chapter 5".

(2) Close the front cover, and then leave for two minutes.

(3) After having passed more than two minutes, turn the power supply of the machine off.

2. IF YOU REPLACE THE WIRELESS LAN PCB

<What to do when replacing the wireless LAN PCB>

- Backup to the Main PCB of the Wireless LAN PCB Information (HL-2170W only)

<Which parts to use>

WIRELESS LAN PCB ASSY

<What you need to prepare>

(1) HL-2170W target machine

■ Backup to the Main PCB of the Wireless LAN PCB Information (HL-2170W only)

The main PCB stores a part of the information of EEPROM on the wireless LAN PCB. It is necessary to write the information of EEPROM on the wireless LAN PCB.

(1) Shift to the "PIT 3 Inspection Mode" of "1.3 Service Mode in Chapter 5".

(2) Close the front cover, and then leave for two minutes.

(3) After having passed more than two minutes, turn the power supply of the machine off.

3. IF YOU REPLACE THE LASER UNIT

■ Inputting the adjusted value of the laser scanner

(1) Double-click the brmainte.EXE file (maintenance utility).

(2) Select “Input Information” from Menu. Select the applicable model name.

(3) Check the port (USB) that the machine is connected through.

(4) Select “Adjust Scanner” from Menu. Enter the serial number (the last four digits) which is affixed to chassis of the right side of the Main PCB into the box on the right hand side.

(5) Click the OK button.

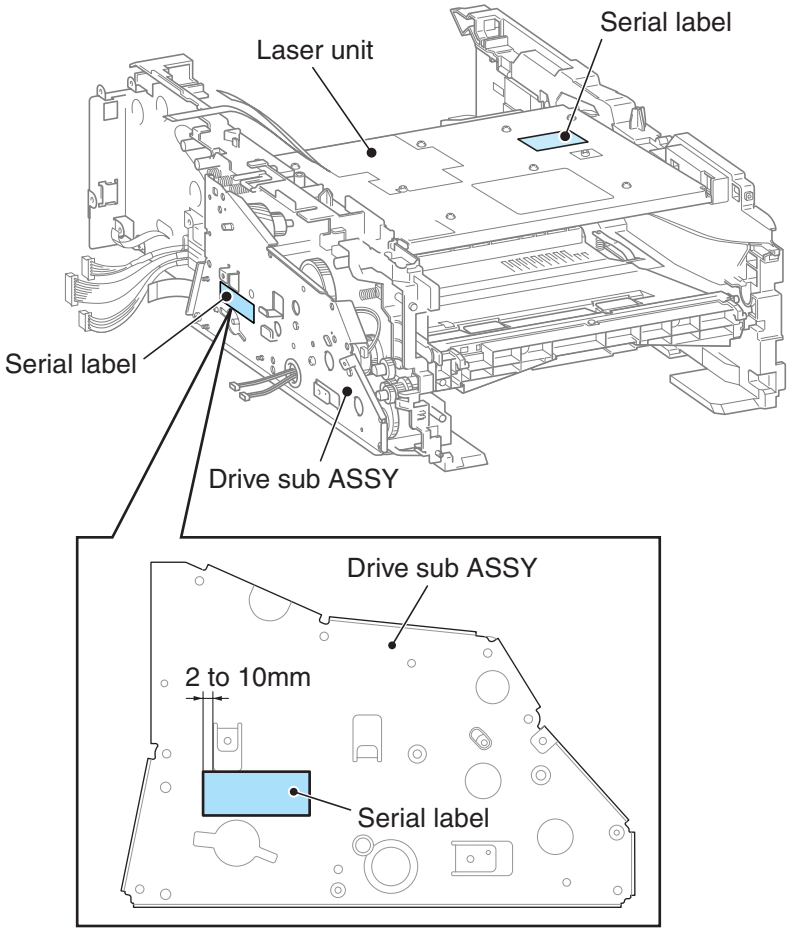

CHAPTER 5 SERVICE SUPPORT SOFTWARE

1. CONTROL PANEL

Various modes can be used if the power switch is set to ON while the [Go] button is held. There are two types of modes: User Mode and Service Mode. Three types of LED display are used to indicate that present setting.

- Toner/Drum/Error LEDs are lighted at the same time to show that transfer to thespecified mode is completed.
- Ready LED is lighted to show that the [Go] button is held when the mode or function is selected. Ready LED is out if the [Go] button is not held.
- All LEDs are lighted for 1 second at the same time to show that initialization or change of set values is completed.

1.1 List of service support functions

Front cover	Press the [Go] button or SW supporter when sifting the mode	Press the [Go] button or SW supporter when selecting the function	Function	Refer to:
Close	Once	Once	1) Test Sample Page	5-4
		Twice	2) Print Fonts	5-4
		Three times	3) USB 2.0 FULL Serial Number Return Value Setting	5-4
		Four times	4) Hex Dump Mode	5-4
		Five times	5) PCB ONLY Mode	5-4
		Six times	6) 1push Printing Recovery Mode	5-4
		Seven times	7) Network Reset 1 (APIPA: ON)	5-4
		Eight times	8) NV-RAM Factory Reset	5-4
		More than nine times	1) Test Sample Page	5-4
Open	Once	Once	9) Factory Inspection Mode	5-7
		Twice	10) Continuous Grid Pattern Print Mode	5-8
		Three times	11) Fixing Unit Test Print	5-8
		Four times	12) NV-RAM Value Dump Mode	5-8
		Five times	13) RAM Check	5-8
		Six times	14) QA Test print	5-8
		Seven times	15) Paper Size Setting (A4/ Letter)	5-9
	Twice	Once	16) Printing for Maintenance	5-9
		Twice	17) Printer Settings	5-11
		Three times	18) Sleep Mode Indication (OFF/Dimmed)	5-15
		Four times	19) Sleep Mode Setting (ON/ OFF)	5-15
		Five times	20) Developer Roller Counter Reset1 (For the starter toner cartridge)	5-15
		Six times	21) Developer Roller Counter Reset2 (For the standard toner cartridge)	5-15
		Seven times	22) Developer Roller Counter Reset3 (For the high-capacity toner cartridge)	5-15
	More than 2 seconds (long push)		PIT 3 Inspection Mode	5-6

1.2 User Mode

Basically, user mode should be accessed by service personnel only. However, if there is demand, you can disclose to end users.

<Procedure>

(1) Check that the front cover is closed.

(2) Turn ON the power switch while holding down the [Go] button.
Check that Toner/Drum/Error LEDs are lighted.

(3) Release the [Go] button and check that all LEDs are out.

(4) See accompanying table, press the [Go] button again depending on the necessary number of times.
Each mode starts 2 seconds.

Press the [Go] button	Mode
Once	**1) Test Sample Page**
Twice	**2) Print Fonts**
Three times	**3) USB 2.0 FULL Serial Number Return Value Setting**
Four times	**4) Hex Dump Mode**
Five times	**5) PCB ONLY Mode**
Six times	**6) 1push Printing Recovery Mode** * Check that all LEDs are lighted for one second.
Seven times	**7) Network Reset 1 (APIPA: ON)** * Check that all LEDs are lighted for one second.
Eight times	**8) NV-RAM Factory Reset** * Check that all LEDs are lighted for one second.
More than nine times	**1) Test Sample Page**

CAUTION:

- Each mode starts 2 seconds after pressing the [Go] button.
- If the [Go] button is pressed, the Ready LED is lighted. If the [Go] button is released, the LED is out.
- Pressing of the [Go] button 2 times (Print Fonts) and 7 times (Network Reset 1) is ineffective for HL-2140, and pressing of the [Go] button 2 times or 7 times is printed the (Test Sample page).

<Function>

Functions of each “User Mode”.

1) Test Sample Page

The machine prints a demo page. The machine returns to the ready status after printing.

2) Print Fonts

It is an effective function only for HL-2150N/2170W. The machine prints a list of the internal fonts. The machine returns to the ready status after printing.

3) USB 2.0 FULL Serial Number Return Value Setting

When the OS used the USB 2.0 FULL in Windows Vista®, do not recognize the serial number of USB device depending on a combination of PC and USB device. To avoid this, the return value of serial number can be switched to “0”. It is switched to a set value opposite to a current set value, whenever switching.

The setting change of return value is distinguished by the LED display when the [Go] button is separated. When the Toner LED lights for one second, show that the return value was set from normal value to “0”, and when the Drum LED lights for one second, show that the return value was set from “0” to normal value. The machine automatically goes back to ready state after the setting is completed.

4) Hex Dump Mode

This mode is printed as Hex data. without emulation processing the print data which received from the PC it is used for defectiveness analysis of the transmitted print data.

5) PCB ONLY Mode

Even when the engine error occurs and PCB exchange is required for recovery, the machine can be started, ignoring the engine error if this mode is used. NVRAM data can be obtained.

6) 1push Printing Recovery Mode

Demo page print is possible by pressing [Go] button after the power supply is turned on. The data for printing is cleared since the mode can be executed only once.
This mode enables to recover demo page printing. However, the design of printing is not demo page printing, but test printing.

7) Network Reset 1 (APIPA: ON)

It is an effective function only for HL-2150N/2170W. The network setting is reset to its factory setting. (APIPA is ON)

8) NV-RAM Factory Reset

The machine is restored to the factory setting and permanent fonts and macros are cleared.

1.3 Service Mode

The service mode is exclusively designed for the purpose of checks, settings and adjustments, and this function should be accessed by service personnel only. You can perform a print test and display the log information.

<Procedure>

(1) Check that the front cover is open.

(2) Turn ON the power switch while holding down the SW supporter. Check that Toner/Drum/Error LEDs are lighted.

(3) Release the SW supporter and check that all LEDs are off.

(4) See accompanying table, press the SW supporter once, twice or for 2 seconds. (long push), and then shift to each mode.

Press the SW supporter once

Press the SW supporter again depending on the necessary number of times after check that Toner/Drum/Error LEDs are lighted.

Press the SW supporter	Mode
Once	**9) Factory Inspection Mode**
Twice	**10) Continuous Grid Pattern Print Mode**
Three times	**11) Fixing Unit Test Print**
Four times	**12) NV-RAM Value Dump Mode**
Five times	**13) RAM Check**
Six times	**14) QA Test print**
Seven times	**15) Paper Size Setting (A4/Letter)**
More than Eight times	Go back to Normal State

Press the SW supporter twice

Press the SW supporter again depending on the necessary number of times after check that Toner/Drum/Error LEDs are lighted.

Press the SW supporter	Mode
Once	**16) Printing for Maintenance** * Start printing when close the front cover.
Twice	**17) Printer Settings** * Start printing when close the front cover.
Three times	**18) Sleep Mode Indication (OFF/Dimmed)**
Four times	**19) Sleep Mode Setting (ON/OFF)** * Check that all LEDs are lighted for one second.
Five times	**20) Developer Roller Counter Reset 1 (For the starter toner cartridge)** * Check that all LEDs are lighted for one second.
Six times	**21) Developer Roller Counter Reset 2 (For the standard toner cartridge)** * Check that all LEDs are lighted for one second.
Seven times	**22) Developer Roller Counter Reset 3 (For the high-capacity toner cartridge)** * Check that all LEDs are lighted for one second.
More than eight times	Go back to Normal State

Press the SW supporter more than 2 seconds (long push).

Check that Error LED is lighted.

PIT3 Inspection Mode * Factory use.

CAUTION:

- Each mode starts 2 seconds after pressing the SW supporter.
- If the SW supporter is pressed, the Ready LED is lighted.
  If the SW supporter is released, the Ready LED is out.

<Function>

Functions of each “Service Mode”.

9) Factory Inspection Mode

This mode checks the operation of each sensor, solenoid, fan, scanner motor and main motor to check the point with the malfunction, when repair the machine.

- The machine goes into the inspection mode by a special operation when the power is turned on.
- In the inspection mode, the Ready LED blinks once when the state of a sensor or a switch is changed (from ON to OFF, or from OFF to ON).
- The Toner LED is lit when the state of all switches and sensor is detected.

<Sensor Inspection Check Procedure>

- Check sensors.
  Manually activate the sensors and the actuators listed below, and verify that the Ready LED is lit. (The toner sensor can be activated by blocking the light sensor with your hand.)
  (When the state is changed continuously, the Ready LED keeps blinking.)
  Cover sensor, New toner sensor, Registration rear sensor, Paper eject sensor, Registration front sensor, Toner sensor and Tail edge sensor.
  When the verification of all the sensors is completed the Toner LED becomes lit.

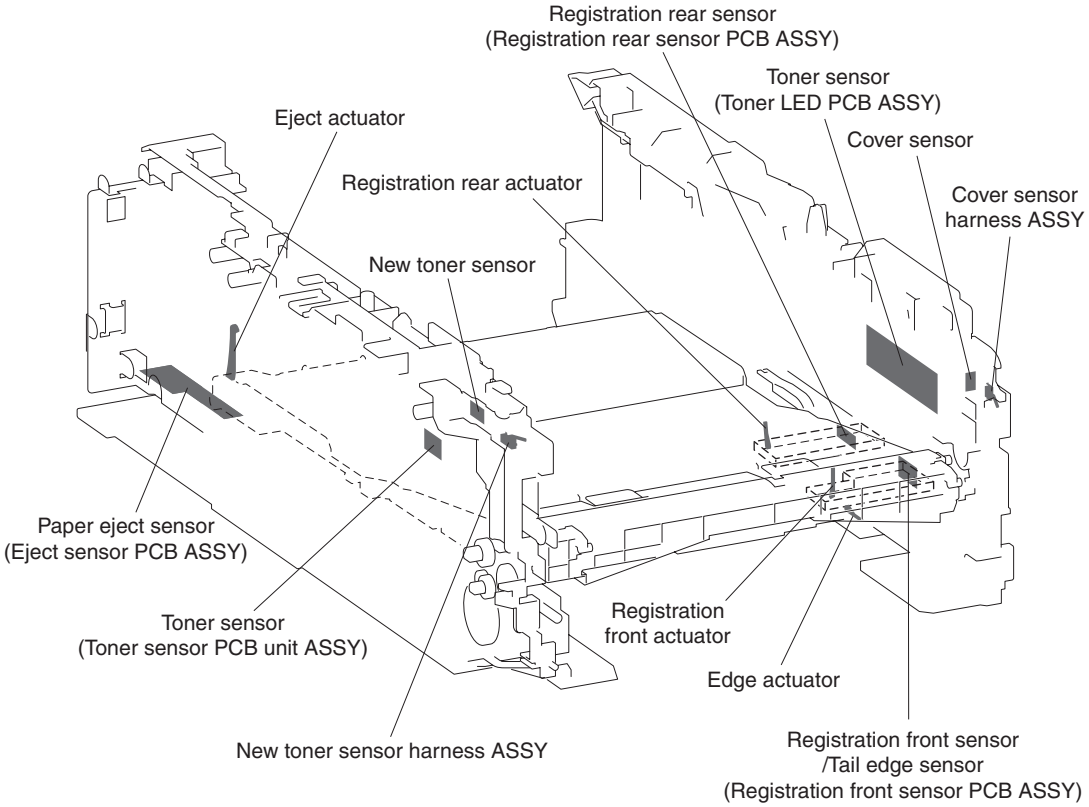

Fig. 5-1

- Check that the Toner LED goes out.
  Verify that the Ready LED is lit when pressing the [Go] button while the front cover is closed. (When you press the [Go] button while the front cover is closed, the Toner LED goes out.)
  It remains off while the [Go] button is being pressed.
- Check the fan operation.
  Close the front cover and verify the fan operation. (Verify full- speed and half-speed rotations, and halt.)
  The fan must repeat the following operations whenever the cover sensor is pressed.
  Full-speed rotation - Half-speed rotation - Halt - Full-speed rotation.
- Check the Solenoid.
  Verify that the T1 solenoid is turned on when the new toner sensor is turned on.
  Verify that the registration solenoid is turned on when the registration front sensor is turned on.
- Check the scanner motor and the main motor.
  Open the back cover from a closed state as pressing the SW supporter while the front cover is open, and then close again. Release the SW supporter and close the front cover. The scanner motor starts rotating, and in two seconds the main motor starts rotating. When you open the front cover, the scanner motor and the main motor stop rotating.
- When the verification is completed, turn the power off.

10) Continuous Grid Pattern Print Mode

This mode is to continuously print a grid pattern with a serial number on it. The number of grid pattern prints is displayed at the same time. The machine does not go back to the ready state unless the power is turned off and on.

11) Fixing Unit Test Print

This is to print the following three patterns to check the fixing unit.

- Grid pattern with a serial number on it
- Gray pattern
- Black pattern

When this operation is completed, the machine automatically goes back to the waiting Service mode state.

12) NV-RAM Value Dump Mode

This is to collectively print the present state of the NV-RAM of all machines. When this operation is completed, the machine automatically goes back to the waiting Service mode state.

13) RAM Check

This is to execute a stricter RAM check than a standard one. If the result turns out unaccepted, it considers an error, and all the LEDs blink. If it turns out accepted, the Ready LED and Error LED keeps blinking in alternate shifts. The machine does not go back to the ready state unless the power is turned off and on.

14) QA Test print

This is to print four patterns to check the machine quality. When this operation is completed, the machine automatically goes back to the waiting Service mode state.

15) Paper Size Setting (A4/Letter)

You can select the paper size setting (A4/Letter) of the machine body. Whenever you switch this mode, the setting is changed over from the present one to other.
You can verify the setting change by LEDs when releasing the SW supporter.
When the Toner and Drum LEDs light for 1 second, the paper size is set to Letter. When launched without LED lighting, the paper size is set to A4.

16) Printing for Maintenance

This is to print a list of all maintenance information including printer coverage information. (There is not the development of each national language, and only English.)

```
<<PRINT MAINTENANCE>>

Brother HL-2170W series
Serial Number: F7J000272
CONT. ROM VERSION: 0.23

<Device Status>
 Page Count: 286
 Drum Count: 286
 Average Coverage: 2.97%

<*Drum Information>
 Estimated Pages Remaining: 11714
 (% of Life Remaining: 97.4%)

<Total Pages Printed>
 Previously Used Toner: 0
 Current Toner: 286
 **(% of Life Remaining: 81%)

<Total Pages Printed>
 Manual Feed: 1
 Tray 1: 285

<Total Pages Printed>
 A4/Letter: 286
 Legal/A4Long/Folio: 0
 B5/Executive: 0
 Envelope: 0
 A5: 0
 Others: 0

<Total Pages Printed>
 Plain/Thin/Recycled: 286
 Transparencies: 0
 Thick/Thicker/Bond: 0
 Envelopes/Env. Thick/Env. Thin: 0

<Total Paper Jams: 0>
 JAM Tray 1: 0
 JAM Inside: 0
 JAM Rear: 0

<Error History (last 10 errors)>
 1:
 2:
 3:
 4:
 5:
 6:
 7:
 8:
 9:
 10:

<Replace Count>
 Drum: 0
 Toner: 0

<Developing Bias: 403V>

[00] [00] [00]   (00)  (L0 000 00USA)  [901]  [JP]  [0FBD]


*Based on A4/Letter printing.
```

Fig. 5-2

Display terms is as follows.

Series Name	Model name of machine
Serial Number	Serial number of machine
CONT. ROM VERSION	Rom version of machine
Device Status	Page Count, Drum Count, Average Coverage The maximum count for each item is 1 million times.
Drum Information	Estimated Pages Remaining, % of Life Remaining.
Total Pages Printed*	Previously Used Toner, Current Toner. The maximum value for each count is 65535. % of Toner Life Remaining.
Total Pages Printed	Total Pages Printed (Tray 1, Manual Feed). The maximum count for each item is 1 million times. The information above is not cleared when replacing the PF kit.
Total Pages Printed	The number of A4/Letter, A4Long/Legal/Folio, B5/Executive, Envelope, A5 and other paper types used. The maximum count for each item is 1 million times.
Total Pages Printed	The number of Plain/Thin/Recycled, Transparencies, Thick/Thicker/Band and Envelopes/Env. Thick/Env. Thin types used. The maximum count for each item is 1 million times.
Total Paper Jams	The number of paper jam occurrence in each of the Tray, Inside and Rear. The paper jam occurs when the machine is turned ON is not counted. The maximum count for each item is 255 times.
Error History	The error history including the latest 10 errors and the number of pages when these errors occur are indicated. However, the Cover Open error, No Paper and Manual Feed is excluded.
Replace Count	The number of replacement of DRUM and TONER The maximum count for each item is 65535 times.
Developing Bias*	Developing Bias of now

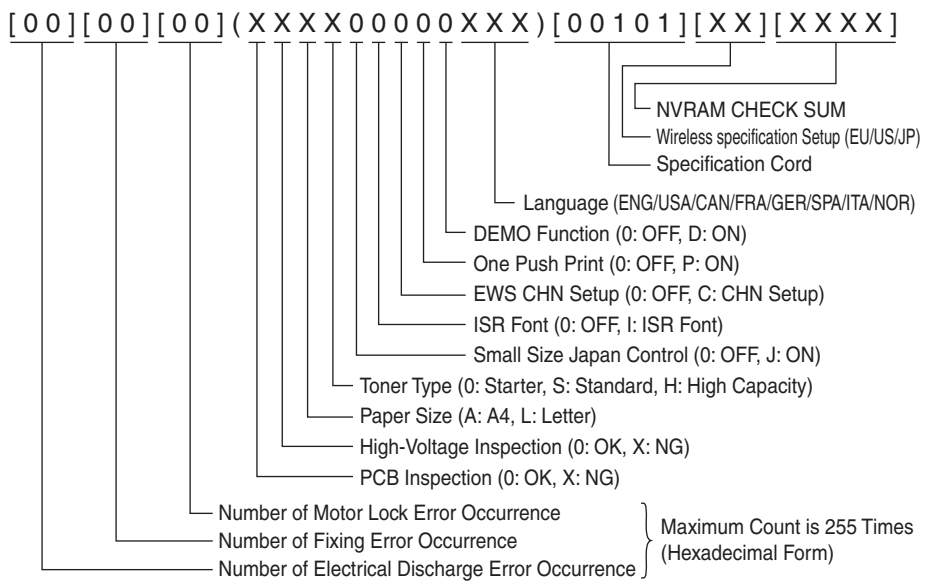

CAUTION:

- * is displayed only in maintenance information.
- Some margin of error must be taken into consideration because coverage for the printable area of A4-size paper is calculated using video signals.

17) Printer Settings

If you want to know the drum unit life or the number of printed pages, you should print out the Printer Settings. The “Printer Settings” is configured with one page for HL-2140, three pages for HL-2150N and four pages for HL-2170W (The wired LAN and wireless LAN is set to ON). All pages have following terms in common, Title, Model name, Serial number. The setting indication is the same as the LCD setting information, supporting the following 18 languages. (ENG/ FRE/ GER/ DUT/ ITA/ SPA/ NOR/ SWE/ DAN/ POR/ FIN/ CZE/ POL/ HUN/ RUS/ BUL/ ROM/ SLV)

Memo :

- It is also allowed you to print the “Printer Settings” by pressing the [Go] button three times continuously when the front cover is closed and when the machine is in the ready mode.
- The descriptions printed in Printer Settings vary depending on the countries.

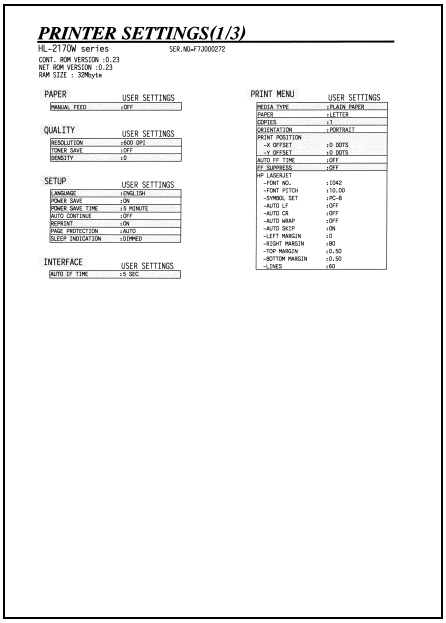

PRINTER SETTINGS(1/3)

HL-2170W series SER.NO=F7J000272

CONT. ROM VERSION :0.23
NET ROM VERSION :0.23
RAM SIZE : 32Mbyte

PAPER	USER SETTINGS
MANUAL FEED	:OFF

QUALITY	USER SETTINGS
RESOLUTION	:600 DPI
TONER SAVE	:OFF
DENSITY	:0

SETUP	USER SETTINGS
LANGUAGE	:ENGLISH
POWER SAVE	:ON
POWER SAVE TIME	:5 MINUTE
AUTO CONTINUE	:OFF
REPRINT	:ON
PAGE PROTECTION	:AUTO
SLEEP INDICATION	:DIMMED

INTERFACE	USER SETTINGS
AUTO IF TIME	:5 SEC

PRINT MENU	USER SETTINGS
MEDIA TYPE	:PLAIN PAPER
PAPER	:LETTER
COPIES	:1
ORIENTATION	:PORTRAIT
PRINT POSITION	
-X OFFSET	:0 DOTS
-Y OFFSET	:0 DOTS
AUTO FF TIME	:OFF
FF SUPPRESS	:OFF
HP LASERJET	
-FONT NO.	:1042
-FONT PITCH	:10.00
-SYMBOL SET	:PC-8
-AUTO LF	:OFF
-AUTO CR	:OFF
-AUTO WRAP	:OFF
-AUTO SKIP	:ON
-LEFT MARGIN	:0
-RIGHT MARGIN	:80
-TOP MARGIN	:0.50
-BOTTOM MARGIN	:0.50
-LINES	:60

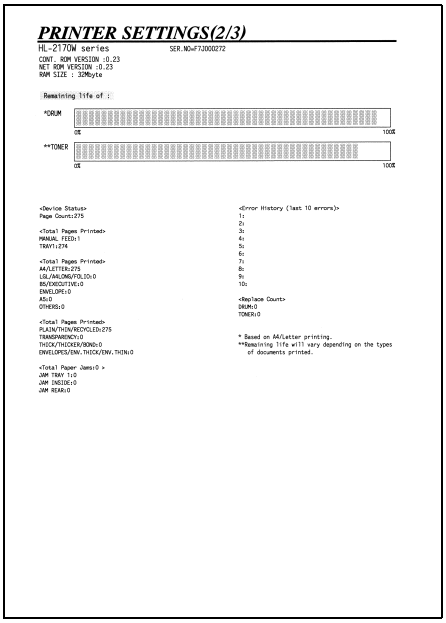

PRINTER SETTINGS(2/3)

HL-2170W series SER.NO=F7J000272

CONT. ROM VERSION :0.23
NET ROM VERSION :0.23
RAM SIZE : 32Mbyte

Remaining life of :

*DRUM 0% 100%

**TONER 0% 100%

<Device Status>
Page Count:275

<Total Pages Printed>
MANUAL FEED:1
TRAY1:274

<Total Pages Printed>
A4/LETTER:275
LGL/A4LONG/FOLIO:0
B6/EXECUTIVE:0
ENVELOPE:0
A5:0
OTHERS:0

<Total Pages Printed>
PLAIN/THIN/RECYCLED:275
TRANSPARENCY:0
THICK/THICKER/BOND:0
ENVELOPES/ENV.THICK/ENV.THIN:0

<Total Paper Jams:0 >
JAM TRAY 1:0
JAM INSIDE:0
JAM REAR:0

<Error History (last 10 errors)>
1:
2:
3:
4:
5:
6:
7:
8:
9:
10:

<Replace Count>
DRUM:0
TONER:0

* Based on A4/Letter printing.
**Remaining life will vary depending on the types of documents printed.

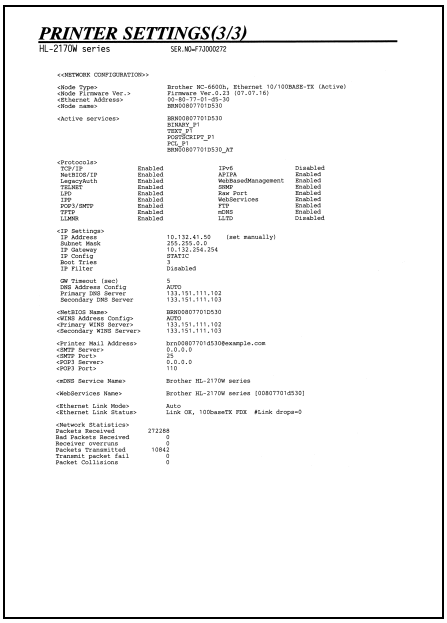

PRINTER SETTINGS(3/3)

HL-2170W series SER.NO=F7J000272

<<NETWORK CONFIGURATION>>

<Node Type>	Brother NC-6600h, Ethernet 10/100BASE-TX (Active)
<Node Firmware Ver.>	Firmware Ver.0.23 (07.07.16)
<Ethernet Address>	00-80-77-01-d5-30
<Node name>	BRN00807701D530
<Active services>	BRN00807701D530 BINARY_P1 TEXT_P1 POSTSCRIPT_P1 PCL_P1 BRN00807701D530_AT

<Protocols>			
TCP/IP	Enabled	IPv6	Disabled
NetBIOS/IP	Enabled	APIPA	Enabled
LegacyAuth	Enabled	WebBasedManagement	Enabled
TELNET	Enabled	SNMP	Enabled
LPD	Enabled	Raw Port	Enabled
IPP	Enabled	WebServices	Enabled
POP3/SMTP	Enabled	FTP	Enabled
TFTP	Enabled	mDNS	Enabled
LLMNR	Enabled	LLTD	Disabled

<IP Settings>	
IP Address	10.132.41.50 [set manually]
Subnet Mask	255.255.0.0
IP Gateway	10.132.254.254
IP Config	STATIC
Boot Tries	3
IP Filter	Disabled
GW Timeout (sec)	5
DNS Address Config	AUTO
Primary DNS Server	133.151.111.102
Secondary DNS Server	133.151.111.103
<NetBIOS Name>	BRN008077D1D530
<WINS Address Config>	AUTO
<Primary WINS Server>	133.151.111.102
<Secondary WINS Server>	133.151.111.103
<Printer Mail Address>	brn008077d1d530@example.com
<SMTP Server>	0.0.0.0
<SMTP Port>	25
<POP3 Server>	0.0.0.0
<POP3 Port>	110
<mDNS Service Name>	Brother HL-2170W series
<WebServices Name>	Brother HL-2170W series [008077d1d530]
<Ethernet Link Mode>	Auto
<Ethernet Link Status>	Link OK, 100baseTX FDX #Link drops=0

<Network Statistics>	
Packets Received	272288
Bad Packets Received	0
Receiver overruns	0
Packets Transmitted	10842
Transmit packet fail	0
Packet Collisions	0

Fig. 5-3

■ Page 1

This page includes various setting information of the machine.

- Printer information
  In the following order
  - Controller Version (CONT.ROM VERSION)
  - Net work Version (NET ROM VERSION)
    But, HL-2140 is not indicated
  - RAM SIZE (Mbyte)
- Printer settings information
  Each term is indicated when if fulfills the condition, and HL-2140 is indicated the maintenance information to the Page 1.

■ Page 2

This page includes the printer information and the maintenance information in the following order.

- Maintenance information

  (1) Consumable information

  The printable pages remained for the consumable part is indicated. Also, the percentage of life remained over the total printable pages is indicated in numerical value and bar graph.

  Sample indication (DRUM) is as follows.

  From the top left, the consumable part name is indicated. The right column is a band graph separated into 50 scale marks.

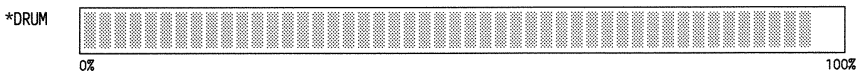

Fig. 5-4

The consumable parts indicated are as follows.

- Drum Unit
- TONER

CAUTION:

- The drum unit life is shown by the band graph at the center of Printer Settings.

Drum Unit Life

How to Read the Drum Unit Life

- It initially indicates 100% and gradually decreases.
- It indicates 0% when the Drum LED is blinking.
- It stays at 0% even if further printing is done.

How to calculate the drum unit life

The drum unit life is based on the “drum counter” or the “number of drum rotations”.

The drum counter is based on the total printed pages on the drum unit. This total printed pages should be reset every time you replace the drum unit with a new one. (Refer to "2.1 User Maintenance Mode" in Chapter 5.) Basically this amount is equal to the assured printable pages of the drum unit.

If a drum discharge is detected, toner life ends.

If under the situation with a little print number of sheets per one job, the “page counter based on the number of drum rotation” exceeds the “drum counter” based on the total printed page.

Refer to the calculation of the drum unit life based on the number of drum rotation below;

How to calculate the page counter

The number of drum rotations for the first page printed is about 15. The number of drum rotations per one page for the second or later page printed (continuous printing) is 4.3. Using these figures, the page counter is calculated as follows:

Page counter based on the number of drum rotations = (Number of drum rotations for the first page printed + (Number of drum rotations per one page for the second or later page printed x (Number of pages in continuous printing - 1)) / 15
(* The number of drum rotations per one page continuous printing.)

Example: Starts to print when the machine is in the Ready state.

Continuous printing	Page counter based on the number of drum rotations (Pages)
1 page/job	(15 + (4.3 x (1 - 1))) / 15 = 1
2 pages/job	(15 + (4.3 x (2 - 1))) / 15 = 1.29
18 pages/job	(15 + (4.3 x (18 - 1))) / 15 = 5.87

If you leave the machine without printing for a long time, the number of drum rotations is increasing. If you print one page per one job every time after leaving the machine without printing for a long time, the drum unit life is shorter than usual.

(2) Counter information, history information

The counter and history information related to the following term are included. When it reaches the maximum count, each term is no longer counted.

Page Count	The total number of printed pages . The maximum count is 1 million pages.
Total Pages Printed	The number of times that each of the Tray1 and Manual Feed is used. The maximum count for each item is 1 million times. The information above is not cleared when replacing the PF kit.
Total Pages Printed	The number of A4/Letter, A4Long/Legal/Folio, B5/Executive, Envelope, and other paper types used. The maximum count for each item is 1 million times.
Total Pages Printed	The number of Plain/Thin/Recycled, Transparencies, Thick/Thicker/Band and Envelopes/Env. Thick/Env. Thin types used. The maximum count for each item is 1 million times.
Total Paper Jams	The number of paper jam occurrence in each of the Tray, Inside and Rear. The paper jam occurs when the machine is turned ON is not counted. The maximum count for each item is 255 times.
Error History	The error history including the latest 10 errors and the number of pages when these errors occur are indicated. The errors such as Cover Open, No Paper and Manual Feed is not included. When a paper is jammed by turning on the power or leaving covers open (JAM TRAY1, JAM INSIDE, or JAM REAR), a period will be printed at the beginning of error numbers.
Replace Count	The number of replacement of each of Drum and Toner Unit. The maximum count for each item is 65535 times.

■ **Page 3, 4**

These pages include various network settings information of the machine.

HL-2150N/2170W	Page 3: Wired Network Information
HL-2170W	LAN: Wired Enable setting = ON, LAN: WLAN Enable setting = ON Page 3: Wired Network Information Page 4: Wireless Network Information
	LAN: Wired Enable setting = ON, LAN: WLAN Enable setting = OFF Page 3: Wired Network Information Page 4: Not Available
	LAN: Wired Enable setting = OFF, LAN: WLAN Enable setting = ON Page 3: Wireless Network Information Page 4: Not Available
	LAN: Wired Enable setting = OFF, LAN: WLAN Enable setting = OFF Page 3&4: Not Available

18) Sleep Mode Indication (OFF/Dimmed)

This is to select whether the Ready LED is turned off completely or lit in blue with low light intensity during the Sleep mode. Whenever you switch this mode, the setting is changed over from the present one to the other. When you take your finger off from the SW supporter, the Ready LED is lit in 100% light intensity or low light intensity according to the setting so that you can verify the present setting.

19) Sleep Mode Setting (ON/OFF)

This is to allow you to turn on and off the sleep mode of the machine. The default setting is ON. The machine automatically goes back to the waiting Service mode state after the operation is completed.

20) Developer Roller Counter Reset 1 (For the starter toner cartridge)

21) Developer Roller Counter Reset 2 (For the standard toner cartridge)

22) Developer Roller Counter Reset 3 (For the high-capacity toner cartridge)

Since print density is likely to become darker as toner is getting older, the developing bias is lowered by degrees according to the number of prints so that an almost fixed density can be maintained from the start of the use of brand-new toner to the end of it.

The value of the developing bias is printed on the maintenance sheet. The developing bias is a parameter which depends on the developing assembly, so it needs to be reset when the developing assembly is replaced. At that time, the developing roller counter reading is also reset. This mode is to enable to execute these operations (equivalent to those done when the developing assembly is replaced) manually from the service mode.

2. OTHER SERVICE FUNCTIONS

2.1 User Maintenance Mode

This section describes what the end user should do when replacing the consumable parts.

■ Resetting the drum counter

The printed image may deteriorate when using the drum unit to a certain degree. The machine detects how much the drum unit is used with the drum counter and the Drum LED blinks when the drum unit life is nearly at the end of its life to indicate to the end user that the drum unit life reaches the end of its life soon, in order to prevent the printed image defects due to drum unit deterioration.

The machine does not provide the function which resets the drum counter automatically when the drum unit is replaced with a new one. If replacing the drum unit with a new one without resetting the drum counter, the counted value of the old drum unit is used continuously so that the Drum LED is not off.

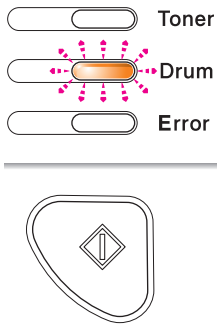

Fig. 5-5

When replacing the drum unit with a new one, it is required to reset the drum counter following the steps below:

<Procedure>

(1) Open the front cover while the power supply of the machine is ON, after check the LED of the above-mentioned, and verify that the Error LED is lit.

(2) Keep the SW supporter pressed down until all LEDs on the control panel light up. (approx. four seconds)

(3) Release the SW supporter when all LEDs light up and take the old drum unit out of the machine.

(4) Verify that Error LED is lit, and install a new drum unit into the machine.

(5) Close the front cover.

Note:

If the drum counter is reset on condition that the machine has printed out 100 pages or more since the previous reset, the replace counter for the drum is updated.

■ Initializing the developing bias

When replacing the toner cartridge with a new one, the new toner sensor detects that the toner cartridge is replaced, and the developing bias is initialized automatically. Therefore, the end user is not necessary to initialize the developing bias.
If replacing the toner cartridge which contains enough toner with a used one, the new toner sensor cannot detect that the toner cartridge is replaced so that the developing bias is not initialized. In this case, the print density may be lighter than usual.

In such a case, initialize the developing bias forcedly following the steps below:

<Procedure>

- Standard toner cartridge

(1) Open the front cover.
(2) Take the drum unit out of the machine.
(3) Press the SW supporter.
(4) Install the drum unit into the machine.
(5) Press the SW supporter.
(6) Close the front cover.

- High-capacity toner cartridge

(1) Open the front cover.
(2) Take the drum unit out of the machine.
(3) Press the SW supporter.
(4) Install the drum unit into the machine.
(5) Press the SW supporter twice.
(6) Close the front cover.

■ Wireless LAN setting (HL-2170W only)

When the machine is in a standard state, you can switched to the Effective/Invalidity of the wireless LAN setting by pressing the [Go] button for 10 seconds. At the same time, switched to the Effective/Invalidity of the wired LAN setting. It is switched to a set value opposite to a current set value, whenever switching. and then the wireless network information (Net Config) printing is implement.
Check that which of wireless LAN or wired LAN became effective. Judge by the Active or Inactive from “Node Type” which is mentioned in “Net Config” of “Printer Settings”.

■ Main PCB Circuit Diagram (1/4)

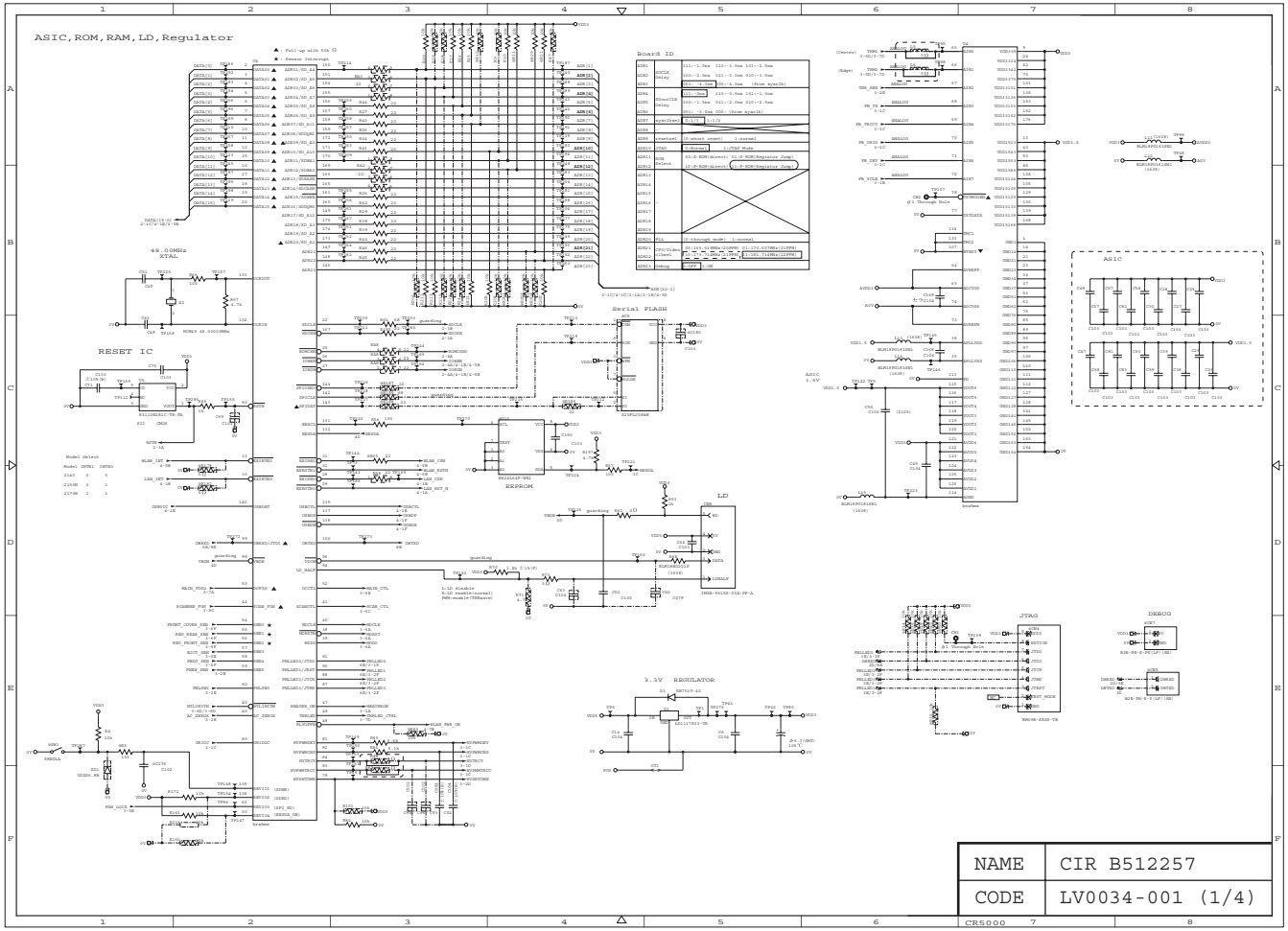

Confidential

■ Main PCB Circuit Diagram (2/4)

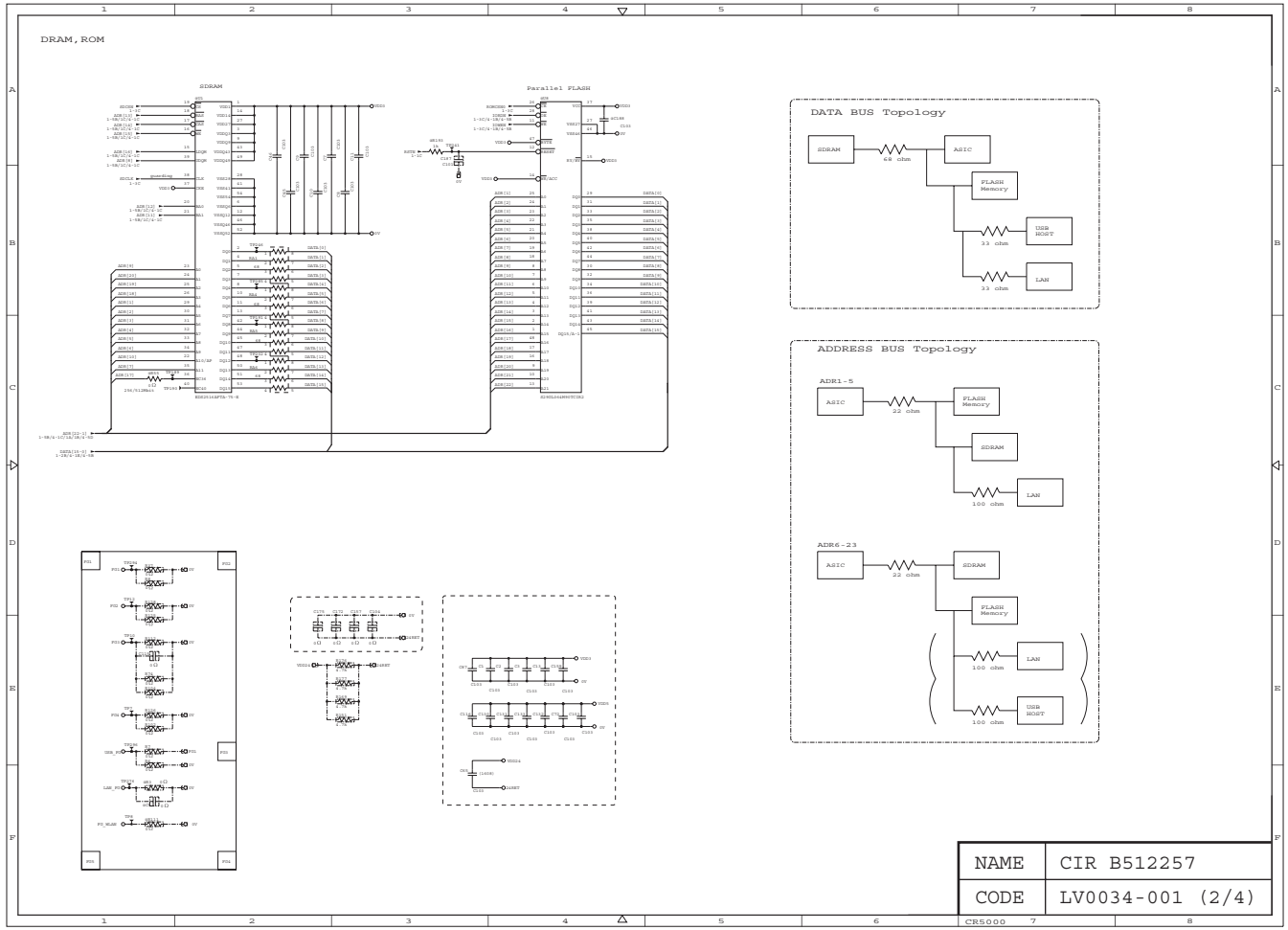

Confidential

■ Main PCB Circuit Diagram (3/4)

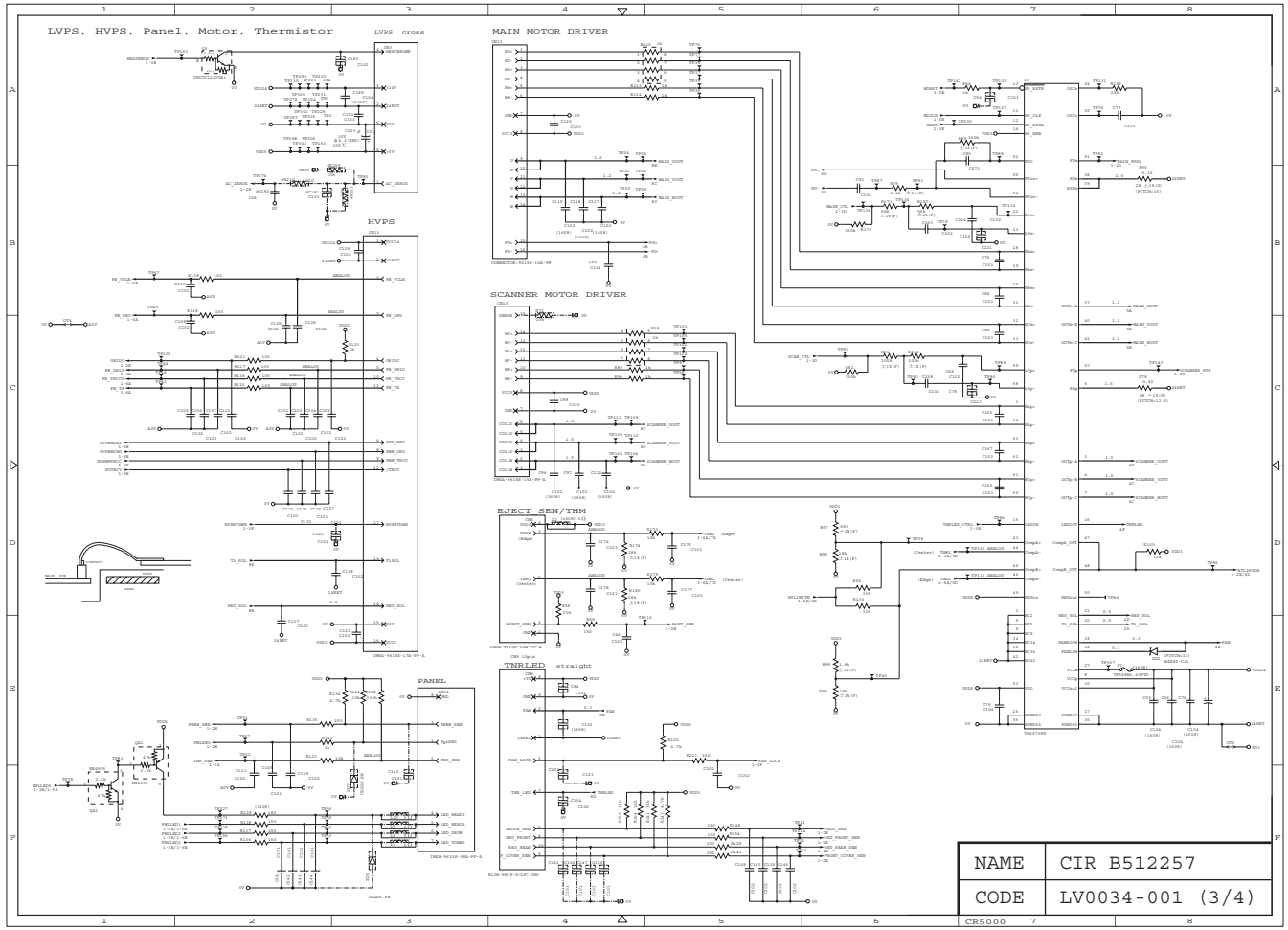

Confidential

■ Main PCB Circuit Diagram (4/4)

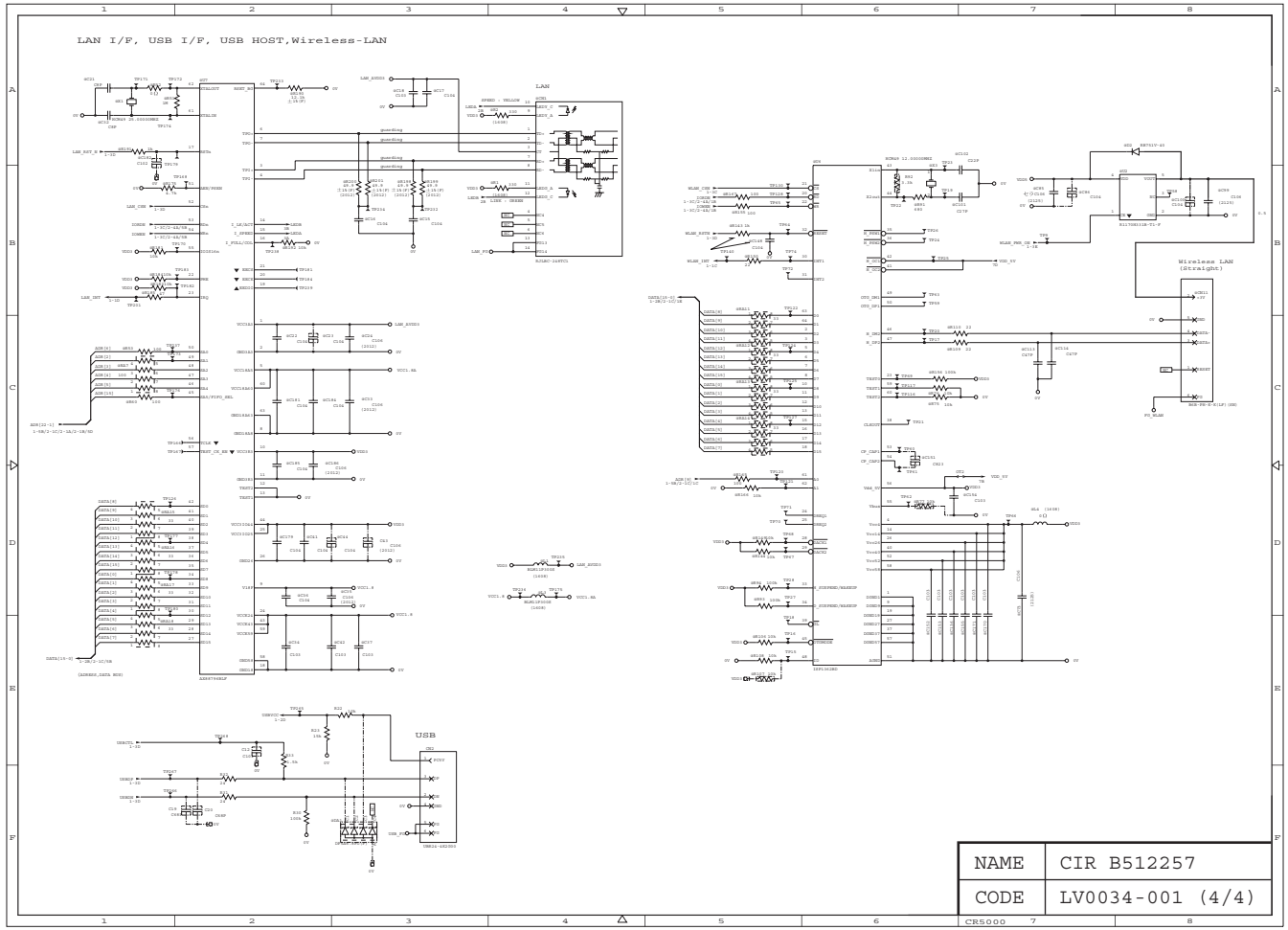

Confidential

■ High-voltage Power Supply PCB Circuit Diagram

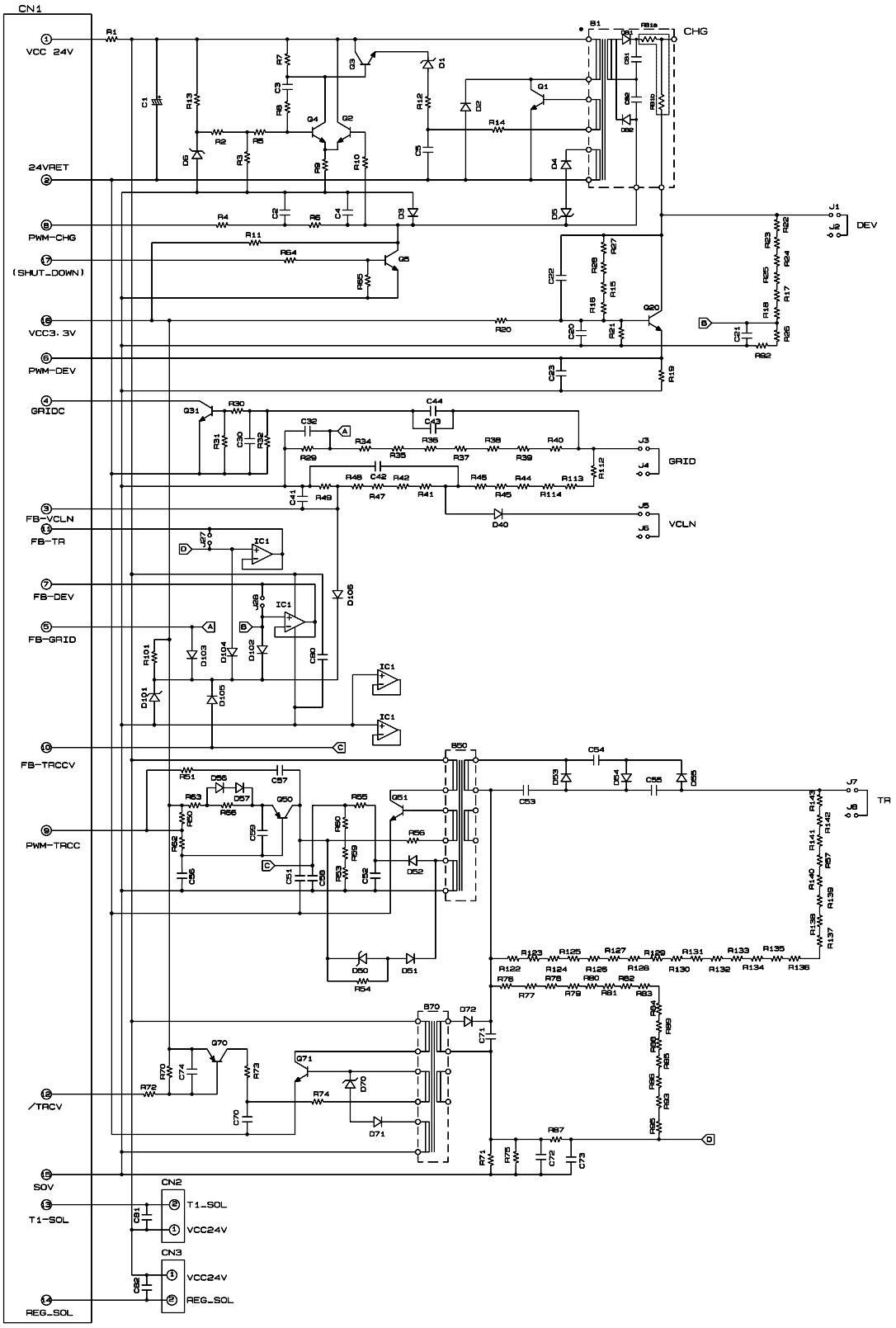

■ Low-voltage Power Supply PCB Circuit Diagram (100V)

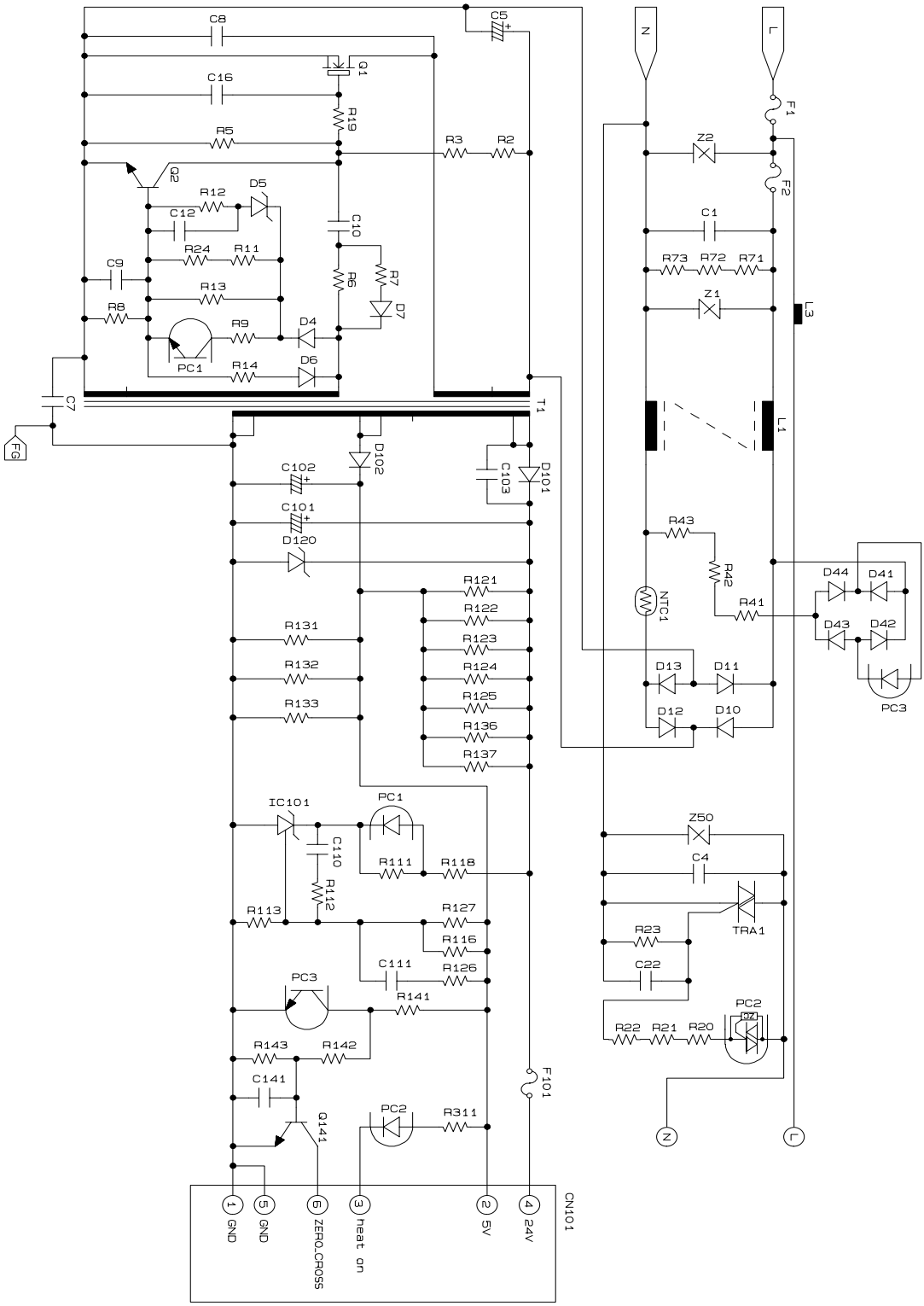

Confidential

■ Low-voltage Power Supply PCB Circuit Diagram (200V)

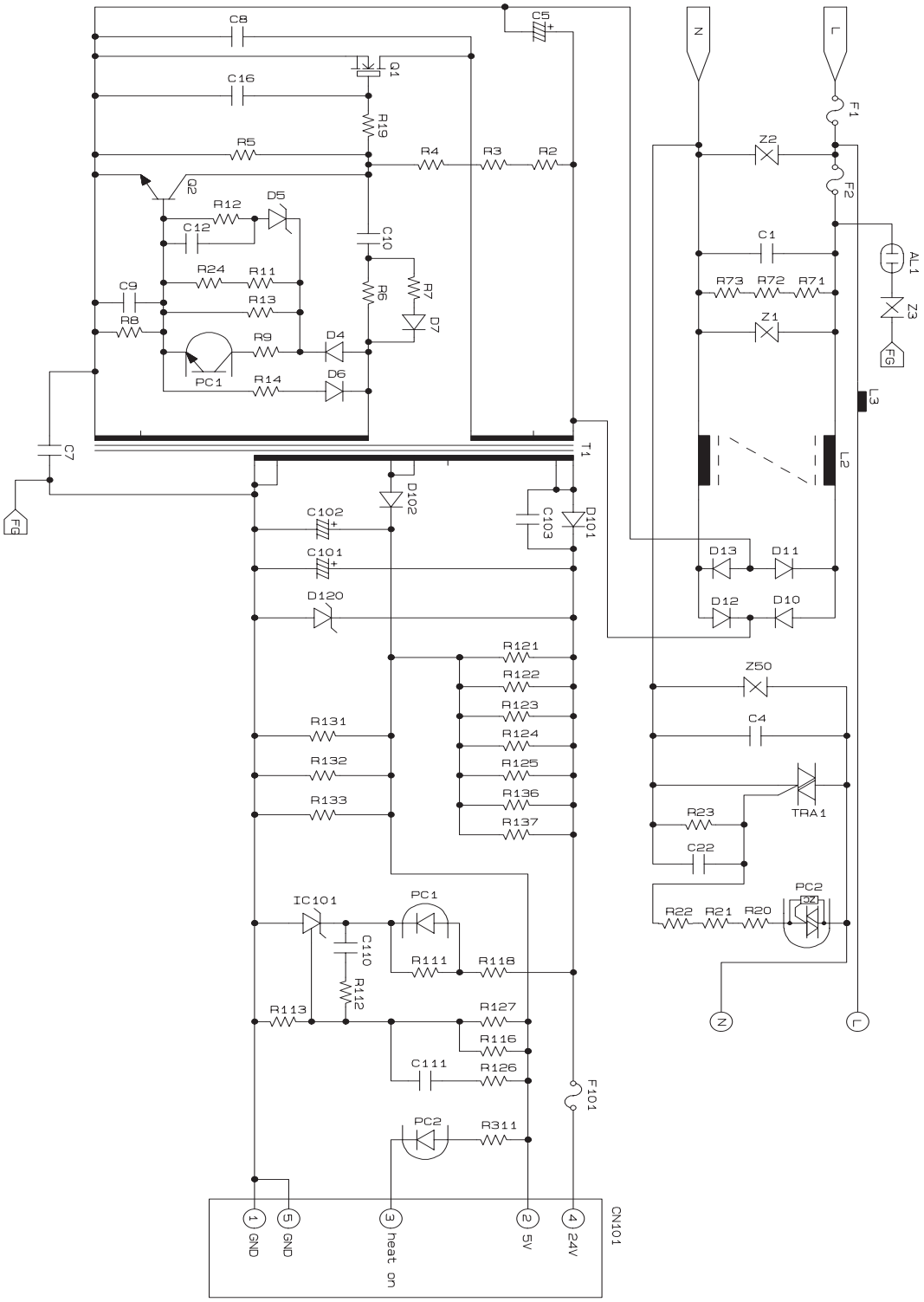

Confidential

■ Wiring Diagram

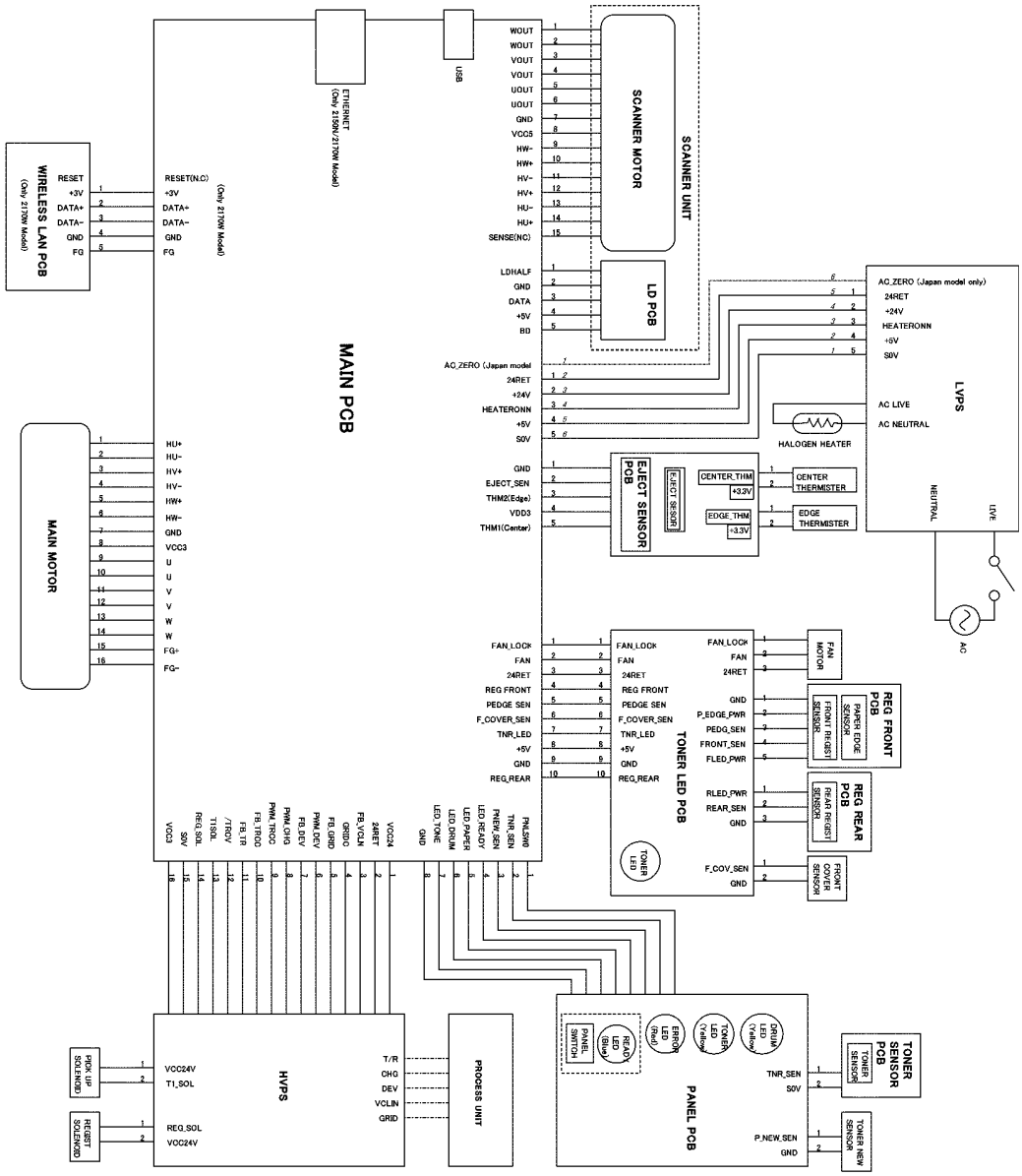

APPENDIX 1 SERIAL NUMBERING SYSTEM

Each machine has a serial number label for the machine itself and property labels for some other parts. Refer to the information below for the meaning of the serial number and property codes and the location of each label.

■ Serial number labels for the machine itself

<How to Read>

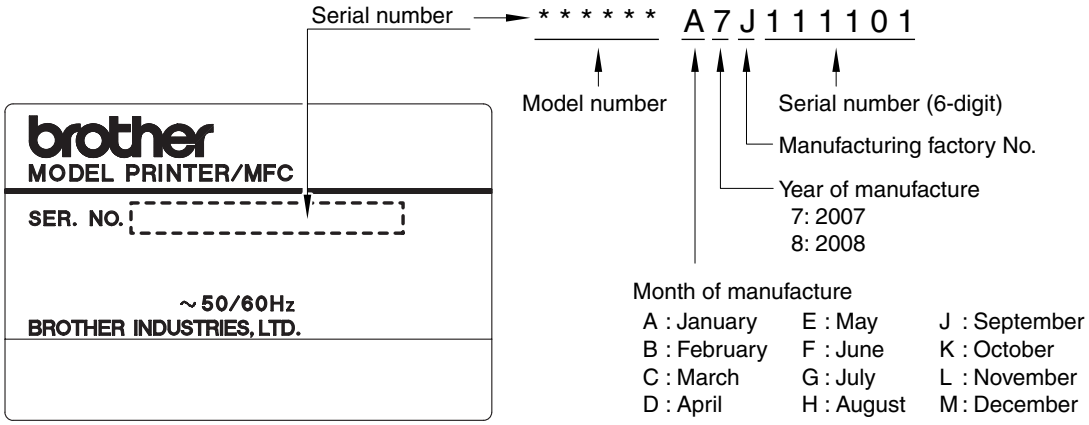

Fig. App. 1-1

<Location>

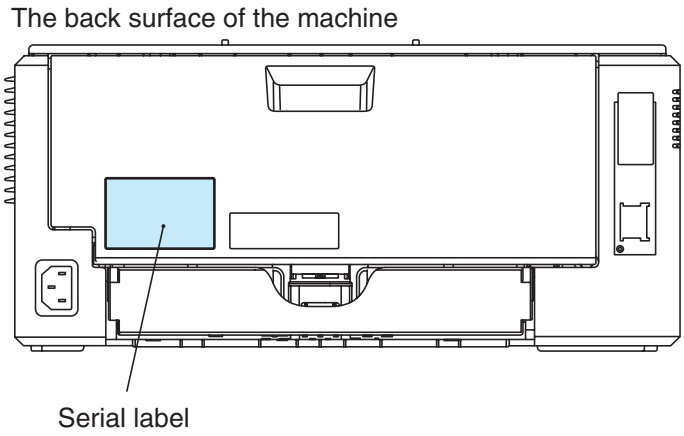

Fig. App. 1-2

Confidential

■ Laser unit serial label

<How to Read>

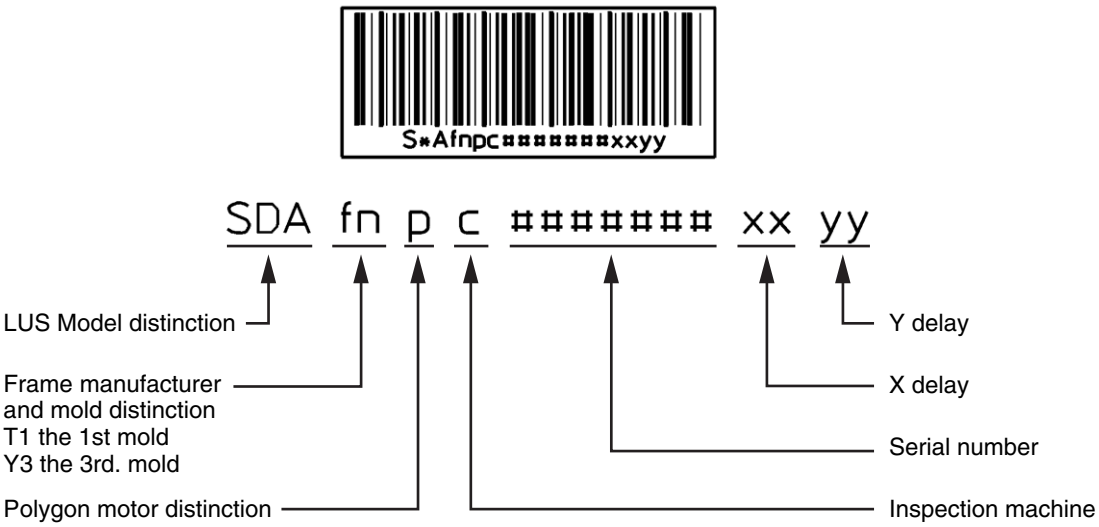

Fig. App. 1-3

<Location>

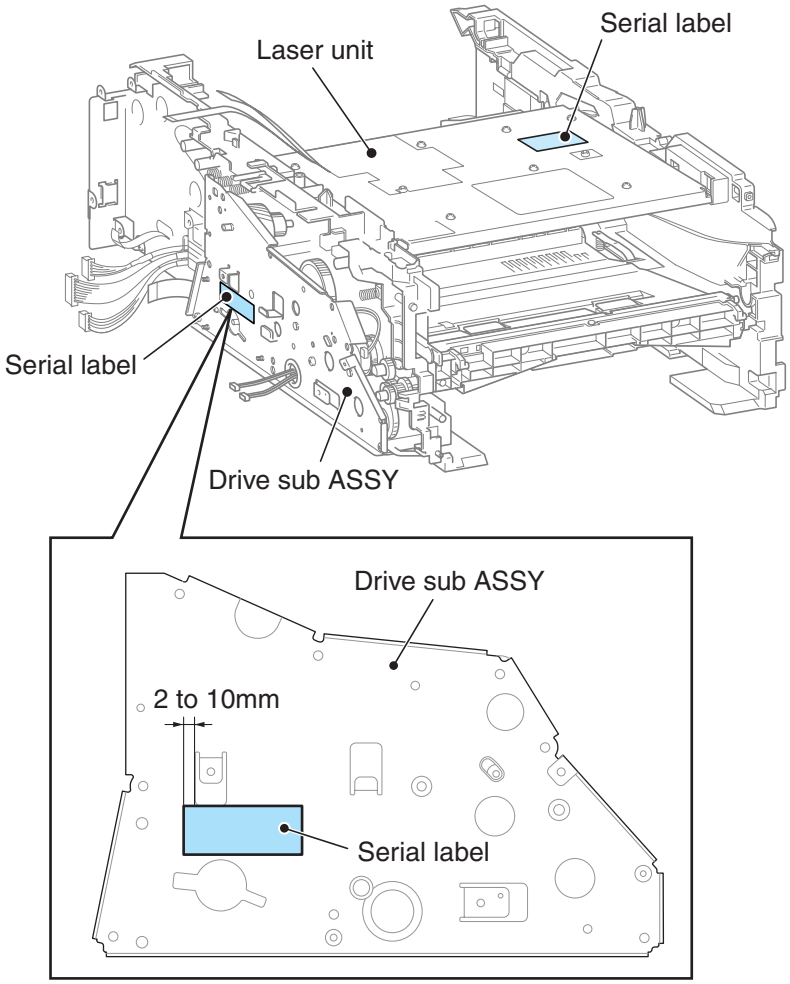

Fig. App. 1-4

Confidential

■ Toner cartridge and Drum unit serial label (in common)

<How to read>

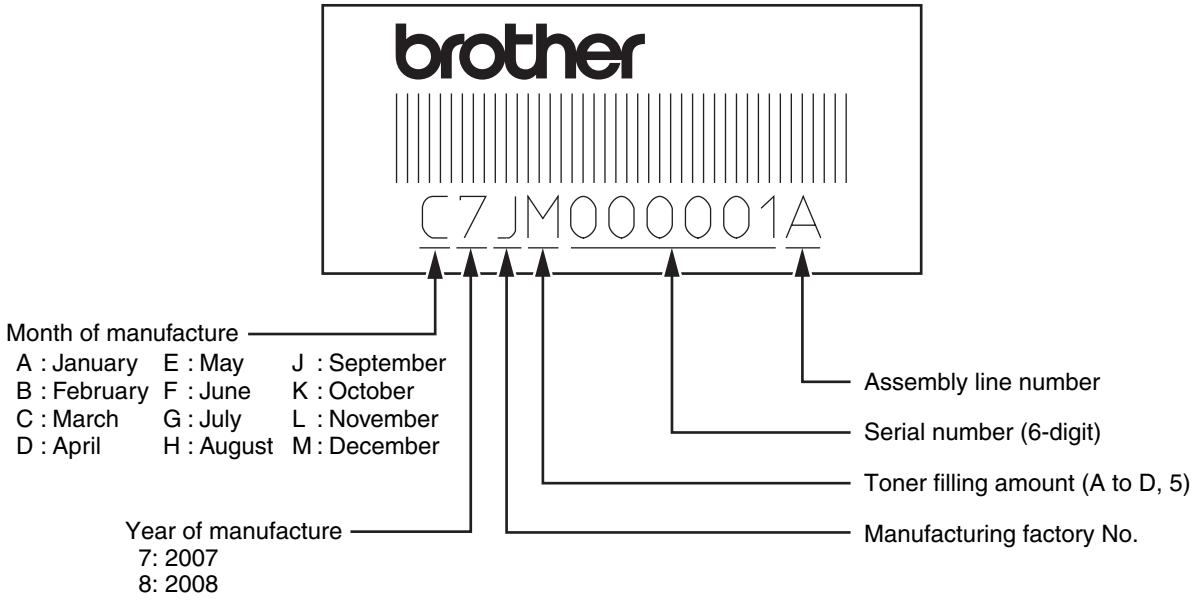

Fig. App. 1-5

<Location>

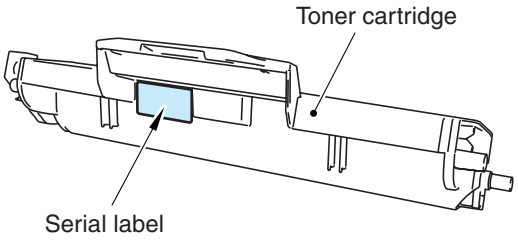

Fig. App. 1-6

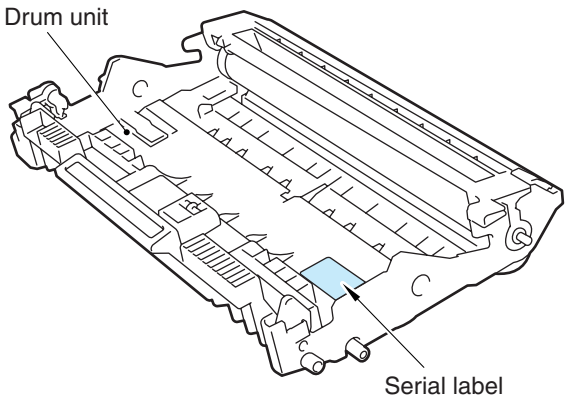

Fig. App. 1-7

Confidential

APPENDIX 2 SCREW CATALOGUE

Taptite bind B

Taptite bind B M3x10	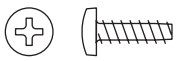
Taptite bind B M4x12	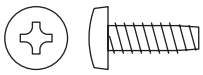

Taptite cup B

Taptite cup B M3x8	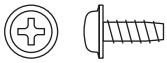
Taptite cup B M4x12	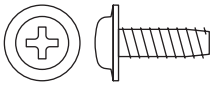

Taptite cup S

Taptite cup S M3x6 SR	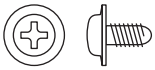

Taptite flat B

Taptite flat B M3x10	

Screw pan (S/P washer)

Screw pan (S/P washer) M3.5x6	

Taptite pan (S/P washer)

Taptite pan (S/P washer) S M3x8	

Taptite pan

Taptite pan B M4x14	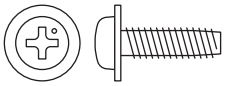

Confidential

APPENDIX 3 DELETION OF PERSONAL INFORMATION

Personal information such as wired and wireless network settings in the machine is recorded in the EEPROM on the Main PCB. Follow the procedure described below to delete this information with a single operation.

(Refer to "1.2 User Mode" (Network Reset 1) in Chapter 5.)

<Operating Procedure>

(1) Check that the front cover is closed.

(2) Turn ON the power switch while holding down the [Go] button.
Check that Toner/Drum/Error LEDs are lighted.

(3) Release the [Go] button and check that all LEDs are out.

(4) Press the [Go] button 7 times and check all LEDs are lighted for one second.

APPENDIX 4 REFERENCES

This page provides the retrieve information. It is possible to get the instruction of the subject by just clicking on the link below.

1. Message indication

(Refer to "2.2 Message indication", Chapter 1 of the Service Manual.)

2. Diameter of rollers

(Refer to "4.2 Diameter of Rollers", Chapter 1 of the Service Manual.)

3. Machine specification

(Refer to "2. SPECIFICATIONS LIST", Reference 1 of the Service Reference Manual.)

4. Paper specification

(Refer to "2.6 Paper", Reference 1 of the Service Reference Manual.)

5. Toner cartridge weight information

(Refer to "APPENDIX 1 TONER CARTRIDGE WEIGHT INFORMATION", of the Service Reference Manual.)

6. Parts life reset

(Refer to "Resetting the drum counter", Chapter 5 of the Service Manual.)

APPENDIX 5 GLOSSARY

■ ACRONYMS AND TECHNICAL TERMS

In this manual and the Service Reference Manual, the manual specific acronyms and technical terms are used in addition to the generally used ones. The table below contains typical acronyms and technical terms that are used throughout these manuals.

ASIC	Application Specific Integrated Circuit
CN	Connector
CO	Collimate
CPU	Central Processing Unit
dB	decibel
DEV	Development
dpi	dots per inch
EEPROM	Electronically Erasable and Programmable Read Only Memory
HEX	Hexadecimal
HVPS	High Voltage Power Supply
IF	Interface
IPv4	Internet Protocol Version 4
IPv6	Internet Protocol Version 6
LD	Laser Diode
LED	Light Emitting Diode
LVPS	Low Voltage Power Supply
N/A	Not Applicable
NC*	Network Circuit
NVRAM	Nonvolatile Random Access Memory
ppm	pages per minute
RAM	Random Access Memory
SW	Switch

* Excluding the acronym shown on the wiring diagram or circuit diagram.