how to use and enjoy your

Sewing Machine

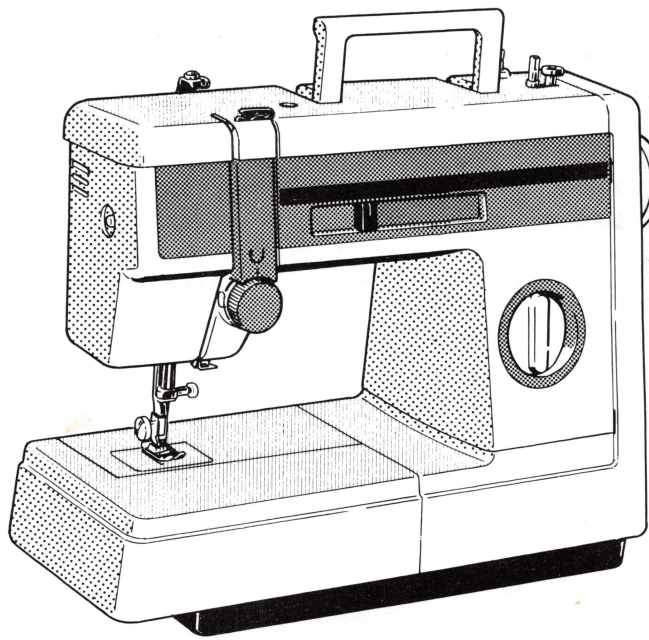

CAUTION

WHEN CHANGING NEEDLE, BOBBIN OR LIGHT BULB, OR WHEN SEWING MACHINE IS NOT IN USE, IT IS RECOMMENDED THAT ELECTRICAL SUPPLY PLUG IS DISCONNECTED TO AVOID ELECTRICAL HAZARDS.

CONTENTS

1 Knowing Your Sewing Machine 2

PRINCIPAL PARTS 2
OPERATING YOUR MACHINE 3
VARIOUS CONTROL 4
Stitch length knob 4
Stitch width knob 4
NEEDLE. 5
How to change the needle 5
How to check the needle. 5
TWIN NEEDLE. 5
UPPER (NEEDLE) THREAD. 6
LOWER (BOBBIN) THREAD. 7
How to wind bobbin 7
How to remove and insert bobbin case 8
How to thread bobbin case 8
How to pull up lower thread. 9
FREE-ARM SEWING 9
THREAD TENSION . . . . . ·10
Upper thread tension . . . . . ·10
Lower thread tension. . . . . ·10
RELATIVE CHART OF SEWING MATERIAL, NEEDLE & THREAD· . . ·12
SEW-LIGHT . . . . . ·12
Sew light switch. . . . . ·12
How to change the bulb . . . . . ·12

2. Straight Stitching 13

How to start sewing. . . . . ·13
How to change sewing direction. . . . . ·13
How to finish your sewing project . . . ·14
How to remove final sewing from machine . . . . . ·14
How to sew very thin material. . . . . ·14
How to guide your material . . . . . ·14

3 Zigzag Stitching 15

Simple zigzag stitch. . . . . ·15
Satin stitch. . . . . ·15

4 Buttonholes and Zipper Insertion 16

Buttonholes . . . . . ·16
Zipper insertion . . . . . ·18

5 Maintenance and Care of Your Machine 19

Cleaning . . . . . ·19
How to oil sewing machine . . . . . ·20
Check list for better sewing . . . . . ·22
Repacking the machine. . . . . ·23

1 Knowing Your Sewing Machine

Principal Parts

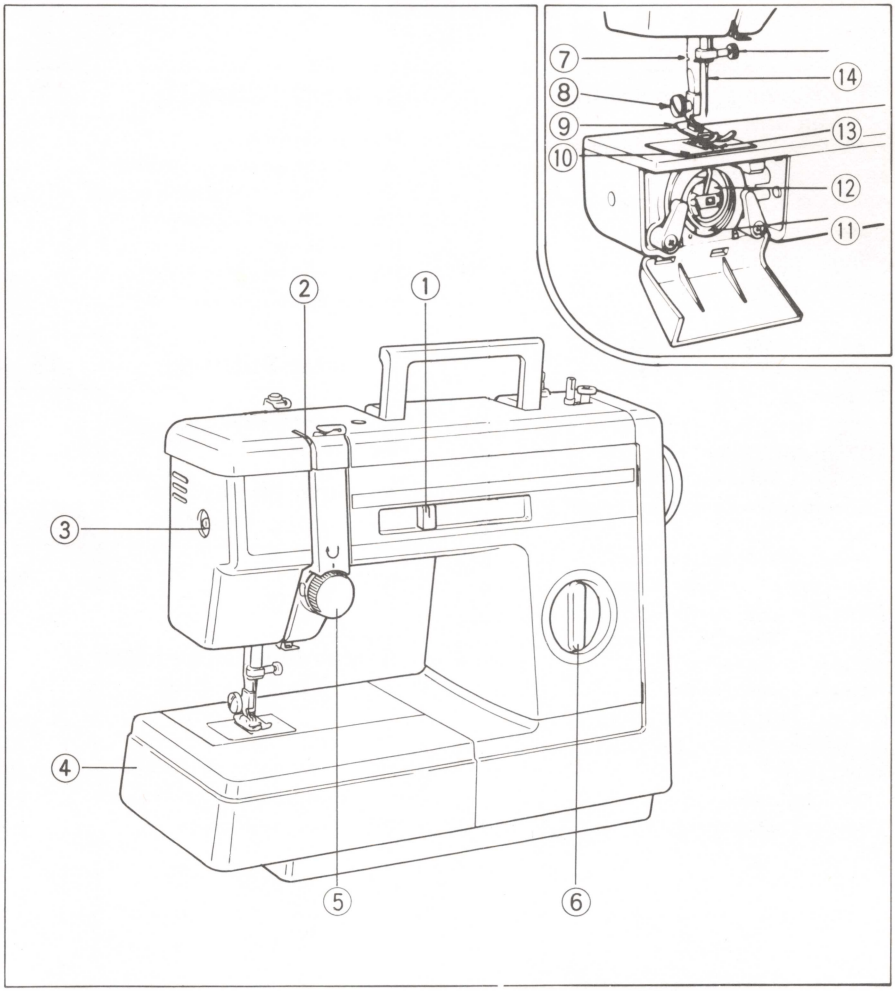

1. Stitch Width Knob
2. Thread Take-up Lever
3. Sew-light Switch
4. Extension Table
5. Upper Thread Tension Dial
6. Stitch Length & Reverse Sewing Knob
7. Thread Cutter
8. Presser Foot Screw
9. Presser Foot (Zigzag)
10. Needle Plate (Zigzag)
11. Shuttle Hook
12. Bobbin Case
13. Feed Dog
14. Needle
15. Needle Clamp Screw

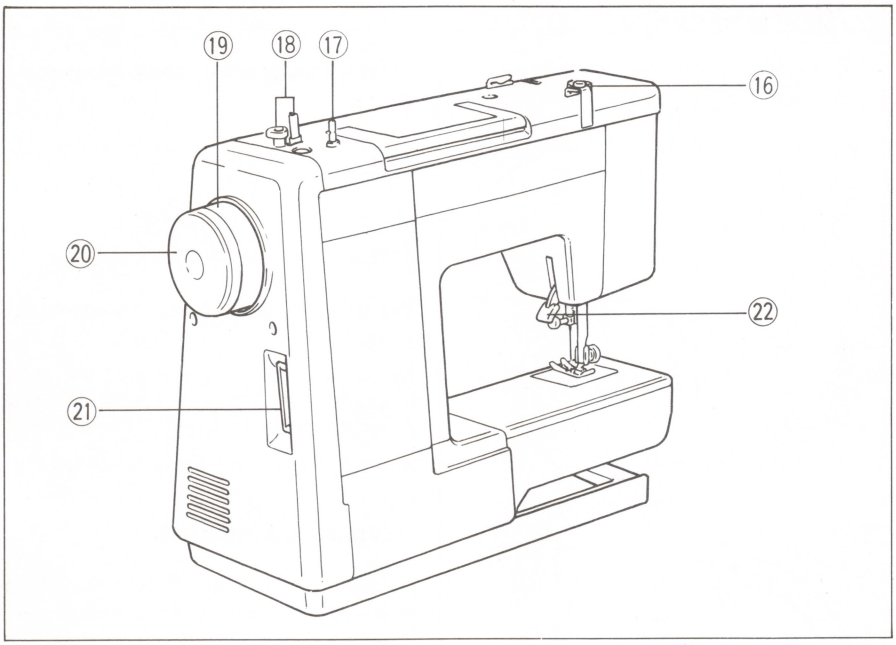

16. Thread Guide and Bobbin Winder Disc.
17. Spool Pin
18. Bobbin Winder Device
19. Balance Wheel
20. Stop Motion Knob
21. 3-prong Socket
22. Presser Foot Lifter

Operating Your Sewing Machine

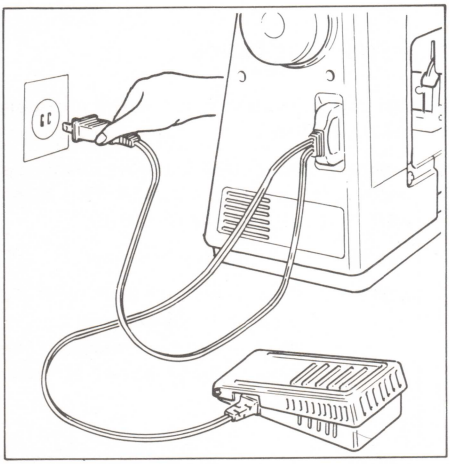

CONNECTING PLUGS

1. First connect the three-prong plug into the machine.
2. Then connect the electric supply plug into a wall outlet.

CONTROLLING SEWING SPEED

Place foot on foot control.
When foot control is pushed down lightly, machine will run at a low speed.
When pressure on foot control is increased, machine will pick up speed.
When foot control is released, machine will stop.
Care should be taken that nothing is placed on foot controller when machine is not in use.

Various Control

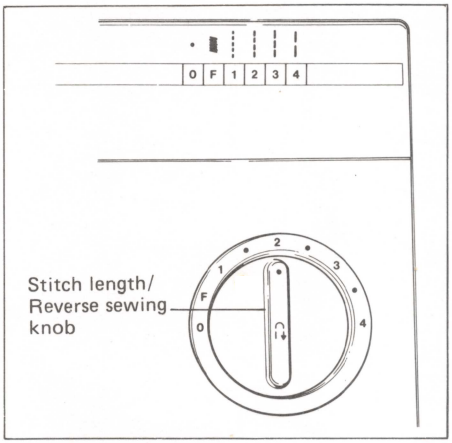

STITCH LENGTH/REVERSE SEWING KNOB

STITCH LENGTH KNOB

The stitch length is regulated by turning this knob.

Numbers on the ring represent the stitch length. THE HIGHER THE NUMBER, THE LONGER THE STITCH.

The "0" means that material is not fed.

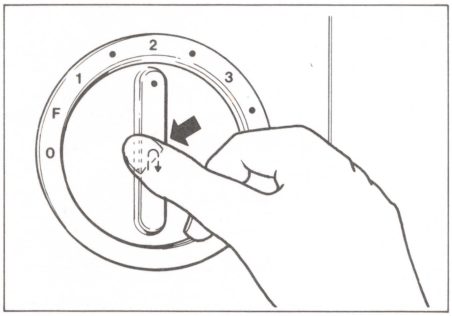

REVERSE SEWING KNOB

To sew in reverse, push this knob as far as it will go and keep it in this position until you wish to sew forward.

When you release, it springs back for forward sewing.

Reverse sewing is used for back tacking and reinforcement of the seam.

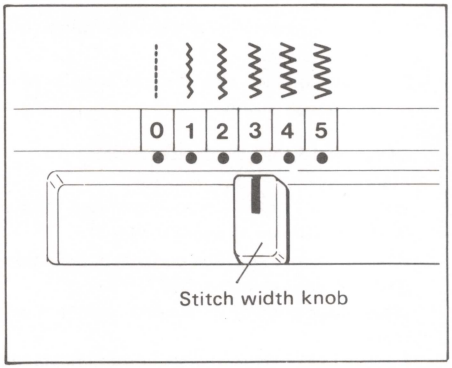

STITCH WIDTH KNOB

The zigzag width is regulated by operating the stitch knob.

Numbers above the knob represent the width of stitch. THE HIGHER THE NUMBER, THE WIDER THE STITCH.

The "0" means straight stitch only.

NOTE: 1. Do not move the knob while the needle is in the material.
2. When using twin needle, knob should always be set at under "3".

Needle

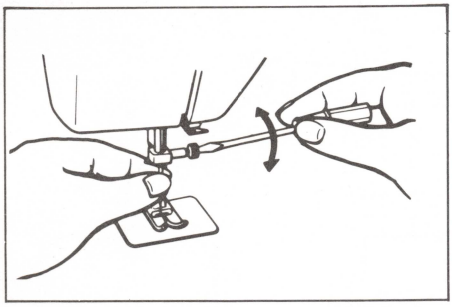

HOW TO CHANGE THE NEEDLE

1. Raise needle bar to its highest position.
2. Loosen needle clamp screw and remove old needle.
3. Insert new needle into needle clamp hole as far as it will go against the needle stop. Make sure the flat side of the needle faces toward the back and the long groove toward you.
4. Tighten needle clamp screw securely.

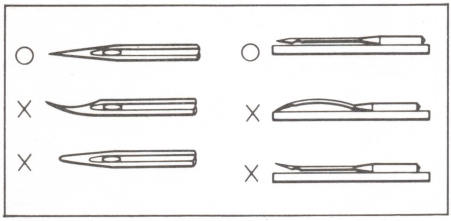

HOW TO CHECK THE NEEDLE

1. The sewing needle must always be straight and sharp for smooth sewing.
2. To check if needle is bent, place flat side of needle down as shown in illustration at left.

Twin Needle

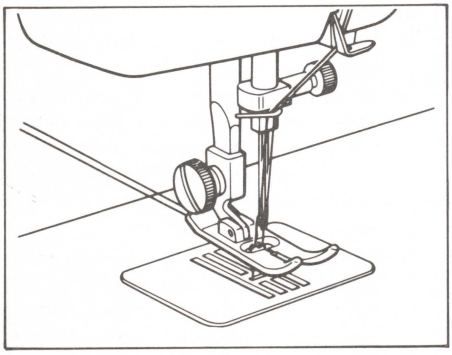

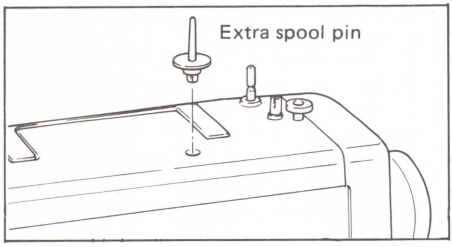

Your sewing machine is specially constructed for optional twin needle sewing by setting extra spool pin into hole on the top of machine. You can use either one or two colors of upper thread.

Make sure that two threads used to thread twin needle are of the same weight.
If thread is not of the same weight, stitching will be faulty.

INSERTING TWIN NEEDLE
Insert in same manner as single needle. Flat side of needle should face toward back and long groove should face you.

THREADING TWIN NEEDLE
Follow instructions for single needle threading (see page 6), but thread each needle separately. The groove should face you.

NOTE FOR TWIN NEEDLE SEWING
1. Use ZIGZAG PRESSER FOOT.
2. Use stitch width knob at under "3".

Upper (Needle) Thread

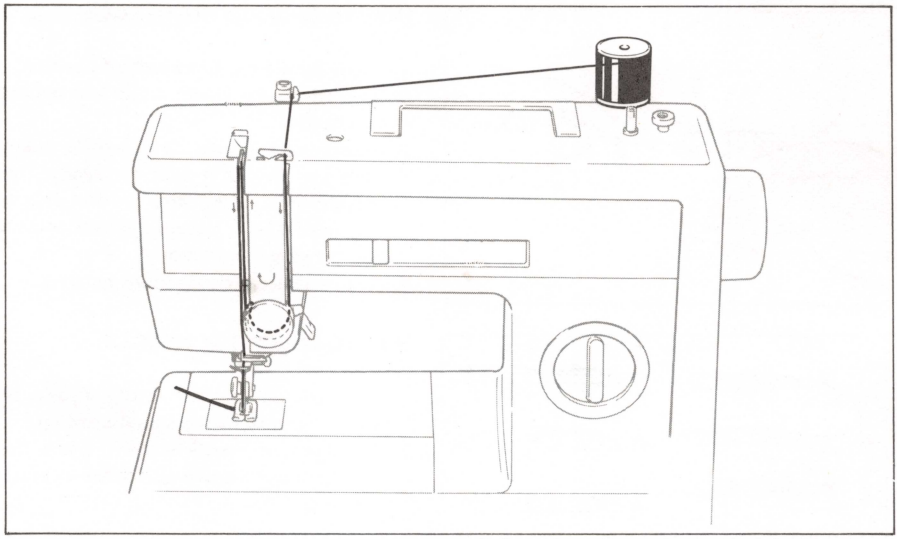

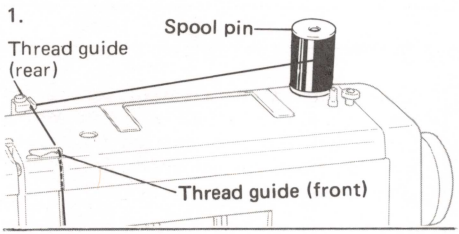

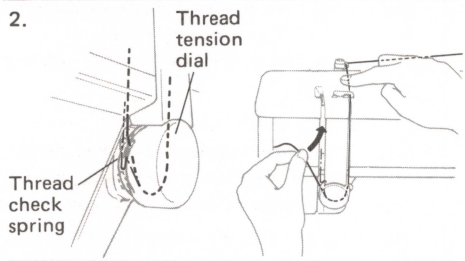

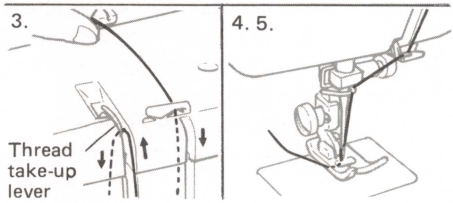

Before threading, raise presser foot and turn the balance wheel toward you so that the thread take-up lever raises to its highest position.

Then raise spool pin and place thread spool on the pin.

1. Pass thread through the both of thread guides from rear to front.
2. Bring thread down and up through upper thread tension dial from right to left so that the thread picks up the thread check spring. With holding thread as illustrated, *pull up thread and deliver into the eye in tension disc.*
3. Thread take-up lever by guiding thread to back of lever and around to your left. Bring thread through slit by pulling it toward you and into eyelet.
4. Bring down and pass through the thread guard and guides.
5. Thread into the eye of the needle from front to back and draw the thread out about 2 inches (5 cm).

NOTE:

IF THE THREADING ORDER IS NOT CORRECT, THREAD BREAKAGE, STITCH SKIPPING AND WRINKLING OF FABRIC WILL OCCUR.

Lower (Bobbin) Thread

HOW TO WIND BOBBIN

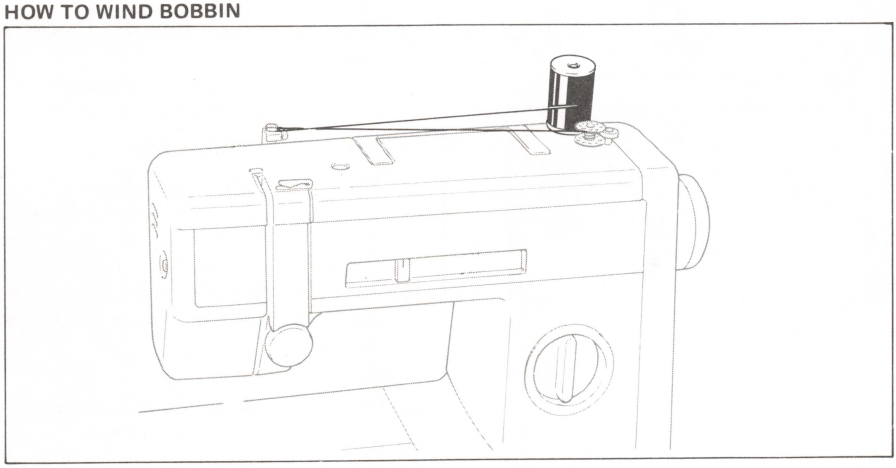

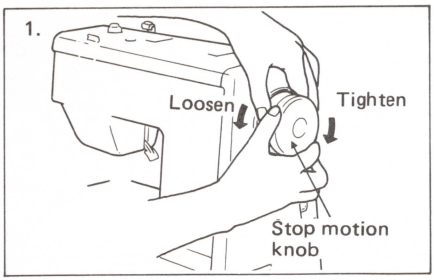

1. Loosen stop motion knob by turning it toward you.

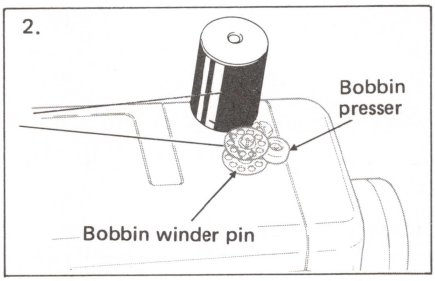

2. Place an empty bobbin on the bobbin winder pin.

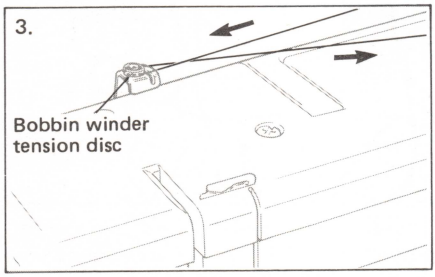

3. Place thread spool on the spool pin and take thread through bobbin winder tension disc.

4. Wind the thread a few times around the bobbin clockwise and push the bobbin toward bobbin presser. Start the machine gently.
5. Bobbin stops winding when full.
6. Push the bobbin to the left and remove it. Tighten stop motion knob securely.

HOW TO REMOVE AND INSERT BOBBIN CASE

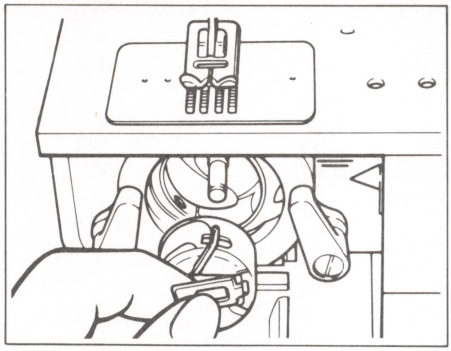

TO REMOVE BOBBIN CASE

1. Raise needle to its highest position.
2. Open the shuttle cover by turning it down.
3. Pull and open the latch of bobbin case.
4. Pull out bobbin case from the shuttle.

TO INSERT BOBBIN CASE

1. Raise needle to its highest position.
2. Holding bobbin case latch with metal finger of case pointing up, fit it into the notch at the top of shuttle race.
3. Push case back fully, and make sure the case in is the proper position and release the latch.

NOTE:

(A) 4 inches (10 cm) of thread should be drawn out and left out of case.

(B) Latch of bobbin case should be open fully to prevent bobbin from coming out of case.

(C) If bobbin case does not fit in the machine properly it will come out from the shuttle immediately after starting to sew.

HOW TO THREAD BOBBIN CASE

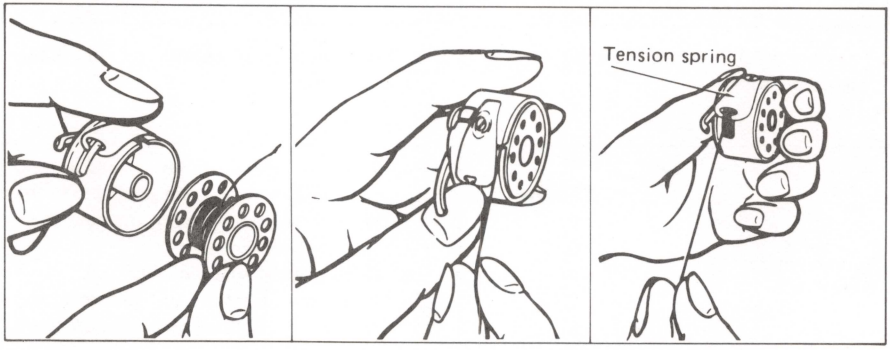

1. Unwind about 4 inches (10 cm) of thread from the bobbin. Insert wound bobbin into bobbin case.
2. Pull trailing thread into the slot of case.
3. Pull thread to the left under tension spring until thread enters into delivery eye.

HOW TO PULL UP LOWER THREAD

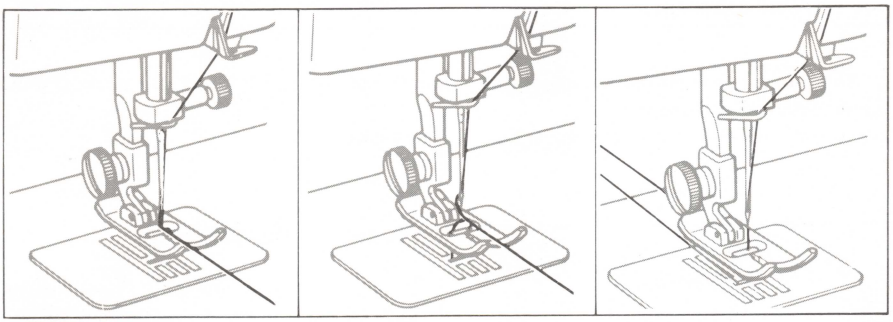

1. Raise needle and presser foot to the highest position. With left hand, hold the end of upper thread and with right hand, turn balance wheel toward you until the needle moves down and up again to its highest position.
2. Now upper thread catches the lower thread in a loop. Pull thread toward you so that lower thread will come up in a large loop from the presser foot.
3. Pull both threads under the toes of presser foot and place them to the rear leaving about 4 inches (10 cm).

Free-Arm Sewing

For sewing tubular and hard to reach garment areas, free-arm sewing is most convenient.

To make your machine a free-arm model, simply slide out extension table.

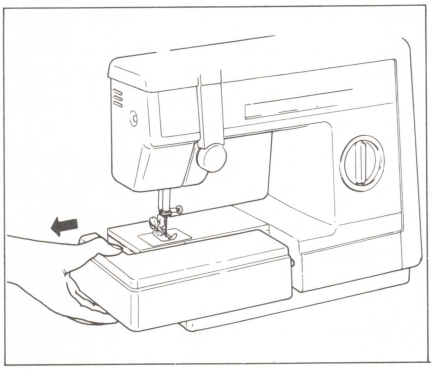

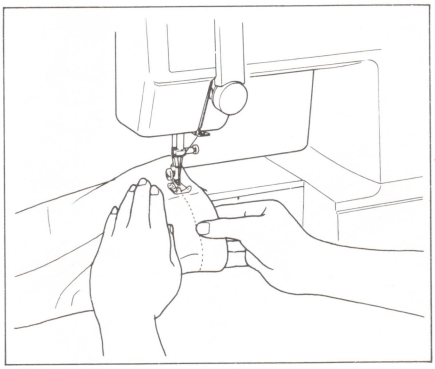

Accessories are contained in extension table.

Thread Tension

It is important that tension of upper and lower threads be equal to prevent puckering of material or other problems.
It is recommended that a test sample be made before starting to sew.

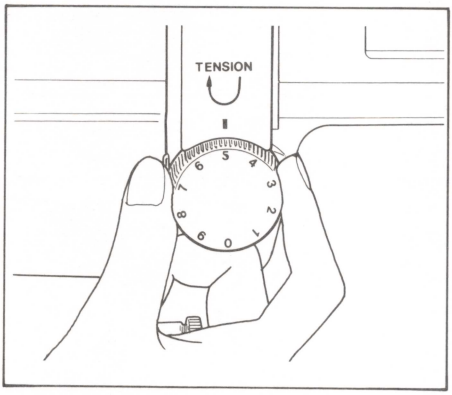

UPPER THREAD TENSION

To regulate upper thread tension, merely turn thread tension dial with your fingers after lowering the presser foot.

THE HIGHER THE NUMBER, THE TIGHTER THE TENSION.

To increase tension: Turn dial to right to higher number.

To decrease tension: Turn dial to left to lower number.

NOTE: When sewing the zigzag stitch, it requires less upper tension than straight stitch.

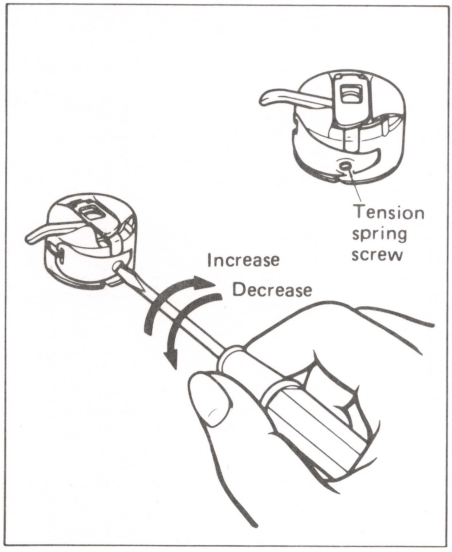

LOWER THREAD TENSION

Lower thread tenion has been already adjusted for general use at the factory before shipment, but when sewing extremely thin or heavy material, it also requires adjusting the lower thread tension.

To regulate the lower thread tension, turn small screw on the tension spring of the bobbin case with the small screw driver.

To increase tension: Turn the small screw clockwise very slightly.

To decrease tension: Turn the screw counterclockwise very slightly.

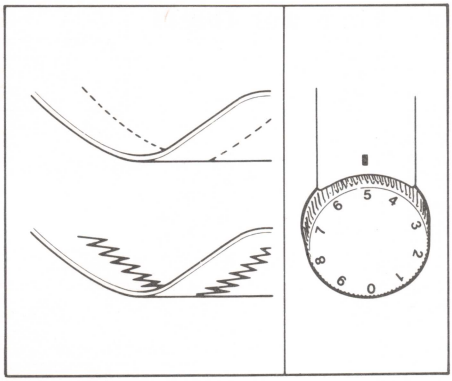

PERFECT STITCHING

The tension of the upper and lower threads should be equal and just sufficiently strong to lock both threads in the center of the work.

Perfect stitch shows flat and no puckering result on the material.

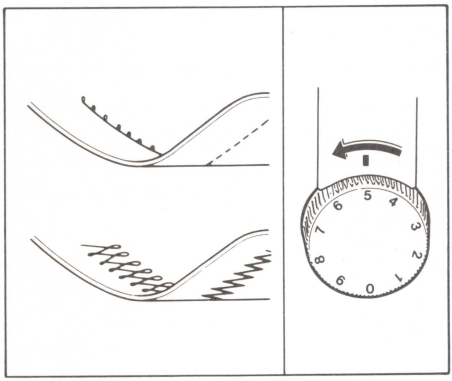

INCORRECT STITCH (A)

The upper thread lies on the surface of the material by pulling the lower thread up as shown.

This is caused by tight tension on the upper thread or loose tension on the lower thread.

To correct this, turn the upper thread tension dial to a lower number.

When perfect stitch cannot be obtained by only upper thread tension dial, adjust the bobbin tension accordingly.

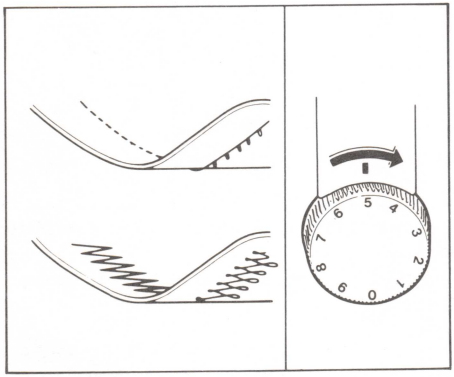

INCORRECT STITCH (B)

The lower thread lies on the under surface of the material by pulling upper thread down as shown.

This is caused by loose tension on the upper thread or tight tension on the lower thread.

To correct this, turn the upper thread tension dial to a higher number.

When perfect stitch cannot be obtained by only upper thread tension dial, adjust bobbin tension accordingly.

NOTE: We recommend you to make test samples before starting sewing.

Relative Chart of Sewing Material, Needle and Thread

SEWING MATERIALS		NEEDLE SIZES	THREAD SIZES
VERY THIN	Fine tricot, Fine lace, Thin linen, Silk, Tulle, Chiffon	9	Cotton: 80–120 Synthetic Fine Mercerized Cotton
LIGHTWEIGHT	Organdy, Jersey, Voile, Taffeta, Synthetics, Silk, Batiste	11	Cotton: 60–80 Silk: "A" Synthetic Mercerized 50
MEDIUM	Cotton, Gingham, Poplin, Percale, Pique, Satin, Velvet, Lightweight wool Fine corduroy, Suitings	14	Cotton: 50–60 Silk: "A" Synthetic Mercerized 50–60
HEAVY	Denim, Gabardine, Tweed, Corduroy	16	Cotton: 40–50 Mercerized Heavy-Duty
VERY HEAVY	Canvas, Overcoating, Upholstery	18	Cotton: 30–40 Mercerized Heavy-Duty

NOTE: 1. Select correct size of needle and thread from above chart.
2. Use the same size thread for upper and lower threads.

Sew-light

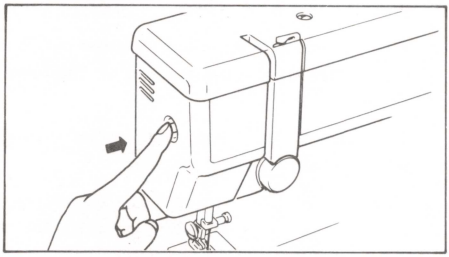

SEW LIGHT SWITCH BUTTON

To switch the light on or off, push the sew-light switch button.

HOW TO CHANGE THE LIGHT BULB

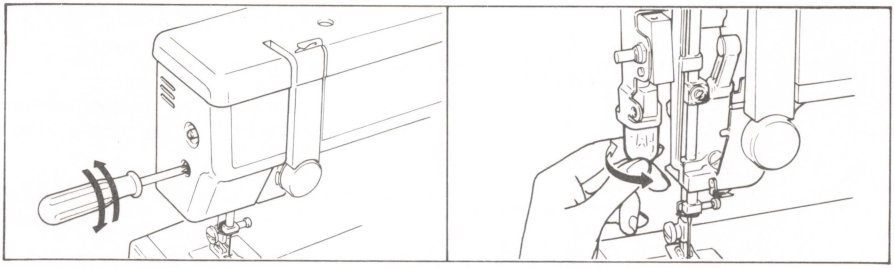

1. Remove face plate by loosing a screw on face plate.
2. Remove light bulb by turning it counterclockwise.
3. Replace light bulb and fix face plate.

NOTE: 1) Make sure to disconnect electric supply plug from wall outlet before changing light bulb.
2) Always use CORRECT LIGHT BULB.
MAXIMUM INPUT OF LAMP

12W. . . . .110/115V AREA
15W. . . . .220/240V AREA

2 Straight Stitching

STITCH LENGTH	:	F ~ 4
STITCH WIDTH	:	0
NEEDLE	:	Single

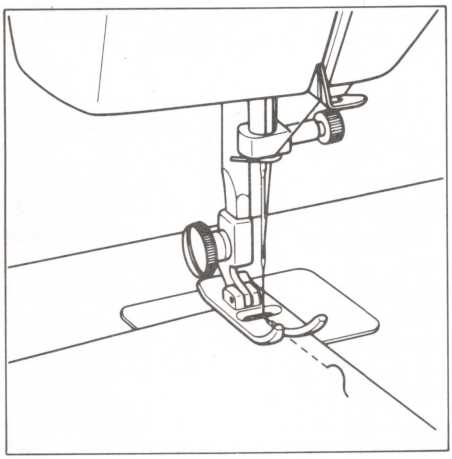

HOW TO START SEWING

1. Raise needle to its highest position and lift presser foot.
2. Pull up lower thread by turning the balance wheel toward you and place both upper and lower thread to the left.
3. Place material under presser foot and position needle 3/8 inch (1 cm) from material edge.
4. Lower presser foot.
5. For reverse sewing, push reverse sewing knob as far as it will allow. Reverse sewing is used where reinforcement is needed.
6. Release reverse sewing knob and start sewing in forward direction.

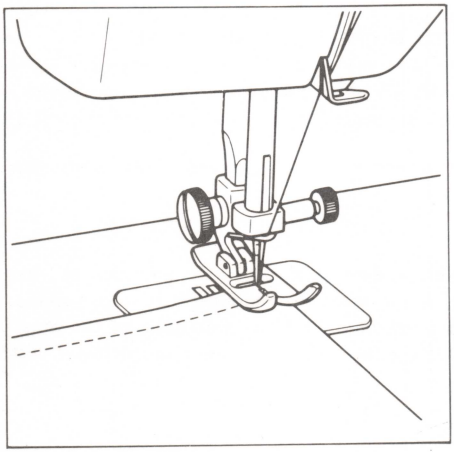

HOW TO CHANGE SEWING DIRECTION

1. Stop machine at the turning point while the needle is in the material.
2. Raise the presser foot and turn the material to the new direction while the needle acts as the axis.
3. Lower the presser foot and start sewing in new direction.

NOTE: In case of twin needle sewing, raise the needle at the turning point.

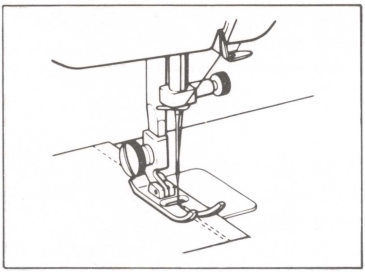

HOW TO FINISH YOUR SEWING PROJECT

(REVERSE STITCHING)

Reverse stitching is used to reinforce stitches near the edge of material or wherever reinforcement is needed.

1. This is done by stitching to the edge of material .... by stopping.
2. Press reverse knob and stitch backwards for 3/8 inch (1 cm) from material edge.

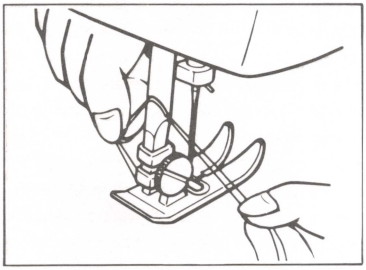

HOW TO REMOVE FINAL SEWING FROM MACHINE

1. Stop the machine.
2. Raise needle to its highest position and make sure that the thread take-up lever is also to its highest position.
3. Lift presser foot and pull out the material gently to the left side diagonally.
4. Cut both threads on the thread cutter.
5. Leave about 4 inches (10 cm) of threads and pull them between toes of the presser foot to the rear while the thread take-up lever is at the highest position, and you are ready to sew again without any chance of thread pulling out of the needle.

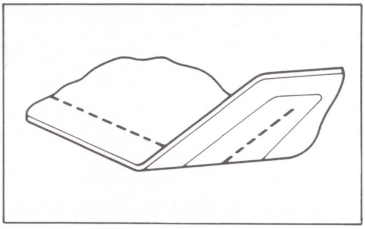

HOW TO SEW VERY THIN MATERIAL

An underlay of thin paper is useful to eliminate skipped stitches and puckering on very thin material.

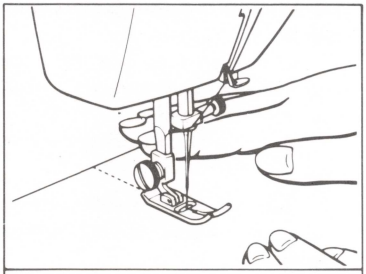

HOW TO GUIDE YOUR MATERIAL

Do not pull the material. Let the machine do the work. Merely guide the material with your fingers in front of the presser foot as shown in the illustration.

If you pull the material, your needle might either bend or break.

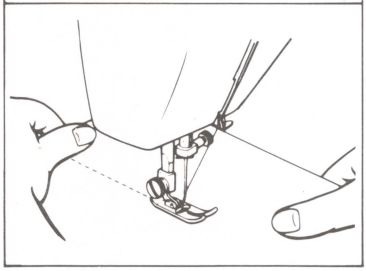

However, in case of special materials, such as tricot, crepes, knits, etc., we recommend that you support the material both in front and back of the presser foot with gentle tension as shown in the lower illustration.

3 Zigzag Stitching

STITCH LENGTH	:	1 ~ 4 (For SATIN STITCH, set at F)
STITCH WIDTH	:	1 ~ 5 (Twin needle sewing, always set at 3)
NEEDLE	:	Single or Twin Needle

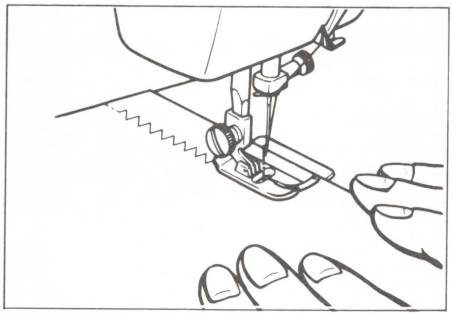

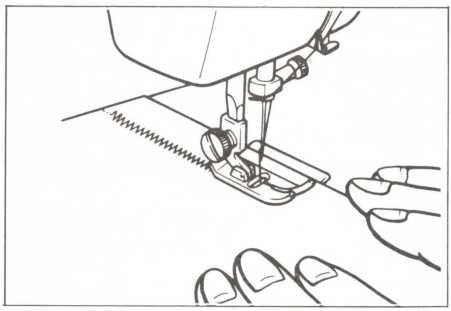

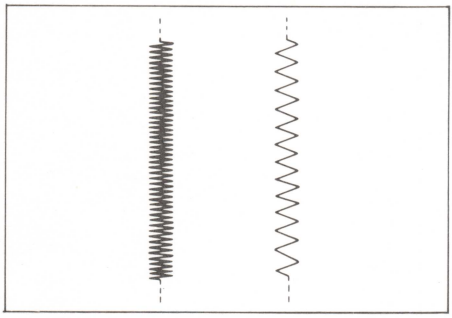

SIMPLE ZIGZAG STITCH

Set stitch length lever in between 1—4 for simple zigzag stitch

1. With stitch length to between 0-1 sew 5-6 *straight* stitches for reinforcement.
2. Set stitch width to your desired width and begin sewing.
3. Reset stitch width to "0" and set stitch length to between 0-1 to again reinforce stitches before removing work from machine.

NOTE: Zigzag stitching requires less upper thread tension than straight stitching.

SATIN STITCH

When stitch length is set between 0-1, it produces the "SATIN STITCH" which is used for making fine buttonholes or decorative stitches.

NOTE: It is recommended that a *test sample* be made before starting sewing.

4 Buttonholes and Zipper Insertion

Buttonholes

STITCH LENGTH	:	For SATIN STITCH set dial to between 0 ~ 1
STITCH WIDTH	:	See Instruction Below
NEEDLE	:	Single

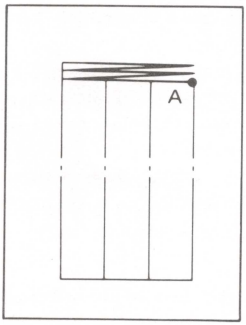

PROCEDURE FOR MAKING BUTTONHOLE

Step A: Bar Tack

1. Set Stitch Width at "5".
2. Lower presser foot and sew 2 to 3 stitches.
3. Stop the machine when the needle is in the material at the right side of stitches. (Position A)

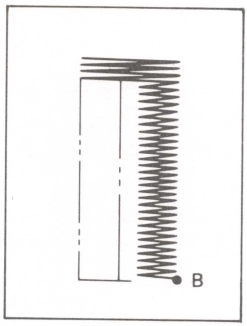

Step B: Right Row

1. Lift presser foot.
2. Set Stitch Width at "2".
3. Lower the presser foot and sew predetermined length.
4. Stop the machine when the needle is in the material at the right side of stitches. (Position B)

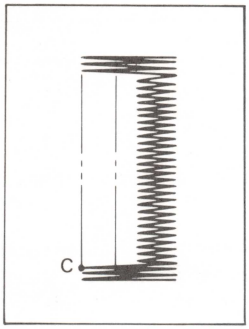

Step C: Final Bar Tack

1. Lift presser foot.
2. Set Stitch Width at "5".
3. Lower the presser foot and sew 2 to 3 stitches.
4. Stop the machine when the needle is in the material at the left side of stitches. (Position C)

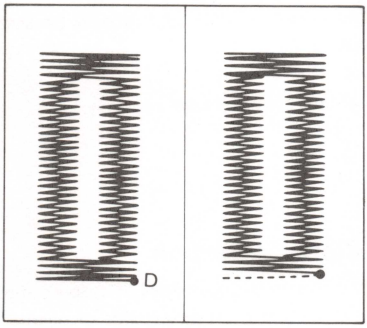

Step D: Left Row

1. Lift presser foot.
2. Turn the material 180 degrees while the needle acts as the axis and set the Stitch Width Dial to 0. Lower the presser foot.
3. Turn the balance wheel toward you to sew one stitch. This action changes, needle position from left to right. Lift presser foot.
4. Set Stitch Width at "2".
5. Sew row until needle reaches other bar tack. Stop the machine with needle in the material to right of stitches.

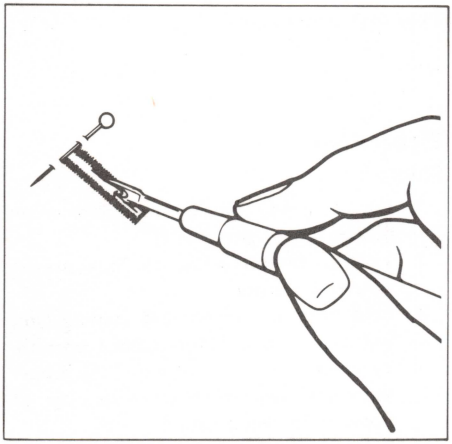

HOW TO SECURE STITCHING AND CUT MATERIAL FOR BUTTONHOLE.

1. To secure stitching, turn the material 90 degrees counter-clockwise and sew 5-6 straight stitches.
2. Remove the material from machine. Cut opening in buttonhole with seam ripper tool (not binluded). taking care not to cut through any stitching.
3. It is recommended that pins are placed across both ends of buttonhole for the protection against cutting bar tack stitching.

NOTE: 1. It is recommended that a test sample of buttonhole is made.
2. Use of tailors' chalk to mark length of buttonhole on material is recommended.

Zipper insertion

Your sewing machine has a zipper foot in the extension table.

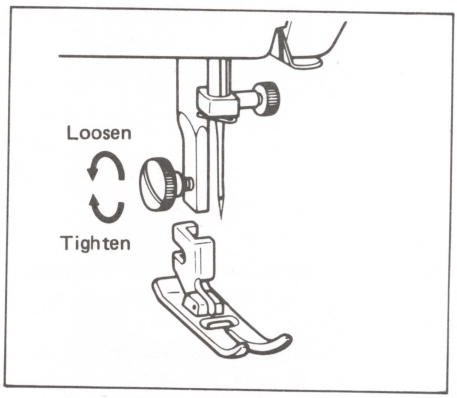

How to change the presser foot

1. Raise needle to its highest position and raise presser foot lifter.
2. Loosen presser foot thumb screw and remove presser foot.
3. Place grooved side of the new presser foot against the flat of the presser bar.
4. Tighten thumb screw securely.

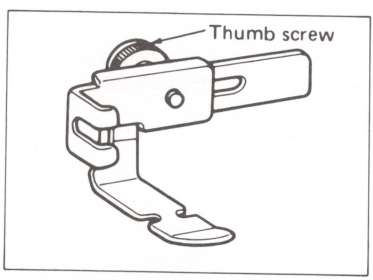

Zipper Insertion

Zipper foot is used to sew various types of zippers and can easily be positioned to right or left side of needle. When zipper is being sewn at right side of needle, position zipper foot by loosening thumb screw and sliding zipper foot to the left.

When the zipper is being sewn at left side of needle, position zipper foot by loosening thumb screw and sliding zipper foot to the right.

STITCH LENGTH	:	2–3
SITTCH WIDTH	:	0
PRESSER FOOT	:	Zipper Foot
NEEDLE	:	Single

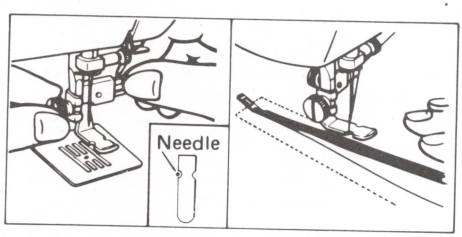

1. Lower needle into side notch located on presser foot (right or left).
2. Tighten thumb screw to lock presser foot into position.
3. Fold edge of material 3/4 inch (2 cm.) and place zipper under folded portion.
4. By guiding zipper foot along the zipper teeth you will stitch close to edge of zipper in correct position.
5. To sew opposite side of zipper, loosen thumb screw and position zipper foot (right or left).

Cleaning

The sliding parts of the shuttle race should be cleaned regularly so that lint does not accumulate.

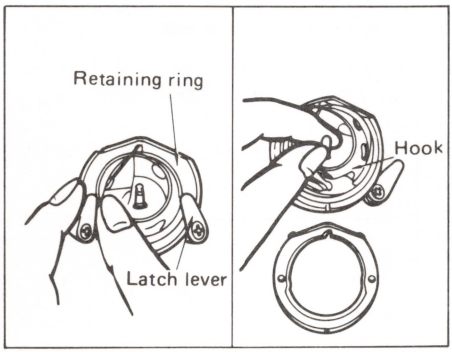

HOW TO REMOVE THE SHUTTLE HOOK

1. Raise needle to its highest position.
2. Open shuttle cover.
3. Take out bobbin case.
4. Push latch levers outside and remove retaining ring.
5. Remove hook by grasping center post of hook.

NOTE: When needle is lowered, shuttle hook cannot be removed.

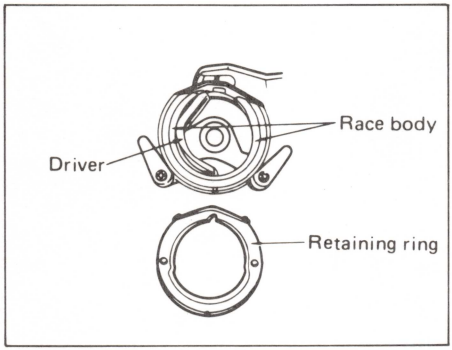

CLEANING SHUTTLE RACE

1. Remove accumulated lint and thread from the retaining ring, hook, driver and race body with brush.
2. A cloth dampened with machine oil should be used to wipe shuttle race clean.
3. Clean shuttle hook in same manner as above.
4. Reassemble.

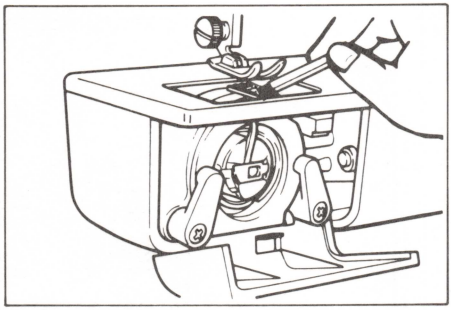

CLEANING FEED DOG

1. Take out needle plate.
2. Clean upper part of feed dog and shuttle race body with brush.

How to Oil Sewing Machine

A new sewing machine or the one that has not been in use for a long period of time should be oiled as per diagram below and in the next page.

OIL 1 to 2 DROPS TO THE POINTS MARKED

OIL 3 to 4 DROPS TO THE POINTS MARKED

OIL ONCE A WEEK IF MACHINE IS USED MORE THAN ONE HOUR PER DAY. IF MACHINE IS USED MORE OFTEN, OIL EVERY DAY.

After oiling, remove thread and with presser foot up, run machine fast. Be sure to wipe off any excess oil.

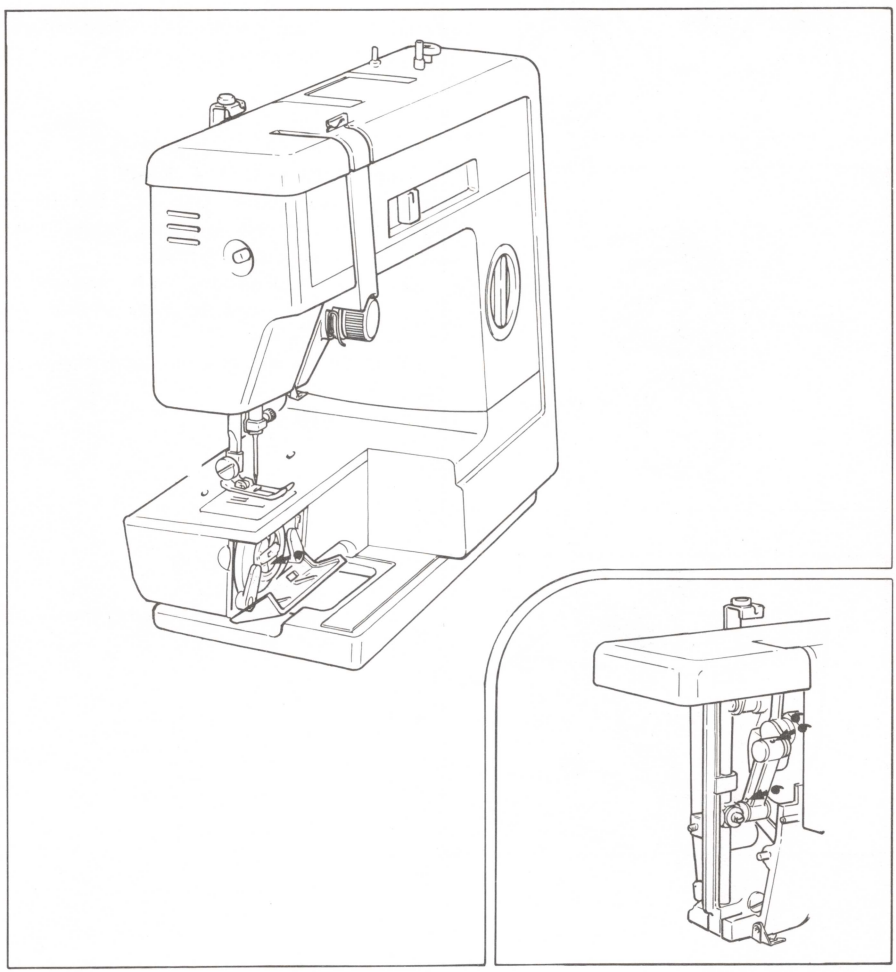

Occasionally, remove the side cover and top cover by loosening two screws and apply machine oil to the oiling points as below.

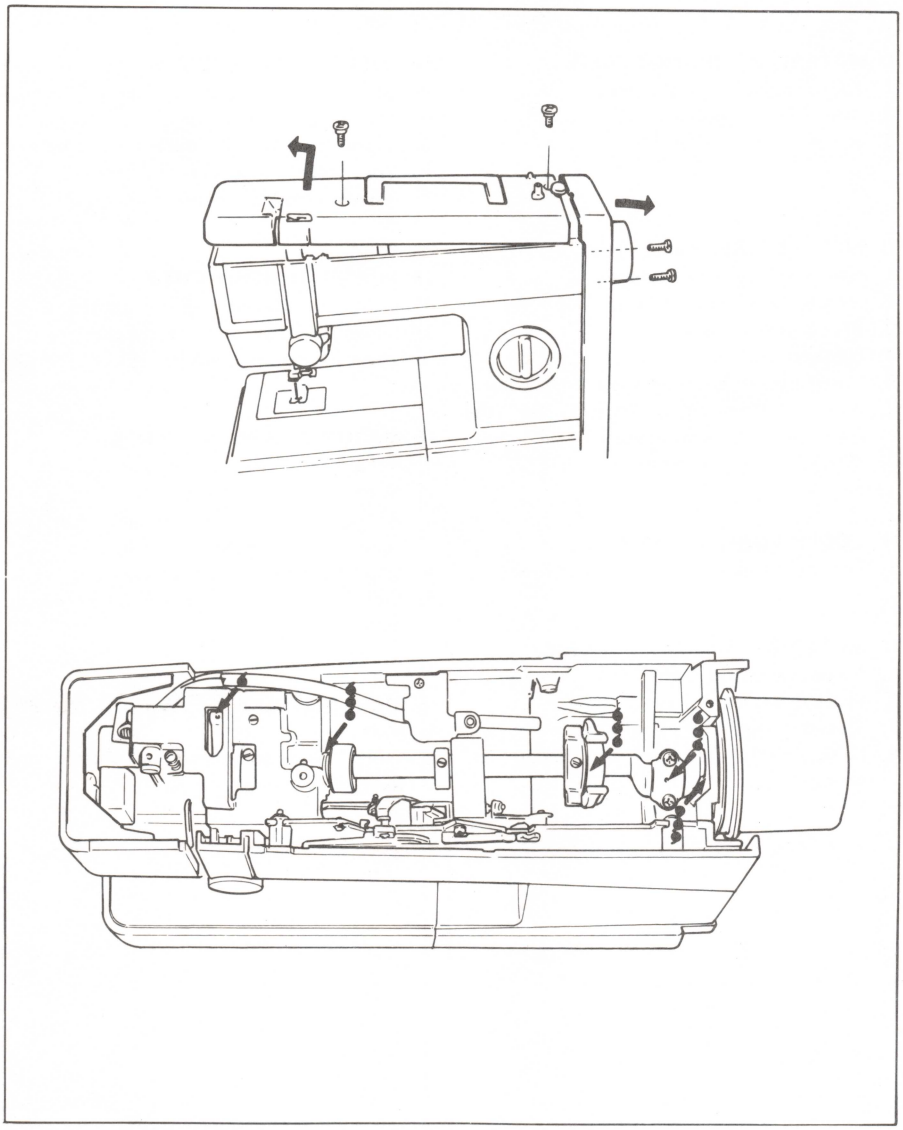

NOTE: If machine has not been used for a long period of time, oil tends to coagulate and operation of machine will not be smooth. Apply a few drops of oil to oiling points, and with presser foot up run machine for a few minutes. Then wipe off any excess oil.

Check List for Better Sewing

Check this list if you are having the following problems:

IF MATERIAL DOES NOT FEED.

1. Needle plate is out of position.
2. Stop motion knob is loose.
3. Stitch length regulator is at 0.

IF NEEDLE BREAKS

1. Needle is inserted incorrectly.
2. Needle clamp screw is loose.
3. Bent needle is used.
4. Upper threading is not correct.
5. Upper thread tension is too tight.
6. Wrong needle and thread for the material being sewn are used.
7. Material pulled excessively.

IF LOOPS FORM ON FABRIC

1. Tension of upper or lower thread is wrong.

IF MATERIAL SHOULD PUCKER

1. Thread tension is too tight.
2. Threading is not correct.
3. Thread is caught by something.
4. Lower thread is unevenly wound on bobbin.

IF UPPER THREAD CUTS

1. Upper threading is not correct.
2. Needle eye is not sharp.
3. Upper thread is too thick for needle eye.
4. Upper thread tension is too tight.
5. Needle is inserted incorrectly.

IF LOWER THREAD CUTS

1. Lower thread is entangled in shuttle.
2. Lower thread tension is too tight.
3. Lower threading is not correct.

IF MACHINE SKIPS STITCHES

1. Needle is not sharp and straight.
2. Needle is inserted incorrectly.
3. Wrong needle and thread for the material being sewn are used.
4. Upper threading is not correct.
5. Lint is clinging to under-side of needle plate.

IF MACHINE RUNS HEAVY OR NOISY

1. Machine is out of oil.
2. Lints has accumulated on shuttle and teeth of feed dog.

Repacking the Machine

Keep the carton and packing material for future use in the event it becomes necessary to reship the sewing machine.
(Improper packing or improper packing material could result in damage during shipping.)
Instructions for repacking the machine are illustrated below.

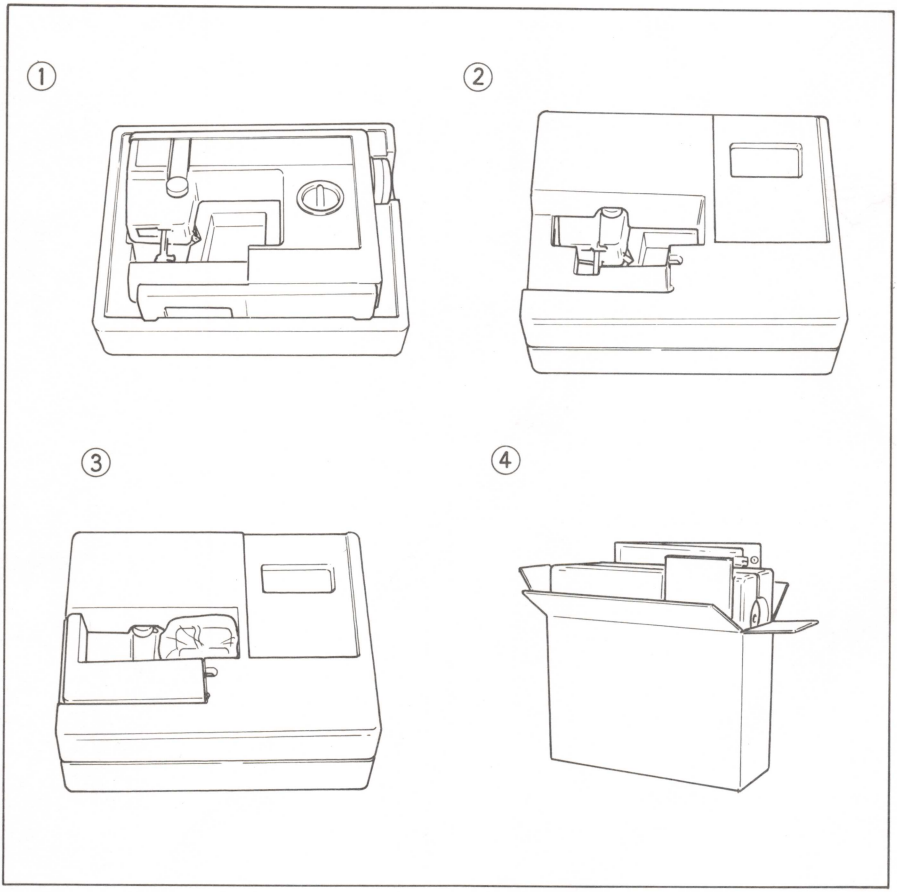

MEMO

Printed in Taiwan
(88/5)

MODEL VX808/VX809
ENG

194810-017