how to use and enjoy your

Sewing Machine

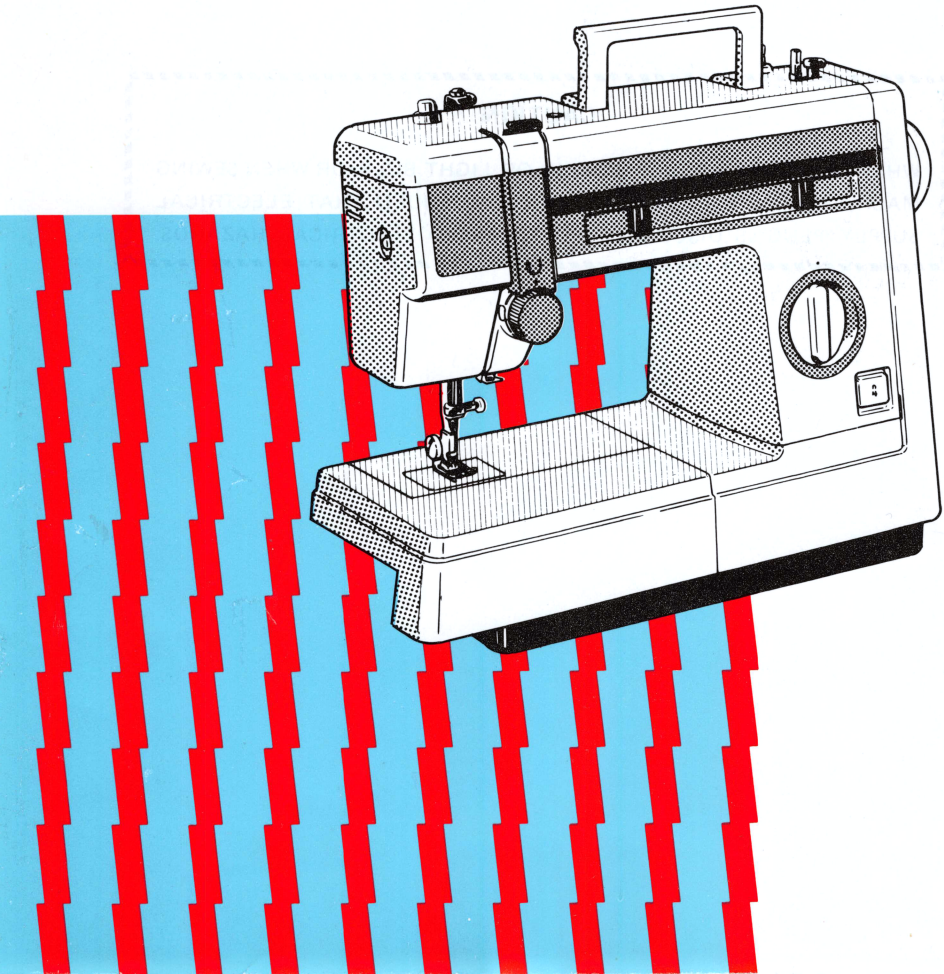

CAUTION

WHEN CHANGING NEEDLE, BOBBIN OR LIGHT BULB, OR WHEN SEWING MACHINE IS NOT IN USE, IT IS RECOMMENDED THAT ELECTRICAL SUPPLY PLUG IS DISCONNECTED TO AVOID ELECTRICAL HAZARDS.

CONTENTS

1. Knowing Your Sewing Machine 2

PRINCIPAL PARTS 2
OPERATING YOUR SEWING . . . . . .
MACHINE. 3
Connecting plugs. 3
Controlling sewing speed 3
ACCESSORIES 4
VARIOUS CONTROLS 5
Pattern selector knob 5
Stitch length knob 5
Stitch width knob 6
Reverse sewing button 6
PRESSER FOOT 7
NEEDLE. 8
How to change the needle 8
How to check the needle 8
TWIN NEEDLE 8
PRESSURE ADJUSTER 9
SEW-LIGHT. 10
Sew-light switch button 10
How to change the light bulb 10
FREE-ARM SEWING. 10
UPPER (NEEDLE) THREAD 11
LOWER (BOBBIN) THREAD. 12
How to wind bobbin. 12
How to remove and insert bobbin case. 13
How to thread bobbin case 13
How to pull up lower thread 14
RELATIVE CHART OF SEWING 14
THREAD TENSION 15
Upper thread tension 15
Lower thread tension 15

2. Straight Stitching 17

How to start sewing 17
How to change sewing direction 17
How to finish your sewing project . . .18
How to remove final sewing from machine. 18
How to sew very thin material 18
How to guide your material 18

3. Zigzag Stitching 19

Simple zigzag stitch 19
Satin stitch 19

4. Decorative Stitches 20

Decorative stitches 20

5. Built-in Stitches 21

Triple stretch stitch 21
Overedging stitch 21
Elastic stitch 22
Blind stitch 23
Shell tack 24
Scallop stitch 24
Decorative stitches 25
Fagoting stitch 26
Patch work 27

6. Buttonholes and Button Sewing 28

Buttonholes 28
Button sewing 30

7. Using Attachments 31

Zipper insertion 31
Darning 32

8. Various Other Stitches 33

Gathering 33
Applique 33
Attaching lace 34
Cording 34
Monogramming and Embroidering . . .35

9. Maintenance and Care of Your Machine 36

Cleaning 36
How to oil sewing machine 37
Check list for better sewing 39
Repacking the machine 40
Index 41

1 Knowing Your Sewing Machine

Principal Parts

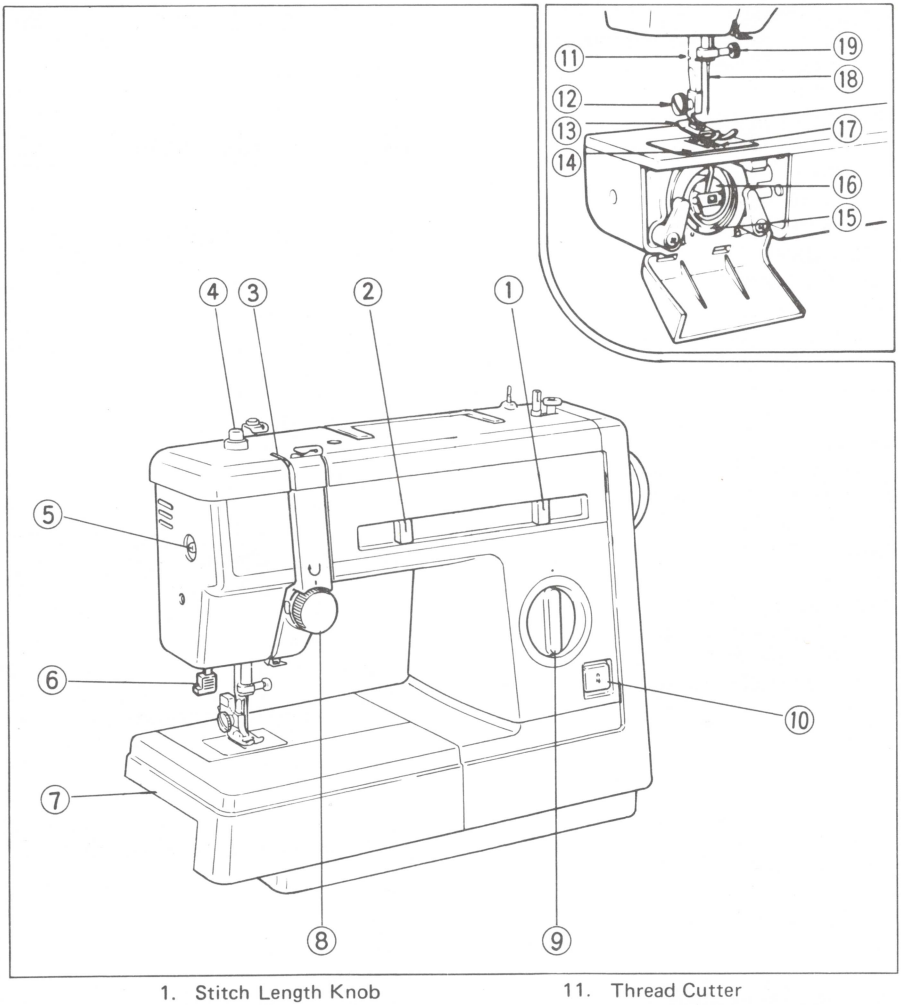

1. Stitch Length Knob
2. Stitch Width Knob
3. Thread Take-up Lever
4. Pressure Adjuster
5. Sew-light Switch
6. Buttonhole Lever
7. Extension Table
8. Upper Thread Tension Dial
9. Pattern Dial
10. Reverse Sewing Button
11. Thread Cutter
12. Presser Foot Screw
13. Presser Foot (Zigzag)
14. Needle Plate (Zigzag)
15. Shuttle Hook
16. Bobbin Case
17. Feed Dog
18. Needle
19. Needle Clamp Screw

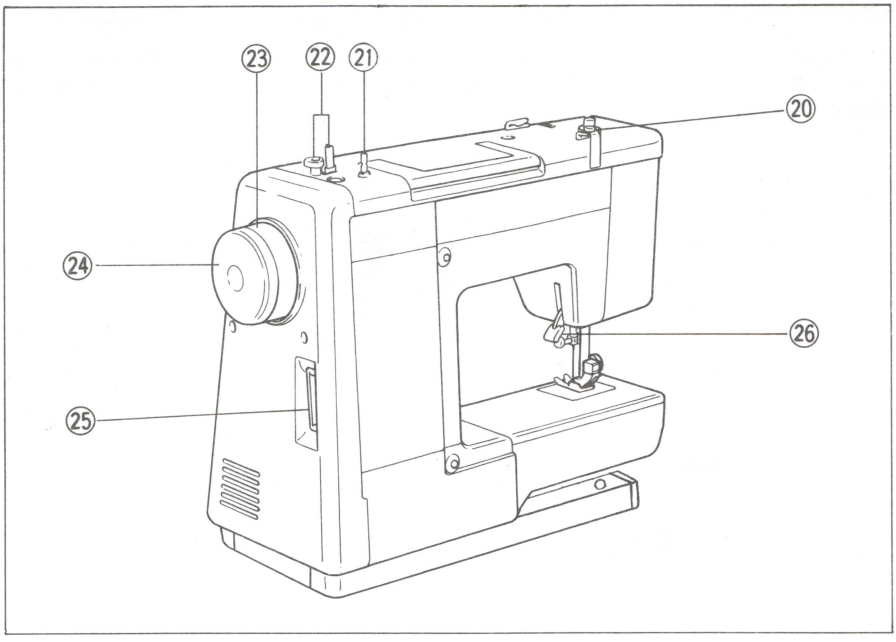

20. Thread Guide and Bobbin Winder Disc
21. Spool Pin
22. Bobbin Winder Device
23. Balance Wheel
24. Clutch Release
25. 3-prong Socket
26. Presser Foot Lifter

Operating Your Sewing Machine

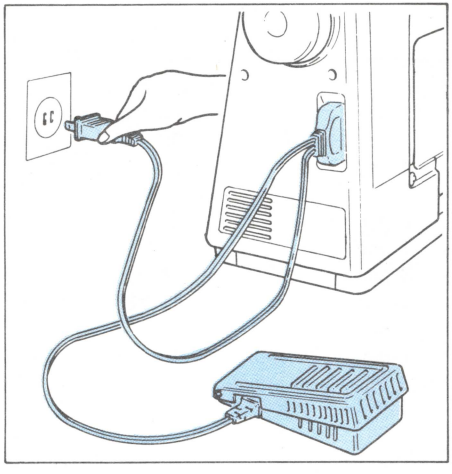

CONNECTING PLUGS

1. First connect the three-prong plug into the machine.
2. Then connect the electric supply plug into a wall outlet.

CONTROLLING SEWING SPEED

Place foot on foot control.

When foot control is pushed down lightly, machine will run at a low speed.

When pressure on foot control is increased, machine will pick up speed.

When foot control is released, machine will stop.

Care should be taken that nothing is placed on foof controller when machine is not in use.

Accessories

The following accessories are stored in the compartment under extension table. These accessories have been designed for easy and perfect sewing. For more details, see each page listed.

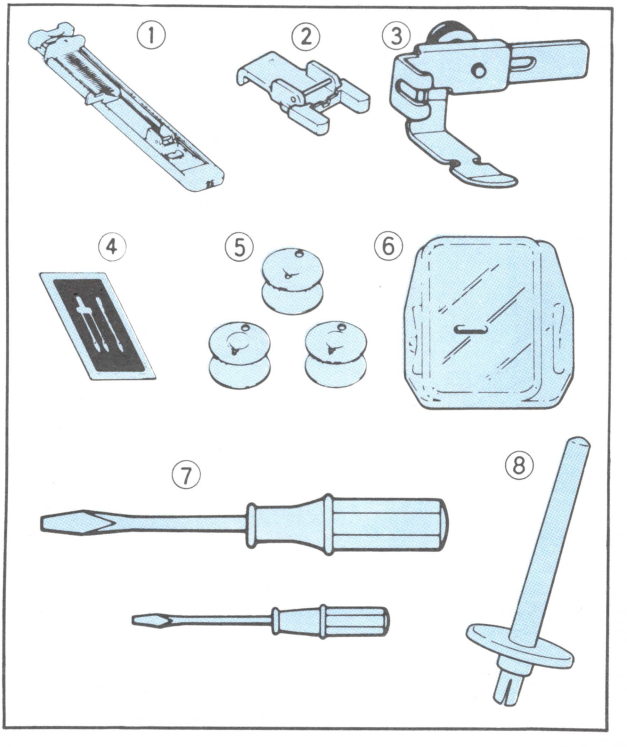

			See page
1.	Buttonhole Foot	1 pce.	28
2.	Button Sewing Foot	1 pce.	30
3.	Zipper Foot	1 pce.	31
4.	Needle Pack		
	(Regular Single Needle No.14. .	3 pcs.)	8
	(Twin Needle	1 pce.)	
5.	Bobbins	3 pcs.	12
6.	Darning Plate	1 pce.	30,32,35
7.	Screw Driver (Large & Small)	2 pcs.	
8.	Extra Spool Pin	1 pce.	8

Various Controls

PATTERN SELECTOR KNOB

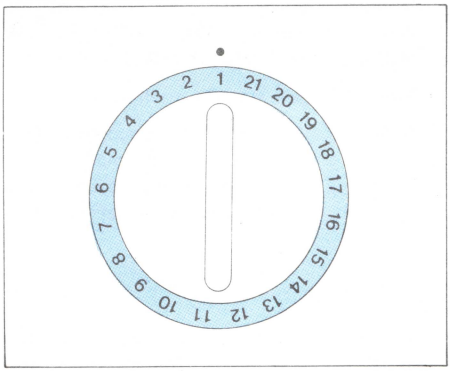

Your built-in pattern sewing machine enables you to obtain perfect buttonholes and various utility stitches, such as triple stretch stitch, elastic stitch, etc., by simply selecting the pattern on this selector.

1. Raise needle to its highest position.
2. Simply turn the selector and set the pattern you desire at the setting point.

NUMBERS AND STITCH OF PATTERN

1. Automatic Buttonhole
2. General Zigzag Stitch and Straight Stitch
3. Elastic Stitch
4. Double Action Stitch
5. Blind Stitch
6. German Blind Stitch
7. Shell Tack
8. Lightning Stitch
9. Scallop Stitch
10. Swan Stitch
11. Tulip Stitch
12. Link Stitch
13. Elastic Overlock Stitch
14. Slant Overlock Stitch
15. Comb Stitch
16. Arrowhead Stitch
17. Reverse Slant Overedge Stitch
18. Leaf Stitch
19. Fagoting Stitch
20. Feather Stitch
21. Triple Stretch Stitch

STITCH LENGTH KNOB

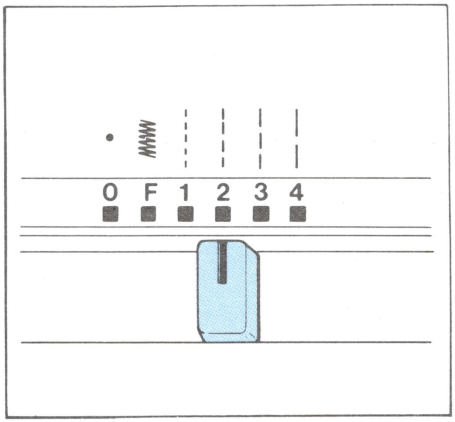

The stitch length is regulated by operating the stitch length knob.
Numerals above the knob represent the stitch length. THE HIGHER THE NUMBER, THE LONGER THE STITCH.
The "0" means that the material is not fed.
The "F" area is used for making a SATIN STITCH (a close zigzag stitch) and this stitch is used for making decorative patterns.
The dial position needed to obtain the satin stitch is varied according to the material and thread being used. To determine exact dial position, you must observe the feeding of the material.

STITCH WIDTH KNOB

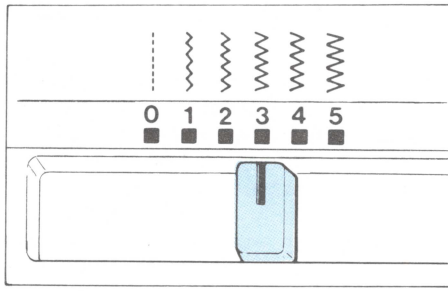

The zigzag width is regulated by operating the stitch width knob.

Numerals above the knob represent the width of stitch. THE HIGHER THE NUMBER, THE WIDER THE STITCH.

The "O" means straight stitch only.

NOTE: 1. Do not move the knob while the needle is in the material.
2. When using twin needle, knob should always be set at under "3".

REVERSE SEWING BUTTON

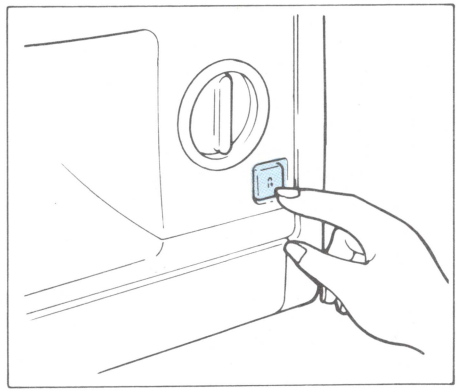

To sew in reverse, push sewing button as far as it will allow. Hold button in this position until you wish to sew forward. When button is released it will spring back in position and you will sew in forward direction.

Reverse sewing is used for back-tacking and reinforcement.

Presser Foot

You will find various kinds of presser feet for special use in the accessory box. According to your sewing needs, it is required to change the presser foot.

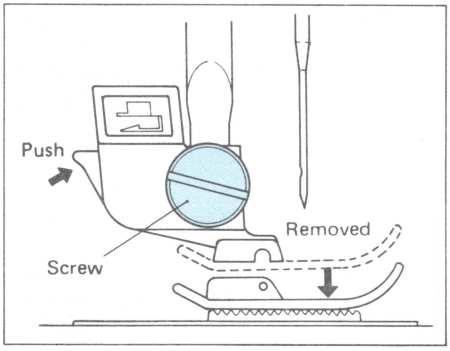

SNAP-ON TYPE

TO REMOVE THE FOOT

1. Raise needle to its highest position.
2. Raise presser foot.
3. Push the button, and presser foot is released easily.

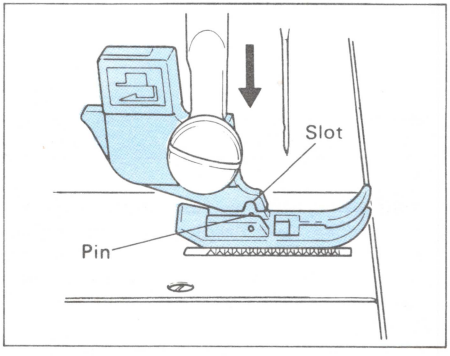

TO FIX PRESSER FOOT

1. Place the presser foot on the needle plate so that the pin of the presser foot is in line with shank slot.
2. Lower the presser foot lifter and the presser foot is fixed easily.

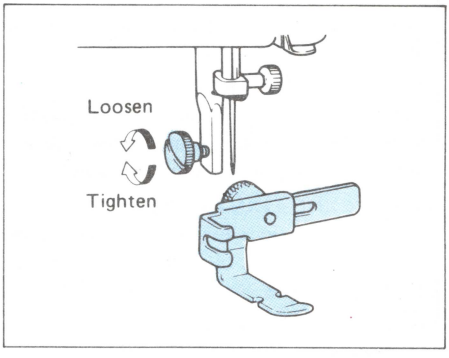

ORDINARY TYPE (ZIPPER FOOT)

1. Raise needle to its highest position.
2. Raise presser foot.
3. Loosen presser foot thumb screw and remove presser foot shank.
4. Place grooved side of zipper foot against the flat side of the presser bar.
5. Tighten the thumb screw.

Needle

HOW TO CHANGE THE NEEDLE

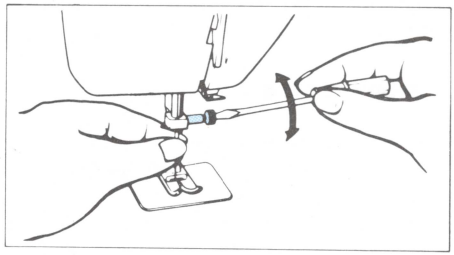

1. Raise needle to its highest posicion.
2. Loosen needle clamp screw and remove old needle.
3. Insert new needle into the needle clamp hole as far as it goes against the needle stop. Make sure the flat side of the needle faces toward the back and the long groove toward you.
4. Tighten the needle clamp screw securely.

HOW TO CHECK THE NEEDLE

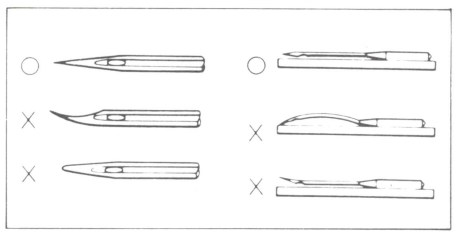

1. The sewing needle must always be straight and sharp for smooth sewing.
2. To check if needle is bent, place flat side of needle down as shown in illustration at left.

Twin Needle

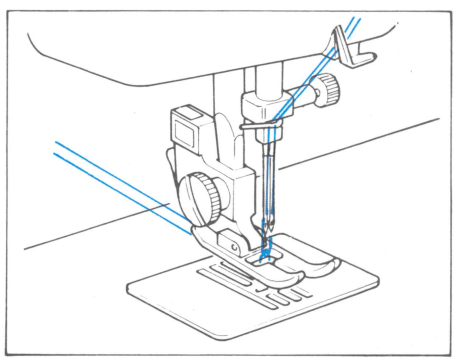

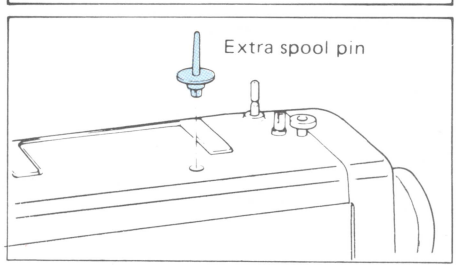

Your sewing machine is specially constructed for optional twin needle sewing by setting extra spool pin into hole on the top of machine. You can use either one or two colors of upper thread.

Make sure that two threads used to thread twin needle are of the same weight.
If thread is not of the same weight, stitching will be faulty.

INSERTING TWIN NEEDLE

Insert in the same manner as single needle. Flat side of needle should face toward back and long groove should face you.

THREADING TWIN NEEDLE

Follow instructions for single needle threading (see page 11), but thread each needle separately. The groove should face you.

NOTE FOR TWIN NEEDLE SEWING

1. Use ZIGZAG PRESSER FOOT.
2. Use stitch width knob at under "3".

Pressure Adjuster

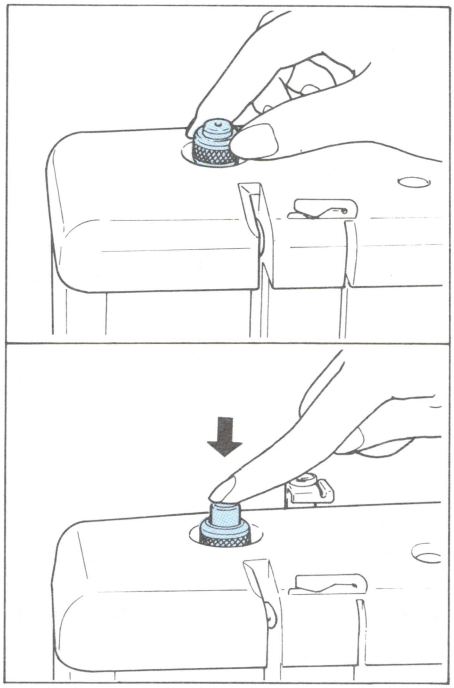

Correct pressure on presser foot is important to obtain smooth sewing. Pressure on presser foot requires to be regulated according to the type and thickness of the material to be sewn.

1. To regulate the pressure, lower presser foot.
2. Push outer ring of the pressure adjuster down, and inner pin will spring up to its highest position. In this position, pressure is completely released from the presser foot.
3. To increase pressure, push inner pin down with your finger.

Pressure Adjuster	Sewing Purpose	Pressure on Foot
UP	Darning Embroidering Monogramming	Free
MIDDLE	Mending Normal use and lighter material such as silk and nylon	Medium
DOWN	Thick and heavier materials	Heavy

Sew-light

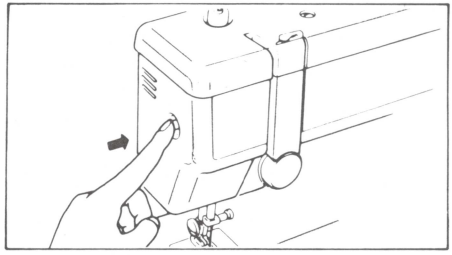

SEW LIGHT SWITCH BUTTON

To switch the light on or off, push the sew-light switch button.

HOW TO CHANGE THE LIGHT BULB

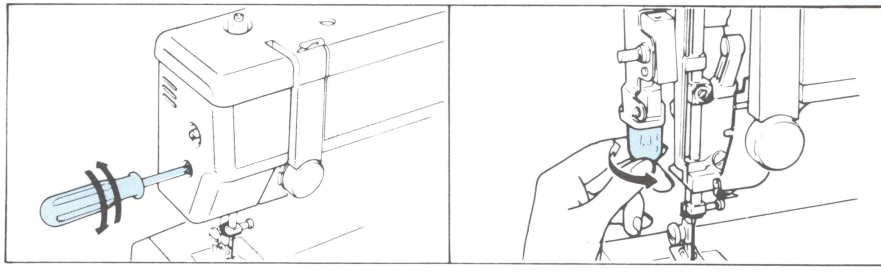

1. Remove face plate by loosening a screw on face plate.
2. Remove light bulb by turning it counterclockwise.
3. Replace light bulb and fix face plate.

NOTE: 1) Make sure to disconnect electric supply plug from wall outlet before changing light bulb.

2) Always use CORRECT LIGHT BULB.

MAXIMUM INPUT OF LAMP

12W. . . . .110/115V AREA

15W. . . . .220/240V AREA

Free-Arm Sewing

For sewing tubular and hard to reach garment areas, free-arm sewing is most convenient.

To make your machine a free-arm model, lift-up and slide out extension table.

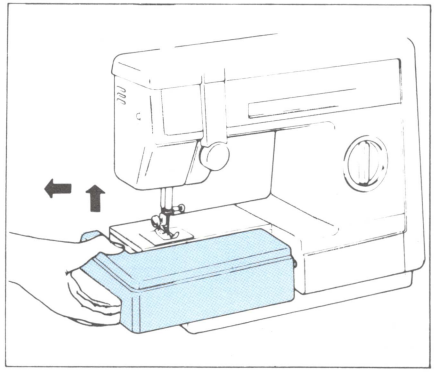

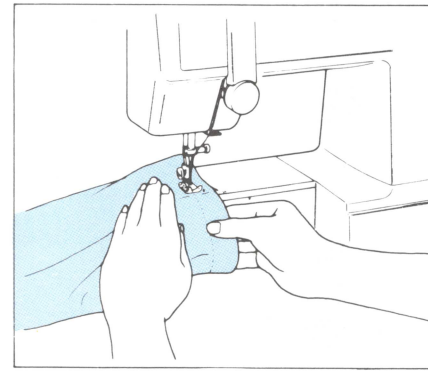

Upper (Needle) Thread

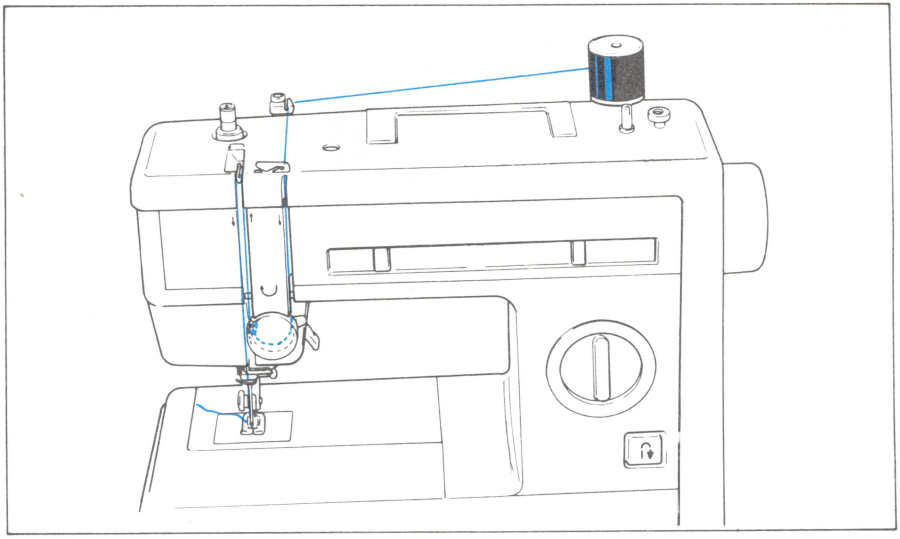

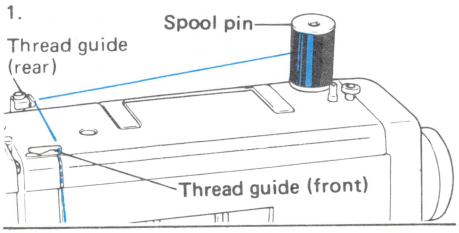

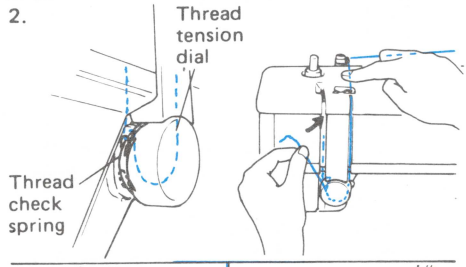

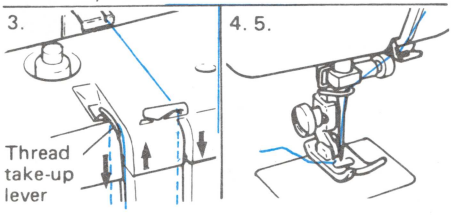

Before threading, raise presser foot and turn balance wheel toward you to raise thread take-up lever to its highest position.

Then raise spool pin and place thread spool on the pin.

1. Pass thread through the both of thread guides from rear to front.
2. Bring thread down and up through upper thread tension dial from right to left so that thread picks up the thread check spring. With holding thread as illustrated, *pull up thread and deliver into the eye in tension disc.*
3. Thread take-up lever by guiding thread to back of lever and around to your left. Bring thread through slit by pulling it toward you and into eyelet.
4. Bring down and pass through the thread guard and guides.
5. Thread needle from front to back and draw the thread out about 2 inches (5 cm).

NOTE:
IF THE THREADING ORDER IS NOT CORRECT, THREAD BREAKAGE, STITCH SKIPPING AND WRINKLING OF FABRIC WILL OCCUR.

Lower (Bobbin) Thread

HOW TO WIND BOBBIN

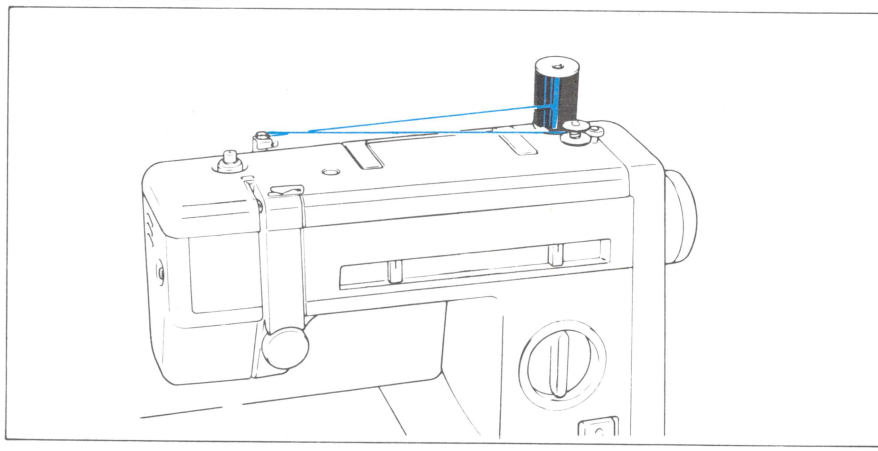

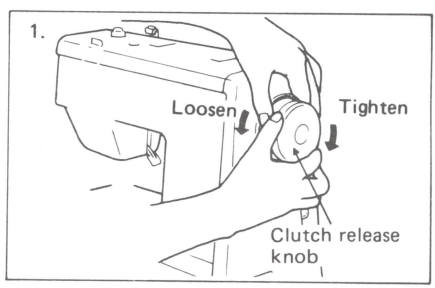

1. Loosen clutch release knob by turning it toward you.

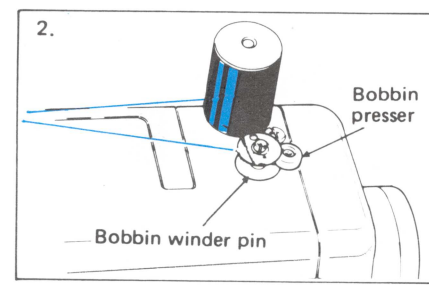

2. Place an empty bobbin on the bobbin winder pin.

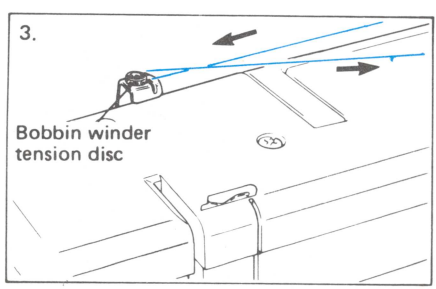

3. Place thread spool on the spool pin and take thread through bobbin winder tension disc.

4. Wind the thread a few times around the bobbin clockwise and push the bobbin toward bobbin presser. Start the machine gently.
5. Bobbin stops winding when full.
6. Push the bobbin to the left and remove it. Tighten clutch release knob securely.

HOW TO REMOVE AND INSERT BOBBIN CASE

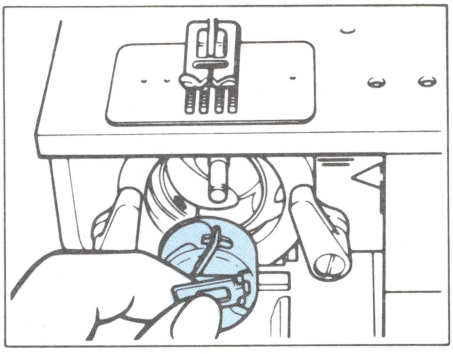

TO REMOVE BOBBIN CASE

1. Raise needle to its highest position.
2. Open the shuttle cover by turning it down.
3. Pull and open the latch of bobbin case.
4. Pull out bobbin case from the shuttle.

TO INSERT BOBBIN CASE

1. Raise needle to its highest position.
2. Holding bobbin case latch with metal finger of case pointing up, fit it into the notch at the top of shuttle race.
3. Push case back fully making sure the case is in the proper position and release the latch.

NOTE:

(A) Four inches (10 cm) of thread should be drawn out and left out of case.

(B) Latch of bobbin case should be open fully to prevent bobbin coming out of case.

(C) If bobbin case is not placed back in machine properly it will come out from the shuttle immediately after starting to sew.

HOW TO THREAD BOBBIN CASE

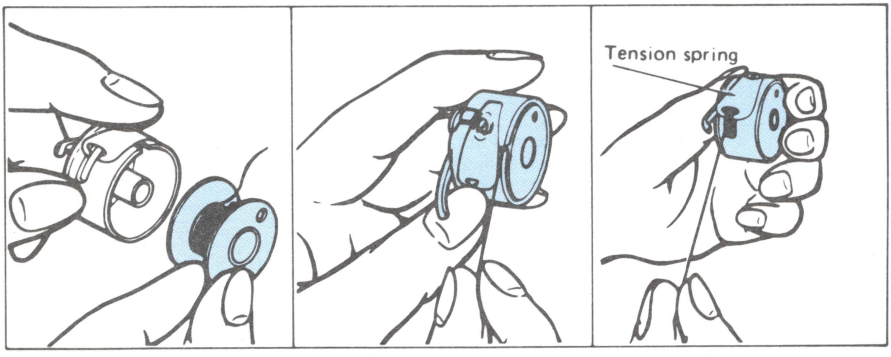

1. Unwind about 4 inches (10 cm) of thread from the bobbin. Insert wound bobbin into bobbin case.
2. Pull trailing thread into the slot of case.
3. Pull thread to the left under tension spring until thread enters into delivery eye.

HOW TO PULL UP LOWER THREAD

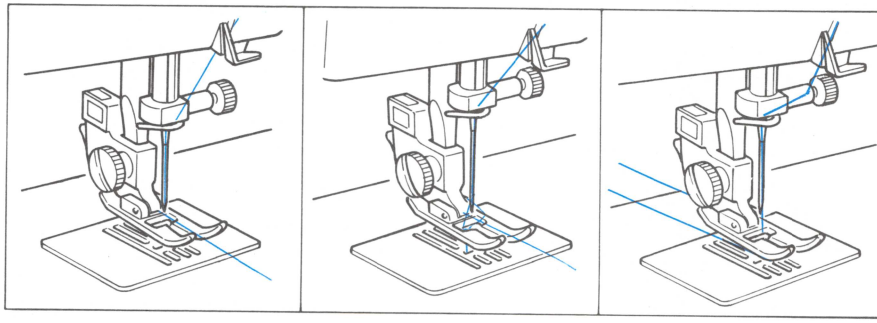

1. Raise needle and presser foot to the highest position. With left hand, hold the end of upper thread and with right hand, turn balance wheel toward you until the needle moves down and up again to its highest position.
2. Now upper thread catches the lower thread in a loop. Pull thread toward you so that lower thread will come up in a large loop from the presser foot.
3. Pull both threads under the toes of presser foot and place them to the rear leaving about 4 inches (10 cm).

Relative Chart of Sewing Material, Needle and Thread

SEWING MATERIALS		NEEDLE SIZES	THREAD SIZES
VERY THIN	Fine tricot, Fine lace, Thin linen, Silk, Tulle, Chiffon	9	Cotton: 80–120 Synthetic Fine Mercerized Cotton
LIGHTWEIGHT	Organdy, Jersey, Voile, Taffeta, Synthetics, Silk, Batiste	11	Cotton: 60–80 Silk: "A" Synthetic Mercerized 50
MEDIUM	Cotton, Gingham, Poplin, Percale, Pique, Satin, Velvet, Lightweight wool, Fine corduroy, Suitings	14	Cotton: 50–60 Silk: "A" Synthetic Mercerized 50–60
HEAVY	Denim, Gabardine, Tweed, Corduroy	16	Cotton: 40–50 Mercerized Heavy-Duty
VERY HEAVY	Canvas, Overcoating, Upholstery	18	Cotton: 30–40 Mercerized Heavy-Duty

NOTE: 1. Select correct size of needle and thread from above chart.
2. Use the same size thread for upper and lower threads.

Thread Tension

It is important that tension of upper and lower threads is equal to avoid puckering of material or other problems.
It is recommended that a test sample be made before sewing.

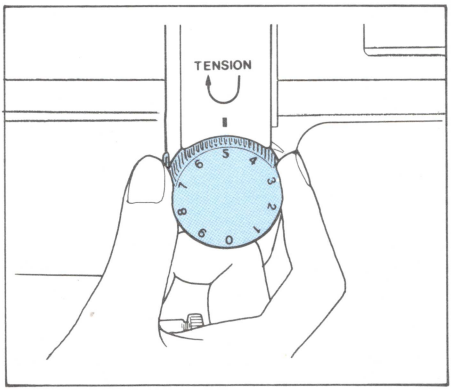

UPPER THREAD TENSION

To regulate upper thread tension, merely turn thread tension dial with your fingers after lowering the presser foot.

THE HIGHER THE NUMBER, THE TIGHTER THE TENSION.

To increase tension: Turn the dial to right to higher number.

To decrease tension: Turn the dial to left to lower number.

NOTE: When sewing the zigzag stitch, upper tension should be less than straight stitch sewing.

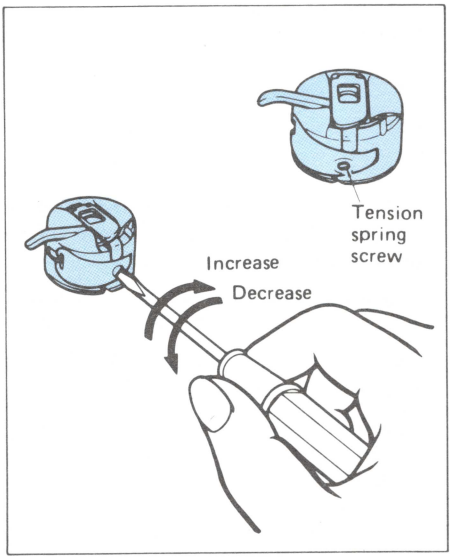

LOWER THREAD TENSION

Lower thread tension is adjusted for general use at the factory before shipment, but when sewing extremely thin or heavy material, it also requires adjusting the lower thread tension.

To regulate the lower thread tension, turn small screw on the tension spring of the bobbin case with the small screw driver.

To increase tension: Turn the small screw clockwise very slightly.

To decrease tension: Turn the screw counterclockwise very slightly.

PERFECT STITCHING

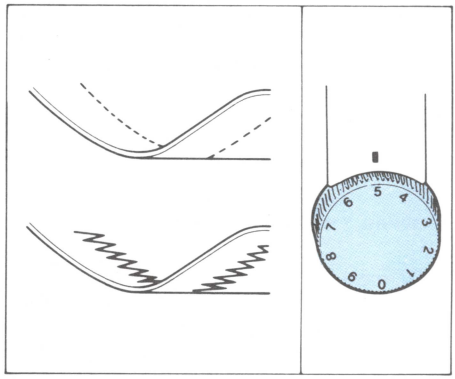

Tension of upper and lower threads should be equal, just sufficiently strong to lock both threads in material.

Perfect stitching appears flat on the material with no puckering of material.

INCORRECT STITCH (A)

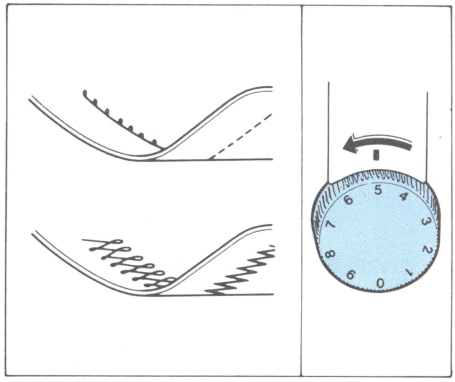

The upper thread lies on the surface of the material by pulling the lower thread up as shown.

This is caused by tight tension on the upper thread or loose tension on the lower thread.

To correct this, turn the upper thread tension dial to a lower number.

When perfect stitch cannot be obtained by only upper thread tension dial, adjust the bobbin tension accordingly.

INCORRECT STITCH (B)

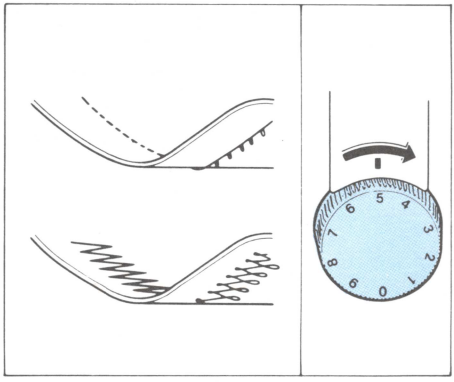

The lower thread lies on the under surface of the material by pulling upper thread down as shown.

This is caused by loose tension on the upper thread or tight tension on the lower thread.

To correct this, turn the upper thread tension dial to a higher number.

If perfect stitching cannot be obtained by changing upper thread tension, adjust the bobbin tension.

NOTE: It is recommended that test samples be made before sewing.

2 Straight Stitching

PATTERN SELECTOR	:	2
STITCH LENGTH	:	1 ~ 4
STITCH WIDTH	:	0
NEEDLE	:	Single
PRESSURE ADJUSTER	:	According to the Material

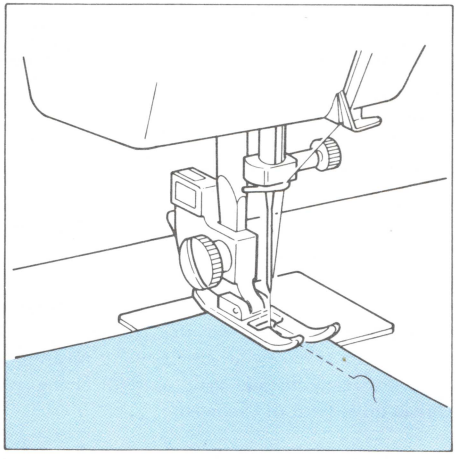

HOW TO START SEWING

1. Raise needle to its highest position and lift presser foot.
2. Pull up lower thread by turning the balance wheel toward you and place both upper and lower thread to the left.
3. Place material under presser foot and position needle 3/8 inch (10 mm) from material edge.
4. Lower presser foot.
5. For reverse sewing press Reverse Sewing Button as far as it allows. Reverse sewing is used where reinforcement is needed.
6. Release Reverse Sewing Button and start sewing in forward direction.

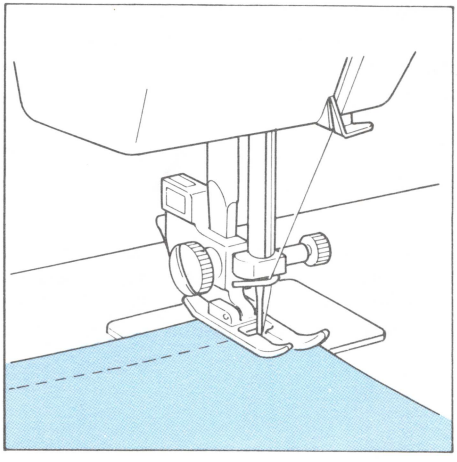

HOW TO CHANGE SEWING DIRECTION

1. Stop machine at the turning point while the needle is in the material.
2. Raise the presser foot and turn the material to the new direction while the needle acts as the axis.
3. Lower the presser foot and start sewing in new direction.

NOTE: In case of twin needle sewing, raise the needle at the turning point.

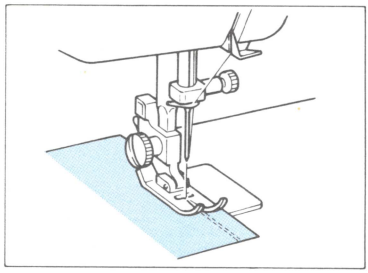

HOW TO FINISH YOUR SEWING PROJECT

(REVERSE STITCHING)

Reverse stitching is used to reinforce stitches near the edge of material or wherever reinforcement is needed.

1. This is done by stitching to the edge of material .... then stopping.
2. Press Reverse Sewing Button and stitch backwards for 3/8 inch (10 mm) from material edge.

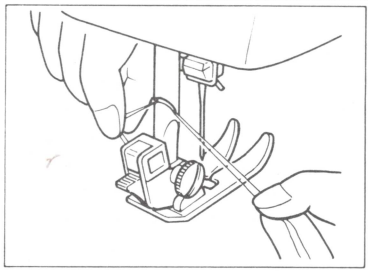

HOW TO REMOVE FINAL SEWING FROM MACHINE

1. Stop the machine.
2. Raise needle to its highest position and make sure that the thread take-up lever is also in the highest position.
3. Lift presser foot and pull out the material gently to the left side diagonally.
4. Cut both threads on the thread cutter.
5. Leave about 4 inches (10 cm) of threads between toes of the presser foot to the rear while the thread take-up lever is at the highest position, and you are ready to sew again without changing the thread pulled out of the needle.

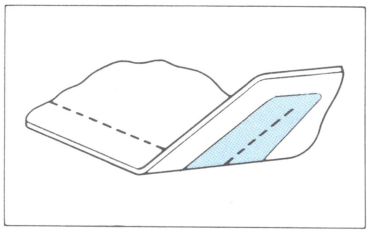

HOW TO SEW VERY THIN MATERIAL

An underlay of thin paper will help eliminate skipped stitches and puckering on very thin material.

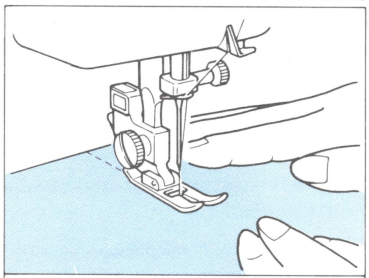

HOW TO GUIDE YOUR MATERIAL

Do not pull the material. Let the machine do the work. Merely guide the material with your fingers in front of the presser foot as shown in the illustration.

If you pull the material, your needle may either bend or break.

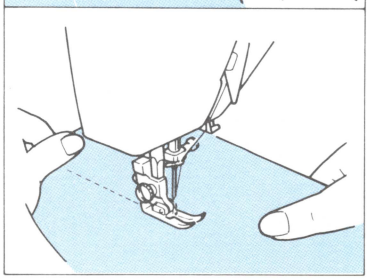

However, in case of special materials, such as tricot, crepes, knits, etc., we recommend that you support the material both in front and back of the presser foot with gentle tension as shown in the left illustration.

3 Zigzag Stitching

PATTERN SELECTOR	:	2
STITCH LENGTH	:	1~4 (For SATIN STITCH knob is set at F)
STITCH WIDTH	:	1~5 (Twin Needle sewing, always set at 3)
PRESSER FOOT	:	Zigzag
NEEDLE	:	Single or Twin Needle
PRESSURE ADJUSTER	:	According to the Material

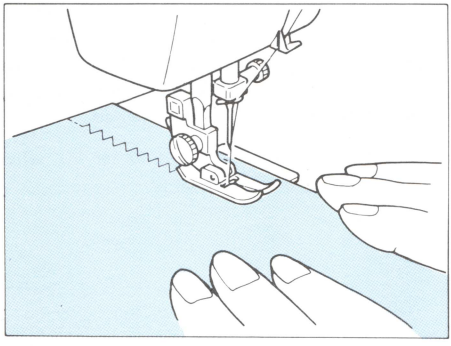

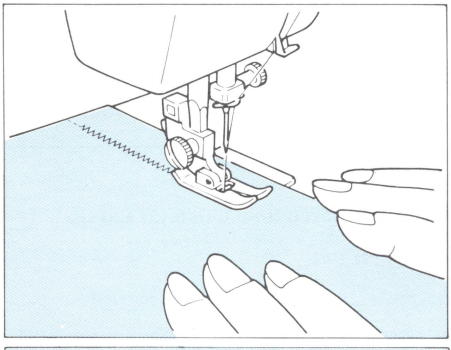

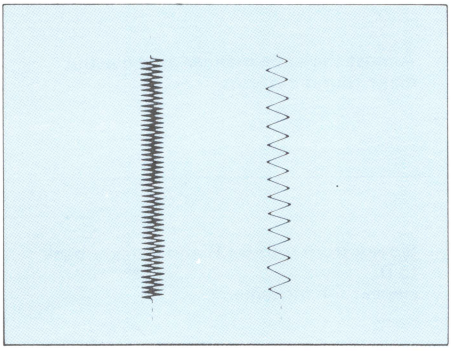

SIMPLE ZIGZAG STITCH

Set Stitch Length Knob between 1-4 for simple zigzag stitch.

1. With Stitch Length Knob Set at "F" position sew 5-6 straight stitches for reinforcement.
2. Set Stitch Width Knob your desired width and commence sewing.
3. Reset Stitch Width knob to "O" and set Stitch Length Knob at "F" position to reinforce stitches again before removing work from machine.

NOTE: Zigzag stitching requires less upper thread tension than straight stitching.

SATIN STITCH

When Stitch Length Knob is set at "F" it produces the "SATIN STITCH" which is used for making fine buttonholes or decorative stitches.

NOTE: It is recommended that a test sample be made before sewing.

Decorative Stitches

PATTERN SELECTOR	:	2
STITCH LENGTH	:	For SATIN STITCH set dial to between 0 ~ 1 (F)
STITCH WIDTH	:	See Instruction Below
PRESSER FOOT	:	Zigzag
NEEDLE	:	Single or Twin Needle
PRESSURE ADJUSTER	:	According to the material

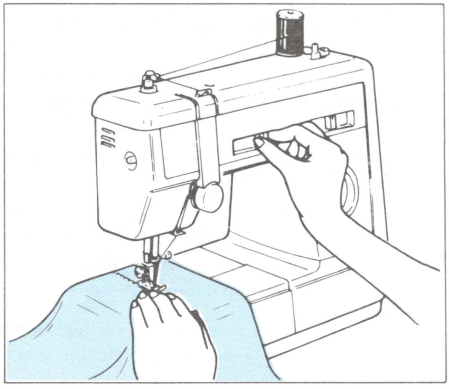

By using the "SATIN STITCH" as in the following instructions, various decorative stitches can be obtained.

NOTE: Set stitch width at under "3" when you use twin needle.

Needle	Patterns to be sewn	How to move stitch width
Single needle		At even speed from 0 to 5 (3) and from 5 (3) to 0. Repeat this.
Twin needle		
Single needle		Almost the same manner as above but make round patterns.
Twin needle		
Single needle		Slowly from 0 to 5 (3) and quickly back to 0. Repeat the movement.
Twin needle		

NOTE: Number in brackets represents twin needle sewing.

Triple Stretch Stitch

PATTERN SELECTOR	:	21 (Triple Stretch Stitch)
STITCH LENGTH	:	4
STITCH WIDTH	:	0
PRESSER FOOT	:	Zigzag
NEEDLE	:	Single
PRESSURE ADJUSTER	:	According to the Material

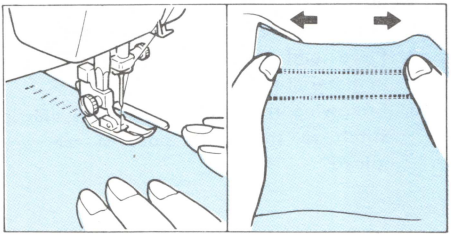

The "Triple Stretch Stitch" is used for any stretch material such as knitted fabric, tricot, etc.
This stitch is three times the strength of a regular stitch and gives elasticity to seams which prevents thread breakage.

NOTE: 1) As adjusting stitch width knob, you can get zigzag stitch.

Overedging

PATTERN SELECTOR	:	13 (Elastic Overlock Stitch), 14 (Slant Overlock Stitch), 17 (Reverse Slant Overedge Stitch)
STITCH LENGTH	:	4
STITCH WIDTH	:	3 ~ 5
PRESSER FOOT	:	Zigzag
NEEDLE	:	Single

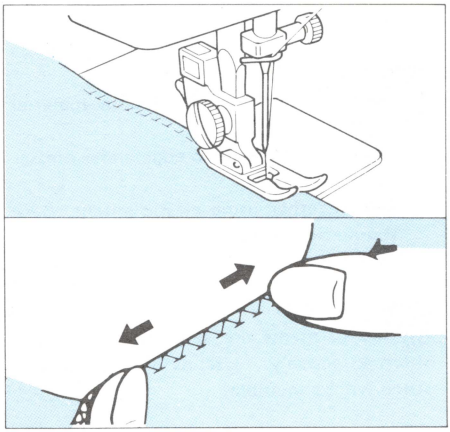

Place edge of material under presser foot so that left side of straight stitch and right side of zigzag stitch appears and sew in this position.

NOTE: When sewing elastic materials, Elastic Overlock Stitch is very useful as illustrated.

Elastic Stitch

PATTERN SELECTOR	:	3 (Elastic Stitch)
STITCH LENGTH	:	1 ~ 2
STITCH WIDTH	:	3 ~ 5
PRESSER FOOT	:	Zigzag
NEEDLE	:	Single
PRESSURE ADJUSTER	:	According to the Material

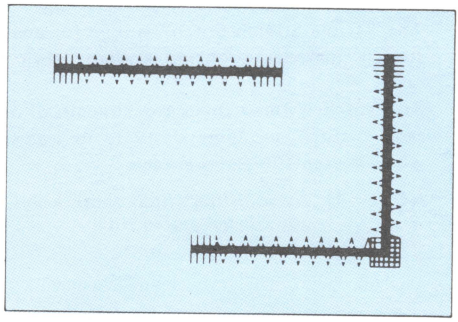

MENDING

1. Set stitch length knob between F-1.
2. Place reinforcement material under tear in material to be repaired.
3. Following the line of tear, sew elastic stitch so that both sides of tear are joined.

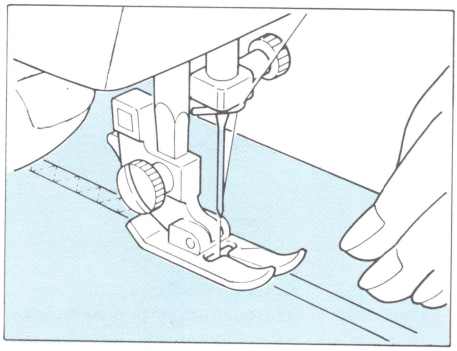

SEWING ELASTIC

1. Place the elastic on the material.
2. As you sew, stretch elastic both in front and in back of presser foot as shown in illustration.

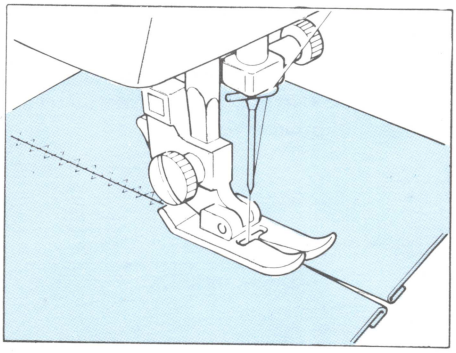

JOINING STITCH

1. Elastic stitch is used to join material together.
2. Place material edge to edge under presser foot.
3. Sew together using elastic stitch. Care should be taken to keep the two material edges close together.

SEWING KNITS

Knitted garments are sewn by this elastic stitch effectively. Use nylon thread, and stitch will be invisible.

Blind Stitch

PATTERN SELECTOR	:	5 (Blind Stitch), 6 (German Blind Stitch)
STITCH LENGTH	:	1 ~ 2
STITCH WIDTH	:	3 ~ 5
PRESSER FOOT	:	Zigzag
NEEDLE	:	Single
PRESSURE ADJUSTER	:	According to the Material

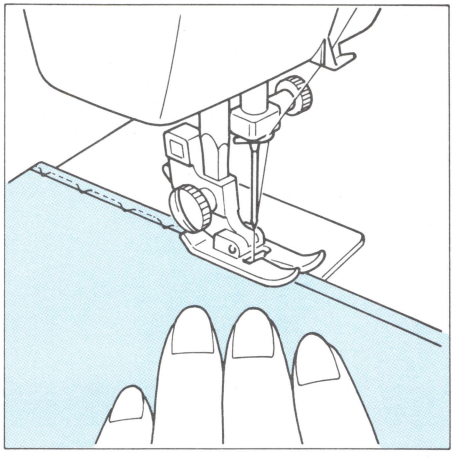

1. Thread used should be the same color as material used.
2. Fold material to size of hem desired and then fold back as shown in Figure A leaving 1/5 inch (5 mm) overlap at edge.
3. Sew on fold as in Figure B.
4. When material is unfolded you will have a blind stitched hem as in Figure C.

NOTE: The "German blind stitch" is very useful for stretch materials.

Fig. A

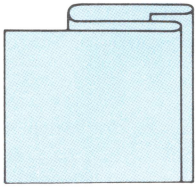

Fig. B

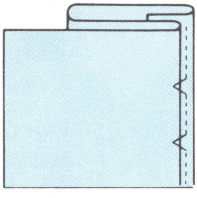

Fig. C

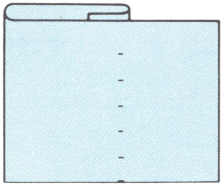

Shell Tack

PATTERN SELECTOR	:	7 (Shell Tack)
STITCH LENGTH	:	2 ~ 4
STITCH WIDTH	:	3 ~ 5
PRESSER FOOT	:	Zigzag
NEEDLE	:	Single
PRESSURE ADJUSTER	:	According to the Material

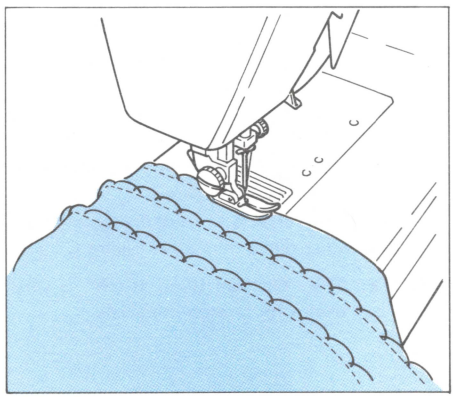

This stitch can be used for sewing a picoted edge on a light material.

1. Sew material on bias, placing material under the presser foot so that straight stitches are sewn on seam line and zigzag stitches are sewn slightly over seam edge.
2. This work requires a little tighter upper thread tension than normal.
3. Sew at slow speed.
4. Edge of material will be picoted.

Scallop Stitch

PATTERN SELECTOR	:	9 (Scallop Stitch)
STITCH LENGTH	:	F ~ 1
STITCH WIDTH	:	3 ~ 5
PRESSER FOOT	:	Zigzag
NEEDLE	:	Single or Twin Needle
PRESSURE ADJUSTER	:	According to the Materials

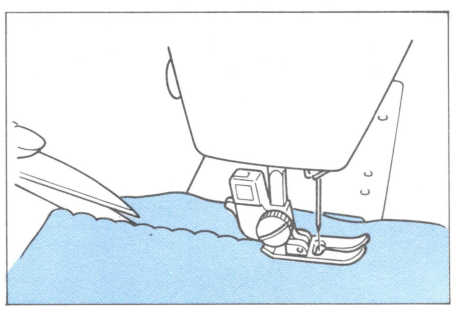

This machine produces decorative stitch (Scallop) automatically.

The "Scallop Stitch" may be used as a decorative edging.

1. Sew scallop stitch along edge of material.
2. If desired, trim around scallop with scissors to create a scallop edge.

NOTE: If twin needle sewing is used, set zigzag width dial at under "3".

Decorative Stitches

1. Smocking

PATTERN SELECTOR	:	8 (Lighting Stitch), 12 (Link Stitch), 20 (Feather Stitch)
STITCH LENGTH	:	F ~ 1 (8), 4 (12, 20)
STITCH WIDTH	:	5 (8), 3 ~ 5 (12, 20)
PRESSER FOOT	:	Zigzag
NEEDLE	:	Single or Twin
PRESSURE ADJUSTER	:	According to the Material

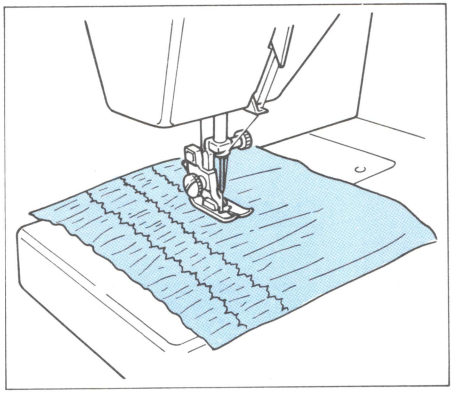

This stitch is ideal for smocking and it is useful for mending, overcasting and attaching elastic, stretch lace and blanket binding. Use this versatile stitch to create decorative designs on fabrics that stretch.

NOTE: If twin needle sewing is used, set zigzag width dial at under "3".

2. Decorative Stitching

PATTERN SELECTOR	:	15 (Comb Stitch), 16 (Arrowhead Stitch)
STITCH LENGTH	:	4
STITCH WIDTH	:	3 ~ 5
PRESSER FOOT	:	Zigzag
NEEDLE	:	Single or Twin
PRESSURE ADJUSTER	:	According to the Material

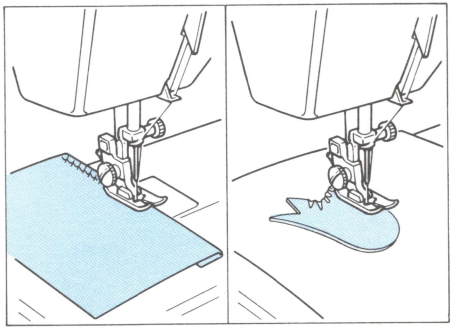

These two stitches are designed for decorative use. Also these stitches are very suitable for blanket stitch.

NOTE: If twin needle sewing is used, set zigzag width dial at under "3".

3. Fancy Stitching

PATTERN SELECTOR	:	10 (Swan Stitch), 11 (Tulip Stitch)
STITCH LENGTH	:	4
STITCH WIDTH	:	5
PRESSER FOOT	:	Zigzag
NEEDLE	:	Single
PRESSURE ADJUSTER	:	According to the Material

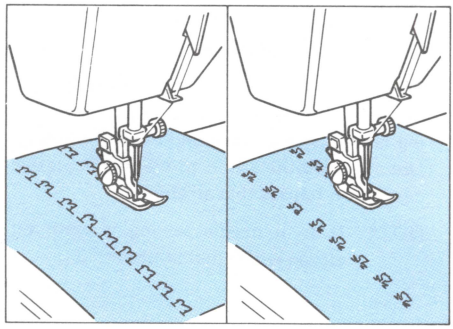

Enjoy fancy stitches.

Fagoting

PATTERN SELECTOR	:	19 (Fagoting Stitch)
STITCH LENGTH	:	4
STITCH WIDTH	:	3 ~ 5
PRESSER FOOT	:	Zigzag
NEEDLE	:	Single
PRESSURE ADJUSTER	:	According to the Material

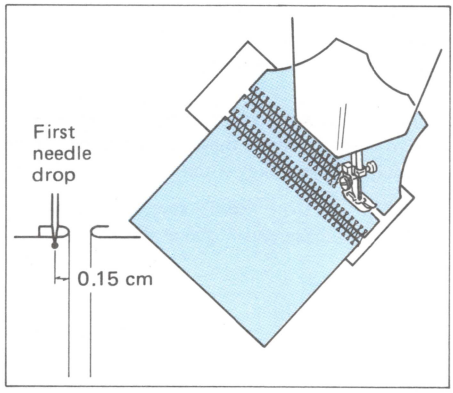

1. Basting
   Apply thin paper to back fabric and baste both together.
2. Stitch along the edge
   Pull both threads slightly when starting.
   * Set zigzag width at maximum.
   * Use thicker threads.
3. After sewing
   1) Remove the basting and the paper.
   2) Tie knots at the beginning and end of the seams on the reverse side.

Patch Work

PATTERN SELECTOR	:	4 (Double Action Stitch), 18 (Leaf Stitch)
STITCH LENGTH	:	1 ~ 2 (4), 4 (18)
STITCH WIDTH	:	3 ~ 5
PRESSER FOOT	:	Zigzag
NEEDLE	:	Single
PRESSURE ADJUSTER	:	According to the Material

PATCH WORK

1. Join two pieces as per illustration.
2. Stitch the folded trims.

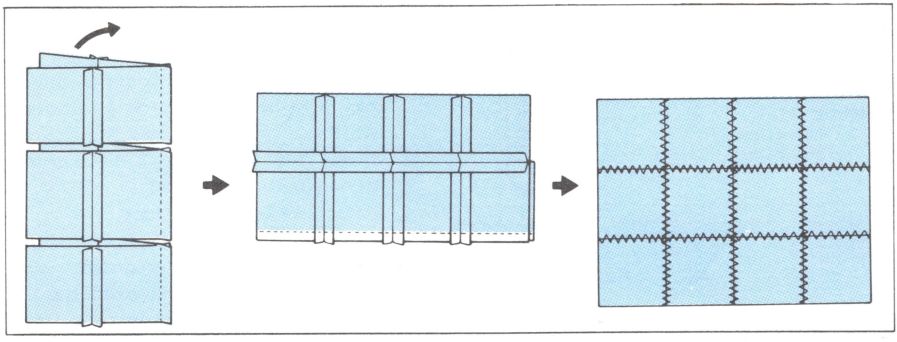

6 Buttonholes and Button Sewing

Buttonholes

PATTERN SELECTOR	:	1
STITCH LENGTH	:	F (Fine) ~ 2 (Coarse)
STITCH WIDTH	:	3 ~ 5
PRESSER FOOT	:	Buttonhole Foot
NEEDLE	:	Single
PRESSURE ADJUSTER	:	According to the Material

One-step automatic Buttonholing is a simple process that provides reliable results.

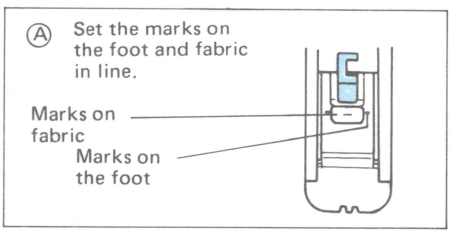

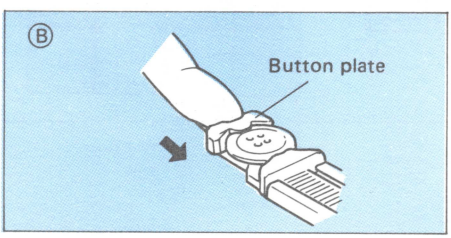

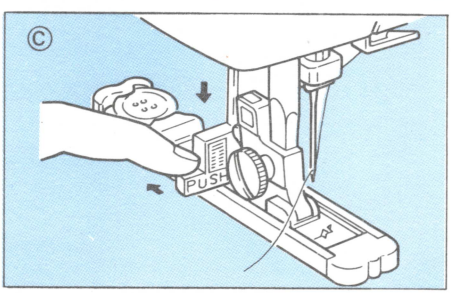

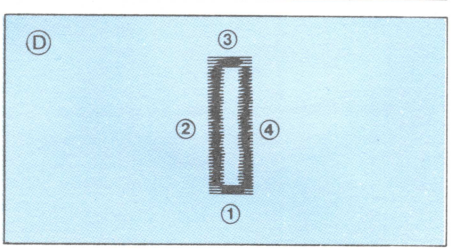

MAKING BUTTONHOLE

1. Use buttonhole foot with sliding portion.
2. Choose the best stitch width (width of bar tack) between 3 to 5 to suit your work.
3. Using tailor chalk, mark the position of button to be attached.
4. Attach the buttonhole foot.
5. Draw up lower thread.
6. Lower presser foot in accordance with the marked line as per illustration Ⓐ.
7. Draw button plate out and insert the button as per illustration Ⓑ.
8. Pull out **buttonhole lever** and push this lever back slightly as per illustration Ⓒ.
9. Holding the upper thread slightly, start the machine.
10. Buttonhole stitching is made in order of 1–4 as per illustration Ⓓ.
    Stop the machine when bar tack is reached.

Note: 1 The maximum capability is 3 cm (1-1/6 inch) which is the diameter of button plus thickness of fabrics.
2 You can make several buttonholes of the exact same size.

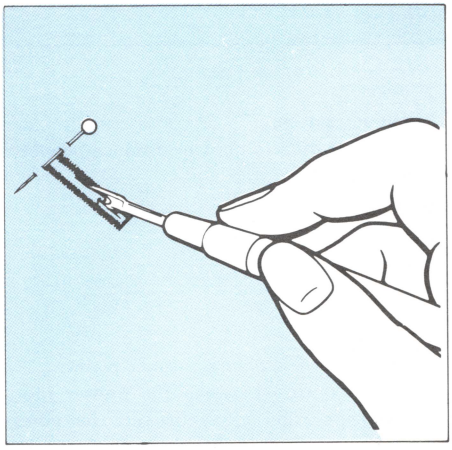

HOW TO SECURE STITCHING AND CUT MATERIAL FOR BUTTONHOLE.

1. To secure stitching, turn the material 90 degrees counter-clockwise and sew 5-6 straight stitches.
2. Remove from machine. Cut opening in buttonhole with seam ripper tool, taking care not to cut through any stitching.
3. It is recommended that pins are placed across both ends of buttonhole as protection against cutting bar tack stitching.

INFORMATION FOR SELECTING STITCH LENGTH

Depending on the type of fabric and thread you use, select any adequate stitch length position between 0-2.

"F" area is usually for normal type of material and "1-2" area is for elastic/stretchable materials.

Poiat "0" is no feeding of material.

Before making buttonholes on project, suggest you make test buttonboles and find out the most suitable positions of Stitch Length, Stitch Width, and Pressure Adjuster.

Button Sewing

PATTERN SELECTOR	:	2
STITCH LENGTH	:	Set at any setting.
STITCH WIDTH	:	This dial is used to control distance between holes in button.
PRESSER FOOT	:	Button Sewing Foot
NEEDLE	:	Single
OTHERS	:	Darning Plate
PRESSURE ADJUSTER	:	Middle

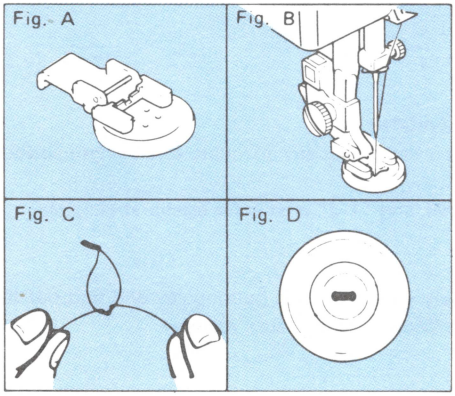

1. Place darning plate on needle plate.
2. Place button between the presser foot and the material, making sure that holes of button fall in line with the base line of button sewing foot.
3. Set stitch width control to regulate distance of stitch between the holes in the button. Lower presser foot and check to see that needle enters holes in button properly.
4. At slow speed sew approximately 10 stitches.
5. Remove from machine. Cut upper and lower threads and with normal sewing needle sew threads through to back of button and tie.

BUTTON FITTING WITH THREAD SHANK

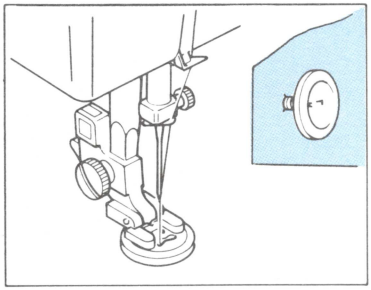

For heavier material use the following method to sew on buttons:

1. Place a needle on the button as shown in illustration and then sew on button as you would regularly (see above).
2. When removing work from machine leave a long upper thread to be used to form a thread shank.
3. Pull the upper thread through hole of button, between button and material, to form thread shank. Wind this thread around stitching which will make button very secure.
4. With normal sewing needle sew in thread ends.

Zipper Insertion

PATTERN SELECTOR	:	2
STITCH LENGTH	:	2 ~ 3
STITCH WIDTH	:	0
PRESSER FOOT	:	Zipper Foot
NEEDLE	:	Single
PRESSURE ADJUSTER	:	According to the Materials

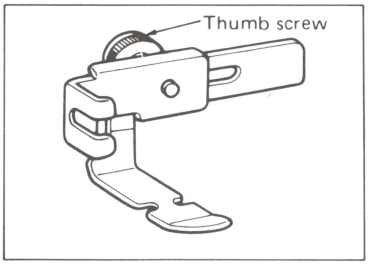

Zipper foot is used to sew various types of zippers and can easily be positioned to right or left side of needle. When zipper is sewn at right side of needle, position zipper foot by loosening thumb screw and sliding zipper foot to the left.

When the zipper is sewn at left side of needle, position zipper foot by loosening thumb screw and sliding zipper foot to the right.

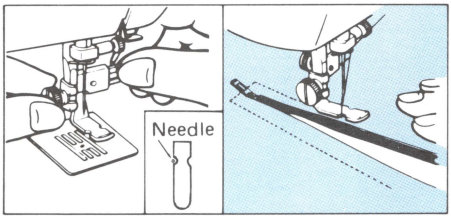

1. Lower needle into side notch located on presser foot (right or left).
2. Tighten thumb screw to lock presser foot into position.
3. Fold edge of material 3/4 inch (2 cm.) and place zipper under folded portion.
4. By guiding zipper foot along the zipper teeth you will stitch close to edge of zipper in correct position.
5. To sew opposite side of zipper loosen thumb screw and position zipper foot (right or left).

Darning

PATTERN SELECTOR	:	2
STITCH LENGTH	:	Set any position
STITCH WIDTH	:	0
NEEDLE	:	Single
PRESSURE ADJUSTER	:	Up (Free)
OTHERS	:	Darning Plate

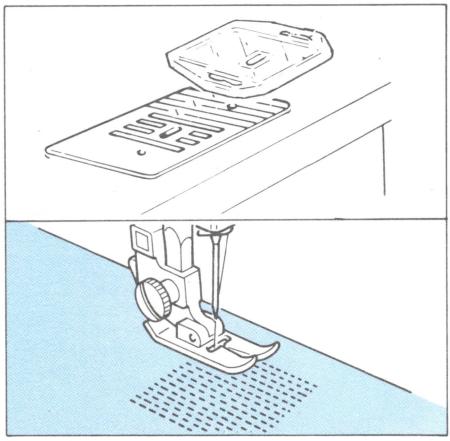

1. Set Darning Plate on the needle plate as illustrated.
2. Place portion to be darned under the presser foot together with underlay.
3. Lower presser foot.
4. Sew alternately drawing the work gently away from you and pulling it toward you.
5. Repeat this motion until the portion to be darned is filled with parallel lines of stitching.

8 Various Other Stitches

Gathering

PATTERN SELECTOR	:	2
STITCH LENGTH	:	4
STITCH WIDTH	:	0
NEEDLE	:	Single
PRESSURE ADJUSTER	:	According to the Material

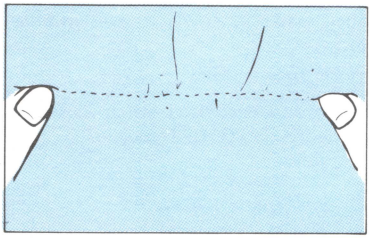

1. Loosen upper thread tension (set dial at about '2') so that lower thread lies on the under side of material.
2. Sew a single row or multiple rows of straight stitching.
3. Pull lower thread(s) to gather up material.

Applique

PATTERN SELECTOR	:	2
STITCH LENGTH	:	F ~ 2
STITCH WIDTH	:	1 ~ 3
NEEDLE	:	Single
PRESSURE ADJUSTER	:	Middle

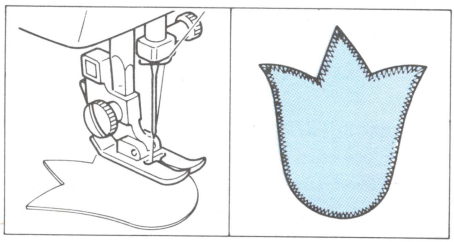

1. Baste cut design to the material.
2. Sew carefully following design.
3. Cut away surplus material outside of stitching.
4. Remove basting.

NOTE: Make reinforcement straight stitch at beginning and ending stitches.

Attaching Lace

PATTERN SELECTOR	:	2
STITCH LENGTH	:	2 ~ 4
STITCH WIDTH	:	0
PRESSER FOOT	:	Zigzag
NEEDLE	:	Single
PRESSURE ADJUSTER	:	According to the Material

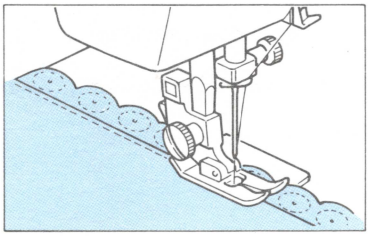

1. Place lace under material letting it overlap edge 1/4 inch (5 mm).
2. Place under presser foot and sew.

NOTE: If satin stitch or a decorative stitch is used to sew lace, it will be most decorative.

Cording

PATTERN SELECTOR	:	2
STITCH LENGTH	:	F ~ 2
STITCH WIDTH	:	In accordance with thickness of cord being used, set stitch width.
PRESSER FOOT	:	Zigzag
NEEDLE	:	Single
PRESSURE ADJUSTER	:	Middle

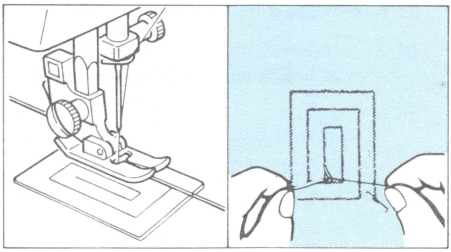

1. Set Stitch Width Knob.
2. Place cord on fabric to be sewn.
3. Lower presser foot making sure cord is centered and sew using zigzag stitch. Guide cord by hand to where you desire it.

Monogramming and Embroidering, Using Embroidery Hoop

PATTERN SELECTOR	:	2
STITCH LENGTH	:	Set at any position.
STITCH WIDTH	:	0 ~ 5
PRESSER FOOT	:	Removed
NEEDLE	:	Single
OTHERS	:	Darning plate
PRESSURE ADJUSTER	:	Up (Free)

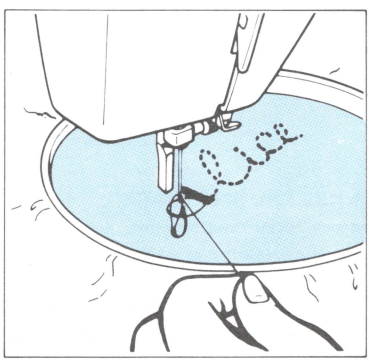

PREPARATION FOR MONOGRAMMING AND EMBROIDERING

1. Place darning plate on needle plate.
2. Set your sewing machine as per above instructions.
3. Draw lettering (for monogramming) or design (for embroidering) on the right side of the material.
4. Stretch work between embroidery hoops as firmly as possible.
5. Place the work under the needle and lower presser bar.
6. Pull lower thread up through the work as starting position by turning balance wheel and make a few holding stitches.
7. Hold the hoop with thumb and forefingers of both hands while pressing the material with middle and third fingers and supporting the outside of hoop with smaller finger.

MONOGRAMMING

1. Sew, moving hoop slowly along the lettering at an even rate of speed.
2. Secure with a few straight stitches.

(NOTE: These instructions also apply to embroidering)

EMBROIDERING

1. Stitch outline of design by moving embroidery hoop accordingly.
2. Fill in design stitch from outline of design to inside and from inside to edge of outline alternately until design is completely filled in. Keep stitching close together.

NOTE: A long stitch is made by moving embroidery hoop rapidly and a short stitch is made by moving it slowly.

Cleaning

The sliding parts of the shuttle race should be cleaned regularly so that lint does not accumulate.

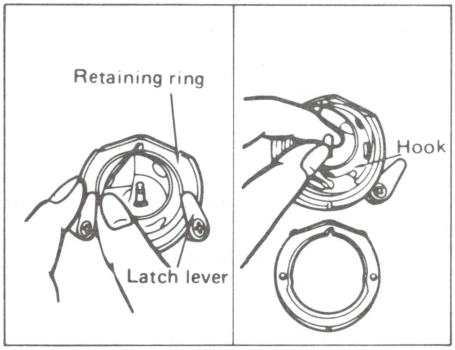

HOW TO REMOVE THE SHUTTLE HOOK

1. Raise needle to its highest position.
2. Open shuttle cover.
3. Take out bobbin case.
4. Push latch levers outside and remove retaining ring.
5. Remove hook by grasping center post of hook.

NOTE: When needle is lowered, shuttle hook cannot be removed.

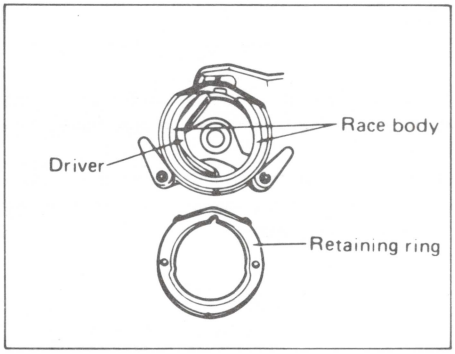

CLEANING SHUTTLE RACE

1. Remove accumulated lint and thread from the retaining ring, hook, driver and race body with brush.
2. A cloth dampened with machine oil should be used to wipe shuttle race clean.
3. Clean shuttle hook in same manner as above.
4. Reassemble.

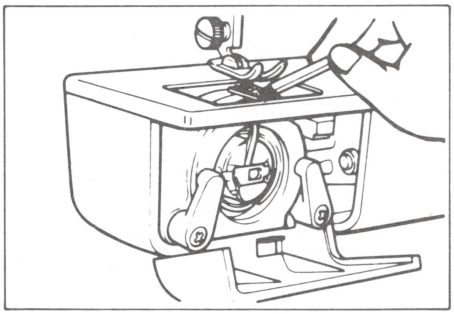

CLEANING FEED DOG

1. Take out needle plate.
2. Clean upper part of feed dog and shuttle race body with brush.

How to Oil Sewing Machine

A new sewing machine or the one that has not been in use for a long period of time should be oiled as per diagram below and in the next page.

OIL 1 to 2 DROPS TO THE POINTS MARKED

OIL 3 to 4 DROPS TO THE POINTS MARKED

OIL ONCE A WEEK IF MACHINE IS USED MORE THAN ONE HOUR PER DAY. IF MACHINE IS USED MORE OFTEN OIL EVERY DAY.

After oiling, remove thread and with presser foot up, run machine fast. Be sure to wipe off any excess oil.

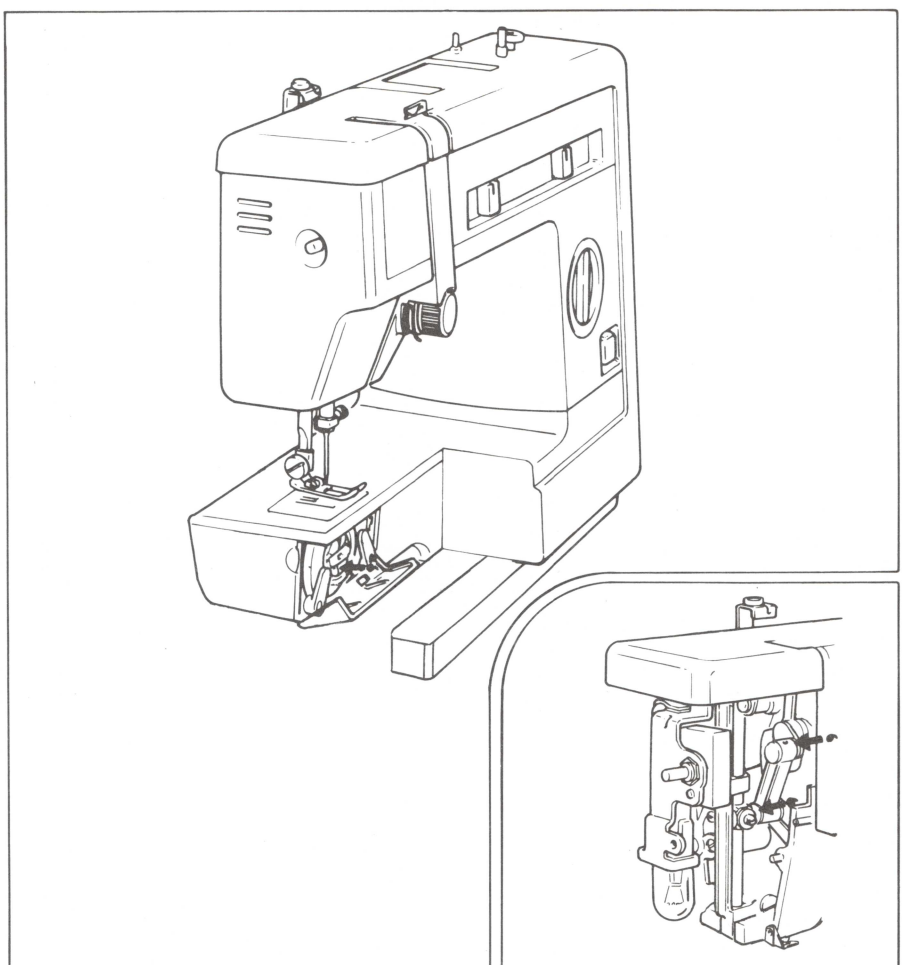

Occasionally, remove the top cover by loosening two screws on side cover and top cover and apply machine oil to oiling points as illustrated.

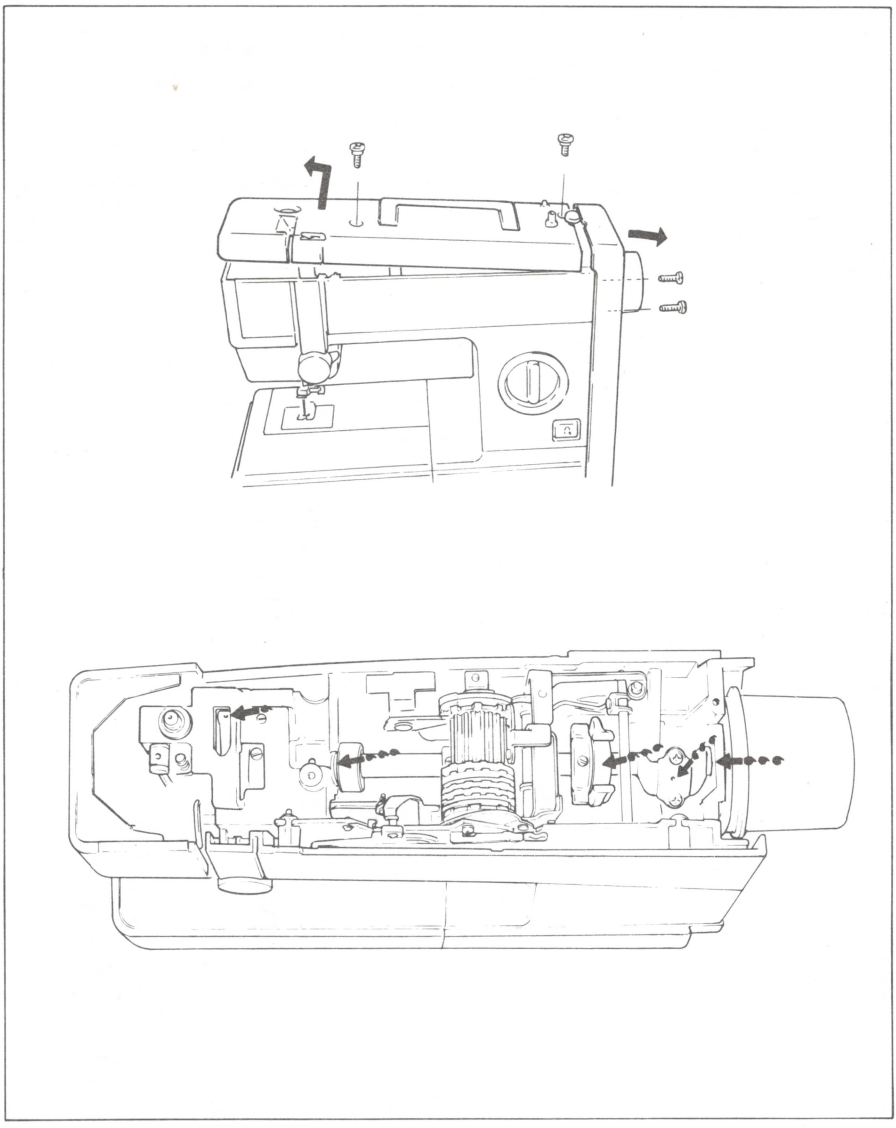

NOTE: If machine has not been used for a long period of time, oil tends to coagulate and operation of machine will not be smooth. Apply a few drops of oil to oiling points, and with presser foot up run machine for a few minutes. Then wipe up any excess oil.

Check List for Better Sewing

Check this list if you are having the following problems:

IF MATERIAL DOES NOT FEED

1. Darning plate is on needle plate.
2. Needle plate is out of position.
3. Clutch release knob is loose.
4. Stitch length regulator is at 0.

IF NEEDLE BREAKS

1. Needle is inserted incorrectly.
2. Needle clamp screw is loose.
3. Bent needle is used.
4. Upper threading is not correct.
5. Upper thread tension is too tight.
6. Wrong needle and thread for cloth being sewn are used.
7. Material pulled excessively.

IF LOOPS FORM ON FABRIC

1. Tension of upper or lower thread is wrong.

IF MATERIAL SHOULD PUCKER

1. Thread tension is too tight.
2. Threading is not correct.
3. Thread is caught by something.
4. Lower thread is unevenly wound on bobbin.

IF UPPER THREAD BREAKS

1. Upper threading is not correct.
2. Needle eye is not sharp.
3. Upper thread is too large for needle eye.
4. Upper thread tension is too tight.
5. Needle is inserted incorrectly.

IF LOWER THREAD BREAKS

1. Lower thread is entangled in shuttle.
2. Lower thread tension is too tight.
3. Lower threading is not correct.

IF MACHINE SKIPS STITCHES

1. Needle is not sharp and straight.
2. Needle is inserted incorrectly.
3. Wrong needle and thread for cloth being sewn are used.
4. Upper threading is not correct.
5. Lint is clinging to under-side of needle plate.

IF MACHINE RUNS HEAVY OR NOISY

1. Machine is out of oil.
2. Lints has accumulated on shuttle and teeth of feed dog.

Repacking the Machine

Keep the carton and packing material for future use in the event it becomes necessary to reship the sewing machine.
(Improper packing or improper packing material could result in damage during shipping.)
Instructions for repacking the machine are illustrated below.

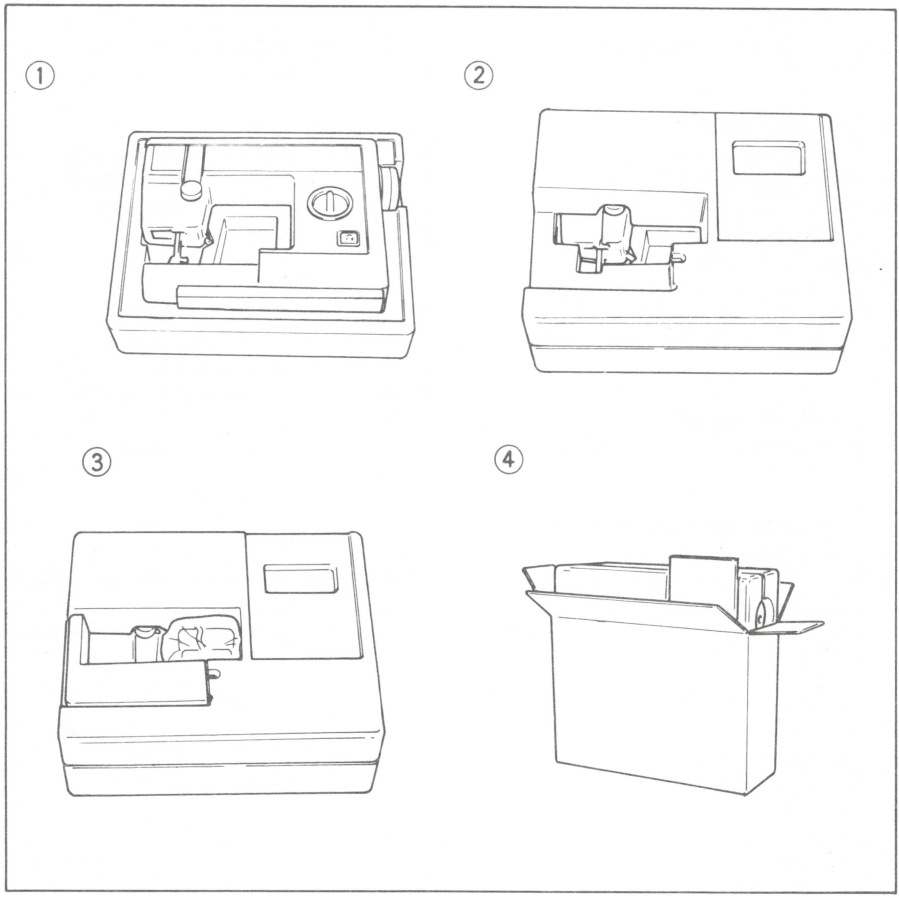

INDEX

	Page
Accessories	4
Applique	33
Attaching lace	34
Blind stitch	23
Button sewing	30
Buttonholes	28
Check list for better sewing	39
Cleaning	36
Connecting plugs	3
Controlling sewing speed	3
Cording	34
Darning	32
Decorative stitches	20,25
Elastic stitch	22
Fagoting	26
Free-arm	10
Gathering	33
Lower (Bobbin) thread	12
Mending	22
Monogramming and Embroidering	35
Needle	8
Oiling	37
Overedging	21
Patch work	27
Pattern selector knob	5
Presser foot	7
Pressure adjuster	9
Principal parts	2
Relative chart of sewing material, needle & thread	14
Repacking the machine	40
Reverse sewing button	6
Satin stitch	19
Scallop stitch	24
Sew-light	10
Shell tack	24
Stitch length knob	5
Stitch width knob	6
Straight stitching	17
Thread tension	15
Triple stretch stitch	21
Twin needle	8
Upper (Needle) thread	11
Zigzag stitching	19
Zipper insertion	31

(89/8)

MODEL VX920/
USA VX2080

194800-014