PARTS BOOK

FOR

brother® Overlock Sewing Machine

MODEL 640D/PL-1050

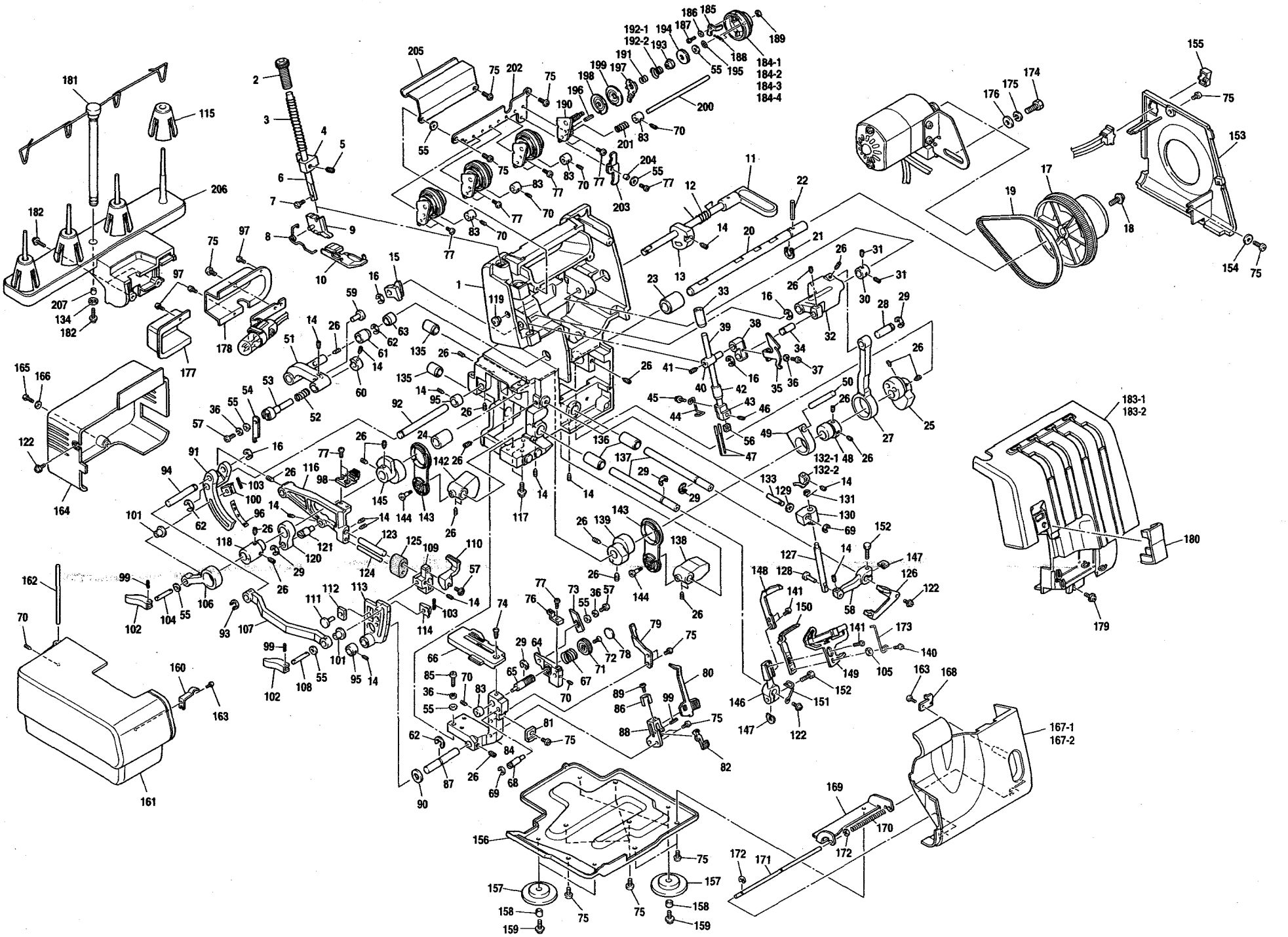
1
2
3
4
5
6
7
8
9
10
11
12
13
14
15
16
17
18
19
20
21
22
23
24
25
26
27
28
29
30
31
32
33
34
35
36
37
38
39
40
41
42
43
44
45
46
47
48
49
50
51
52
53
54
55
56
57
58
59
60
61
62
63
64
65
66
67
68
69
70
71
72
73
74
75
76
77
78
79
80
81
82
83
84
85
86
87
88
89
90
91
92
93
94
95
96
97
98
99
100
101
102
103
104
105
106
107
108
109
110
111
112
113
114
115
116
117
118
119
120
121
122
123
124
125
126
127
128
129
130
131
132-1
132-2
133
135
136
137
138
139
140
141
142
143
144
145
146
147
148
149
150
151
152
153
154
155
156
157
158
159
160
161
162
163
164
165
166
167-1
167-2
168
169
170
171
172
173
174
175
176
177
178
179
180
181
182
183-1
183-2
184-1
184-2
184-3
184-4
185
186
187
188
189
190
191
192-1
192-2
193
194
195
196
197
198
199
200
201
202
203
204
205
206
207
134

Ref. No.	Parts No.	Parts Name
1	X77040-001	Machine body
2	142860-001	Presser adjusting screw
3	126662-001	Presser bar spring
4	127198-000	Presser bar guide bracket
5	100058-003	Set screw
6	126660-001	Presser bar
7	126851-001	Set screw
8	X76602-001	Presser foot spring
9	X76600-001	Presser holder assembly
10	X76606-001	Presser foot assembly
11	138877-006	Presser bar lifter
12	X77096-001	Spring
13	X77179-000	Tension release cam
14	014400-422	Set screw
15	138879-000	Presser lifter cam
16	048050-346	Stop ring
17	127830-005	Timing pulley
18	X76398-001	Set screw
19	126533-001	Timing belt
20	127789-000	Driving shaft
21	048100-142	Stop ring
22	047402-542	Spring pin
23	126558-000	Driving shaft bushing, right
24	127690-000	Driving shaft bushing, left
25	X77081-000	Needle bar eccentric wheel
26	012500-632	Set screw
27	138839-000	Needle bar rod
28	138875-001	Rod shaft
29	048060-342	Stop ring
30	X05286-001	Driving arm bushing
31	014400-332	Set screw
32	X77084-000	Needle bar driving lever
33	126702-000	Needle bar bushing, upper
34	138876-001	Needle bar rod shaft
35	X77085-001	Thread take-up
36	028040-242	Spring washer
37	060670-812	Set screw
38	126782-001	Needle bar connecting link A
39	X75650-001	Needle bar
40	126656-001	Needle bar connecting stud
41	014060-632	Set screw
42	126703-000	Needle bar bushing, lower
43	X75205-001	Needle clamp
44	X75972-001	Needle bar thread guide
45	X76215-001	Set screw
46	016400-632	Set screw
47	X75577-014	Needle #90
48	X77113-000	Upper knife eccentric wheel
49	127795-000	Upper knife driving lever guide
50	127805-001	Upper knife driving lever
51	X77116-001	Upper knife driving arm
52	X77118-001	Upper knife presser spring
53	X77117-001	Upper knife holder
54	X77119-001	Upper knife
55	025040-232	Washer
56	X75246-001	Nut
57	060400-812	Set screw
58	X77132-001	Upperlooper shaft lever
59	127656-001	Upper knife holder guide shaft
60	127669-001	Upper knife holder guide

Ref. No.	Parts No.	Parts Name
61	126595-000	Driving arm bushing, left
62	048070-342	Stop ring
63	126594-000	Driving arm bushing, right
64	X77121-000	Lower knife holder
65	X77122-001	Lower knife control shaft
66	X77087-001	Needle plate
67	X77126-001	Lower knife control spring
68	X77125-001	Holder guide shaft
69	048040-342	Stop ring
70	014300-332	Set screw
71	X77123-001	Lower knife control knob
72	061400-805	Machine screw
73	X05007-001	Lower knife
74	100032-003	Set screw
75	060400-606	Set screw
76	X77127-001	Needle guard
77	060300-616	Set screw
78	X77124-001	Knife dial seal
79	X77095-001	Fixed needle guard
80	X77094-001	Stitch tongue
81	X77055-001	Cloth plate cover stopper
82	X77093-000	Stitch finger release lever
83	X76230-001	Thread tension release block
84	X77049-000	Needle plate base
85	062402-005	Set screw
86	X77092-001	Stitch plate spring
87	X77110-001	Differential feed lever shaft
88	X77091-000	Stitch holder
89	062300-406	Set screw
90	025080-132	Washer
91	X77103-001	Feed bar lever
92	X75080-001	Driving lever shaft
93	048070-142	Stop ring
94	X77104-001	Feed bar shaft
95	X75150-001	Collar
96	X77214-001	Feed pitch scale plate
97	062300-604	Set screw
98	X77105-001	Main feed dog
99	047200-842	Spring pin
100	127558-001	Spring
101	X05008-001	Feed link bushing
102	127559-000	Feed adjusting cam
103	047201-442	Spring pin
104	X05001-001	Feed adjusting shaft
105	025350-132	Washer
106	X77102-000	Feed link
107	X77107-000	Differential feed link
108	127560-001	Feed adjusting shaft
109	X77106-000	Differential feed bar
110	138895-001	Differential feed dog
111	138867-001	Guide shaft
112	X77111-000	Slide block
113	X77108-000	Driving control lever
114	X77109-001	Driving control spring
115	126863-002	Spool cushion
116	X77099-000	Main feed bar
117	X77265-001	Set screw
118	X77101-000	Feed eccentric wheel
119	114255-003	Cap
120	126872-000	Vertical feed lever

Ref. No.	Parts No.	Parts Name
121	127801-001	Vertical adjusting shaft
122	X75721-001	Set screw
123	138868-001	Main feed bar shaft
124	138869-001	Differential feed guide shaft
125	X05041-000	Sponge
126	X77180-001	Looper thread take-up A
127	127786-001	Upperlooper shaft
128	127785-001	Upperlooper stud shaft
129	025710-235	Washer
130	X76766-001	Upperlooper shaft guide
131	X75971-001	Upperlooper thread guide
132-1	X75209-001	Upperlooper (640D)
132-2	X77134-001	Upperlooper switch assembly (PL-1050)
133	127784-001	Guide shaft
134	X76931-001	Spring washer
135	126611-000	Looper lever bushing, back
136	126610-000	Looper lever bushing, front
137	X76339-000	Looper lever shaft
138	X77145-000	Upperlooper balance
139	X77144-000	Upperlooper eccentric wheel
140	062670-312	Set screw
141	062670-612	Set screw
142	X77150-000	Lowerlooper balance
143	X75391-001	Double chain looper rod
144	X75317-001	Stud screw
145	X77149-000	Lowerlooper eccentric wheel
146	X05077-001	Lowerlooper lever
147	X05281-001	Washer
148	X75388-001	Movable needle guard B
149	X77137-001	Lowerlooper thread through-feed assembly
150	X77340-001	Lowerlooper
151	X77207-000	Looper thread take-up B
152	017501-615	Set screw
153	X77056-001	Belt cover
154	025040-332	Washer
155	X57554-051	PW switch key-top
156	X77048-001	Oil pan
157	X75545-000	Cushion A
158	X75546-000	Spacer
159	X75720-001	Set screw
160	X77052-001	Cloth plate cover spring
161	X77242-001	Cloth plate cover assembly
162	X77054-001	Hinge pin
163	037300-815	Set screw
164	X77057-001	Motor cover
165	062401-206	Set screw
166	126850-000	Washer
167-1	X77042-001	Front cover (640D)
167-2	X77360-001	Front cover (PL-1050)
168	X75632-001	Front cover hook
169	X77044-001	Front cover hinge plate
170	126519-000	Front cover spring
171	X77045-001	Front cover guide shaft
172	048020-346	Stop ring
173	X75984-001	Lowerlooper screw cover
174	103741-001	Set screw
175	203735-001	Spring washer
176	100197-004	Washer
177	X77239-001	Rear cover
178	X77063-001	Lamp cover

Ref. No.	Parts No.	Parts Name
179	138853-001	Set screw
180	X77161-001	Thread take-up cover
181	X77184-001	Spool stand assembly
182	X75770-001	Set screw
183-1	X77151-001	Panel assembly (640D)
183-2	X77361-001	Panel assembly (PL-1050)
184-1	X77167-001	Needle tension dial, left
184-2	X77167-002	Needle tension dial, right
184-3	X77167-003	Upperlooper tension dial
184-4	X77167-004	Lowerlooper tension dial
185	X76882-001	Dial clutch
186	026020-235	Washer
187	037200-615	Set screw
188	X76883-001	Spring
189	048030-342	Stop ring
190	X77215-001	Tension control bracket assembly
191	X77174-001	Tension spring S
192-1	X77165-001	Tension spring
192-2	X76015-001	Tension spring
193	X75992-001	Spring washer
194	X76878-000	Tension control nut
195	X76879-000	Washer
196	047251-042	Spring pin
197	X76877-001	Tension release mechanism
198	X77236-000	Tension disc A
199	X77235-000	Tension disc
200	X77175-001	Tension release shaft
201	X77339-001	Release spring
202	X77163-001	Tension control knob bottom plate
203	X77176-001	Tension release lever
204	X77177-001	Spacer
205	X77058-001	Handle plate
206	X77183-001	Spool stand base
207	X76930-001	Spacer
	X77228-001	Motor (110/120V area)
	X77233-001	Motor (Canada)
	X77308-001	Motor (220V area)
	X77222-001	Motor (230V area)
	X77247-001	Motor (U.K., Australia, New Zealand)
	X77250-001	Motor (dual voltage)
	J01780-051	Foot controller (110/120V area)
	J01434-051	Foot controller (Canada)
	J01590-051	Foot controller (220/230V area)
	J01664-051	Foot controller (U.K.)
	J01665-051	Foot controller (Australia, New Zealand)
	J02127-051	Foot controller (dual voltage)
	126736-001	Soft cover
	122991-002	Accessory bag
	X75902-001	Tweezers
	X75904-000	Thread net
	X77260-000	Thread spool cap
	X75437-001	Screw driver (small)
	X75917-001	Needle set (#80/#90)
	X75906-001	Cleaning brush
	X77128-001	Hexagonal (allen) wrench

Ref. No.	Parts No.	Parts Name
	X55468-051	Screw driver (large)
	X77283-001	Trim trap
	X76590-002	Blind stitch foot
	X76663-001	Elastic taping foot
	X76670-002	Pearl sequence foot
	X76668-002	Piping foot

640D/PL-1050
T3070152
Printed in Japan